R.1562/23.—18091.

A.

	Drawing No.
Adjustable Lamp Bracket. General	✓ A 18
„ „ „ „	A 55
„ „ „ „	~~A 280~~
„ „ „ Clamp for 4″ x 2″ Channel	✓ F 964
Anchor Post, for Concrete Foundations	H 173
Annett Lock & Switch in 110v Track Feed Box	A 176
„ „ H.T. Fuses & 2 Relays in C.I. Case	✓ B 144
„ „ on Tappet of Cam & Tappet Interlocking Machine	B 216
„ „ on Circuit Controller (3 way) in Wooden Case	B 373
Arm, Cross—for Telegraph Pole. 4 & 6 Way	F 1412
„ „ „ „ „ P.M.G. Type	✓ F 1464
„ for Rocking Shaft Leadout	H 187
„ „ Semaphore, Enamelled Steel	✓ H 156
„ Crank for Mechanism at Foot of Mechanical Signal	F 1480
„ Fixed. Mounting for	B 133
Armour Clamp for 2,200v Cable Bond	A 315
Aspects & Ordering Numbers for Signals	B 400

B.

	Drawing No.
Base, C.I. for 5″ Pipe Mast on Bridge	✓ F 74
„ C.I. for 6½″ Pipe Mast on Concrete Foundation	F 83
„ C.I. for 6″ Pipe Mast on Concrete Foundation	✓ F 159
„ C.I. Bracket for 5″ Pipe Mast on Wall	F 94
„ Cover, C.I. for 5″ Pipe Mast	✓ F 167
Battery & Relay Box, B.S.C. Cells or Gravity & 6 D.C. Relays	A 123
„ Box, C.I. for 4 Caustic Soda Cells	A 344
Bell, Double Pole Ringing Key for	✓ A 303
„ A.C.	B 135
„ D.C.	✓ A 329
Binding, Post	A 2
Block, Terminal, 2 Binding Posts	A 2
„ „ 6 Binding Posts	✓ F 1527
„ Fuse	✓ A 45
„ Joint, Wooden, 100 lb. “P” with 100 lb. “M”	✓ B 201
„ „ „ 80 lb. “O” Rail	✓ H 31
„ „ „ 75 lb. “H” Rail	✓ H 32
„ „ „ 100 lb. “P” Rail	✓ H 33
„ „ „ 60 lb. “O” Rail	✓ H 39
„ „ „ 75 lb. “I” Rail	✓ H 40
„ „ „ 66 lb. “F” Rail	✓ H 41
Bolts, Hook Standard	B 344
„ L Standard	F 1497
„ U Standard	F 198
Bond, Armour Clamp for 2,200v Cable	A 315
„ Impedance, Layout and Connexions	B 332
„ U Type & Bond Ends	B 401
Box, Battery. *See* Battery.	
„ Cable Housing & Terminal. *See* Cable.	
„ Track Feed. *See* Track Feed.	
„ Terminating. *See* Terminating.	
„ Power Distribution. *See* Power Distribution.	
„ Relay. *See* Relay.	
Bracket. *See also* Clamp & Support.	
„ Adjustable Lamp, General	A 18
„ „ „ „	A 55
„ „ „ „	~~A 280~~
„ Adj. Lamp, Clamp for 4″ x 2″ Channel	F 964
„ Terminating for “A” Insulators on Cross Arm	F 1508
„ Transposition	F 1463
„ for Mechanism at foot of Mechanical Signal	A 328
Bus Bar, Insulators for Oil Switch Bus-Bar Chamber	B 419

C.

	Drawing No.
Cabinet or Case for Relays. *See* Relay.	
„ for Storage of Electric Lamps	H 236
Cable Glands	B 445
„ Housing Box, Wood, (26 to 128 Pairs)	B 469
„ Terminal Box, C.I. (26 to 128 Pairs)	M 44
Carrier, A.F., for Point Rodding, Transverse	A 80
„ „ „ „ „ Details	A 286
„ „ Special, to carry Wooden Cover	H 42
„ „ for Point Rodding. Straight	H 127
„ „ Concrete Foundations for	A 301
Chamber.—Inspection for 8 & 12 Leads Point Rodding	A 311
„ „ „ 1 & 4 Leads Point Rodding	K 98
„ „ „ Cranks	K 98
„ „ Concrete Foundations for	K 97
Circuit Controller. *See also* Contact or Detector Box.	
„ „ for Interlocking Machine (6, 12, or 18 way)	D 2
„ „ (3 way)	B 256
„ „ for Light Signal for Tramway	F 827
„ „ General Ordering List	F 262
„ „ D2 attached to 6A Interlocking Machine	F 116
„ „ „ „ „ Type A Interlocking Machine	F 117
„ „ „ „ Lever, Giving Adj. Travel	F 189
„ „ B 256 attached to Lever	F 258
„ „ „ „ „ Mechanical Balanced Arm	F 257
„ „ „ operated by Annett Lock	B 373
„ „ Miniature Lever Type, Hand Operated	B 463
„ „ Contact Bands for	A 69
Clamp. *See also* Support & Bracket.	
„ for Adj. Lamp Bracket on 4″ x 2″ Channel	F 964
„ for ¾″ pipe Handrail to 5½″ dia. Mast	A 73
„ Bond for 2,200v Cable Armour	A 315
„ for 5½ dia. Mast, General use	B 11
„ „ 4″ to 6½″ dia. Masts, Handrails, &c.	F 934
„ „ Telegraph Gross Arms on P.M.G. Poles	F 1479
„ „ „ „ „ V.R. Poles	A 321
„ „ „ Wire, Come-along Type A	F 1468
„ „ „ „ „ „ B	A 355
Clearance Diagram, Australian Standard 1923	F 1577
„ „ for C.I. Relay Box	F 1578
„ „ „ „ „ „ on Mast	A 309
„ „ „ 2,200v Track Feed Box	F 87
„ „ „ Ground Signals, Pipe & Bracket	H 162
Clip for Landings & Handrails on Pipe Masts	B 79
„ Adj. for Crank Arm	A 52
„ Saddle for 80 lb. Rail with Check Rail	N 15
„ „ „ 100 lb. Rail with Check Rail	N 16
„ for Outside Lock Bar	K 90

C.—(*continued.*)

	Drawing No.
Compensator, Type C, Standard	B 447
Connecting Rods. *See* Rods.	
,, Strips for Fuse &/or Terminals	F 134
Contact Bands for Circuit Controller	A 69
Contact Box. *See also* Circuit Controller.	
,, ,, ,, ,, Detector Box.	
,, ,, for Catch Rod & Lever	B 377
,, ,, ,, ,, ,, ,, Application	F 1024
,, ,, ,, ,, ,, Bowden Wire Type	J 3
,, ,, ,, Point Detection	J 2
,, Springs, Large Electric Staff Inst.	F 1458
,, ,, Miniature Electric Staff Inst.	F 1459
Controller. *See* Circuit Controller or Reverser.	
Couplings, Adjustable Jaws, ⅜″, ½″, ⅝″, and ¾″ Spl.	A 77
,, ,, ,, ¾″ and 1¼″	B 37
,, Solid Jaws, ¾″ and 1¼″	B 38
,, ,, ,, Special Sizes, 1¼″	H 186
,, Eyes, ½″, ⅝″, ¾″, and 1¼″	B 38
,, Turnbuckle or Barrel, ¾″ or 1¼″	B 37
,, for ¾″ & 1½″ Flex, Conduit, Screwed, ¾″, 1″, & 1½″ Gas	F 129
,, ,, ¾″ & 1″ Flex, Conduit, Screwed, ¾″, 1″, & 1½″ Gas	B 157
,, for 2A Machine, G.R.S. for 1½″ Flex	F 168
Cover, Concrete, for Rod and Wire Leads	B 253
,, for Base of 5″ Pipe Mast	F 167
Cranks for Compensator	B 447
,, ,, Cottew Gates, Lift Type	F 1591
,, Adj., Clip for	A 52
,, & Stand Complete, 1 way, Horizontal	F 1612
,, ,, ,, 1 ,, ,, Single Shear	F 1613
,, ,, ,, 2 ,, ,,	F 1614
,, ,, ,, 1 to 4 way, Vertical	F 1615
,, Detail, Plain, 12″ x 12″ & 12″ x 15″	F 1616
,, ,, ,, 12″ x 20″ & 15″ x 15″	F 1617
,, ,, Adj., 12″ x —, Types A & B	F 1618
,, ,, Tee, 10″ x 10″ x 10″ & 12″ x 12″ x 12″	F 1619
,, ,, Cross-Bar, 12″ x 12″ & 12″ x Adjusting Length	F 1620
,, ,, Accommodating & Relief	F 1621
,, ,, Signal Wire & Selective Lock Bar	F 1622
,, ,, Strapped, 10″ x 10″ & 15″ x 15″	F 1623
,, Inspection Chamber for	K 98
,, Concrete Foundation for Inspection Chamber for	K 97
Crank Stand, Horizontal, 1 way Type C	H 227
,, ,, ,, 2 way Type C	F 1594
,, ,, ,, 1 way, Round Base & Accom. Base	H 276
,, ,, Vertical, 1 way (Replacements only)	A 351
,, ,, ,, 1 way Bearing Arm	A 312
,, Arm for Mechanism at Foot of Post	F 1480

D.

	Drawing No.
Derail, Layout of, with P.C. Box & Detector	C 17
Detector Box. *See also* Contact Box & Circuit Controller	
,, ,, Hudd & Wion Type, List of Parts	A 138
,, ,, ,, ,, ,, Assembly	L 1
,, ,, ,, ,, ,, Guards for Blades	B 412
,, ,, ,, ,, ,, Independent Plunger for	A 358
,, Rods. *See* Rods.	
,, Slides, for Single Slide, Detector	B 45
,, ,, ,, Hatchet Detector	A 337
,, Single Slide, Assembly	B 48
Diagram, Clearance. *See* Clearance Diagram.	
,, Illuminated for Cabin, Type C	K 4
Disc, Signal, Case & Font for Oil	A 314
,, ,, ,, converted to Electric Light	B 353
,, Spectacle for Dwarf Semaphore	B 85
Dwarf Semaphore, Concrete Foundation for	B 145

E.

	Drawing No.
Earth Plates	F 1686
Earthing Device, Spark Gap	H 119
,, ,, ,, ,, Method of Connecting	F 172
Extension Piece for Point Blades	F 1301
,, ,, Position of Holes in Blades for	C 21
Eye Connexions, ½″, ⅝″, ¾″, & 1¼″	B 38

F.

	Drawing No.
Fixed Arm, Mounting for	B 133
Flexible Connexions, Layout of, for Track Apparatus	B 162
,, ,, Couplings, for ¾″ x 1½″	F 129
,, ,, ,, ,, ¾″ & 1″	B 157
,, Coupling for 2A Machine G.R.S. for 1½″ Flex.	F 168
Foundation, C.I. for Signal Ladder	F 1242
,, Concrete, for Point Rodding	A 301
,, ,, ,, Signal Masts	B 117
,, ,, ,, Dwarf Semaphore	B 145
,, ,, ,, Cranks, Compensators, &c.	H 173
,, ,, ,, Junction, Transfm., & Controller Boxes	F 1452
,, ,, ,, T Crank in Point Rodding	K 97
,, Plates, for Point Layouts	B 42
,, ,, ,,	B 45
,, ,, ,,	A 358
,, ,, ,, Selective Lock Bar Cranks	A 352
Fuse Block	A 45
,, ,, Connecting Strips for	F 134
,, H.T. & Annett Lock in Relay Case	B 144

G.

	Drawing No.
Gates, Cottew, Lift Crank for	F 1591
,, Std. Pulleys & Sectors for	F 837
,, Stops, Type A	B 301
,, ,, ,, B, Assembly	B 392
,, ,, ,, M, Assembly	N 152
,, ,, ,, M, List of Parts	F 1033
,, ,, ,, M, Timber Collar	F 1298
,, ,, Operating Movement for	B 360
,, ,, ,, ,, ,, Application	F 989
,, Wicket, Method of Control	F 920
Glands for Armoured Cables	B 445

H.

Handrail Clamp, ¾" Pipe to 5½" dia. Mast	A 73
,, ,, for Flat Bar on 4" to 6½" dia. Mast	F 934
Hook Bolts, Standard	B 334
House, Concrete, for Relays & Oil Switches	A 306
,, ,, Weathercap for Trunking	A 317

I.

Illuminated Diagram, Type C	K 4
,, Letter "A"	B 361
,, ,, ,, Adj. Bracket for	A 280
Impedance Bond, Layout in Track & Connexions	B 332
Indicator, for Points, Arrow Type, Assembly	A 285
,, ,, ,, ,, ,, Typical Application	F 828
Inlet Plate on Relay Box	A 173
Inspection Chamber for 8 & 12 Leads Point Rodding	A 311

I.—(*continued.*)

	Drawing No.
Inspection Chamber for 1 & 4 Leads Point Rodding	K 98
,, ,, ,, Cranks	K 98
,, ,, Concrete Foundations for	K 97
Insulating Base, Porcelain, for 2 Binding Posts	A 2
,, ,, ,, ,, Fuse	A 45
,, Joint. *See* Joint.	
Insulators for Oil Switches & Transformers	B 419
Interlocking Machine, Electro-Mech., G.R.S. & V.R.	E 111
,, ,, ,, ,, ,, ,,	K 116
,, ,, Mechanical, Type A, Cam & Tappet	L 8
,, ,, 6A Cam Locking, Isometric Drg.	C 95
,, ,, "Not Wired" Lever Plate for	F 1245
,, ,, Arrangement of Cabin Timbers for	F 1491

J.

Jack Frame for Cable Drums	B 454
Jaws, Adjustable, ⅜", ½", ⅝" & ¾" Special	A 77
,, ,, ¾" & 1¼"	B 37
,, Solid, ¾" & 1¼"	B 38
,, ,, 1¼" Specials	H 186
Joint, Insulated Block, Wooden, 100 lb. "P" with 100 lb. "M"	B 201
,, ,, ,, ,, 80 lb. "O" Rail	H 31
,, ,, ,, ,, 75 lb. "H" Rail	H 32
,, ,, ,, ,, 100 lb. "P" Rail	H 33
,, ,, ,, ,, 60 lb. "O" Rail	H 39
,, ,, ,, ,, 75 lb. "I" Rail	H 40
,, ,, ,, ,, 66 lb. "F" Rail	H 41
,, ,, Rod, ¾", 1¼", or Channel	B 44
,, ,, Spreader for Class "X" Layouts	B 45
Junction Box for Pipes	B 115
,, ,, ,, ,, Concrete Foundation for	F 1452

K.

	Drawing No.
Key for Electric Ringing, Double Pole	A 303
,, & Lock, Std., Description & Use of	F 838
,, for Staff Lock, Master	H 35

L.

"L" Bolts, Standard	F 1497
Ladder for Signal Mast, C.I. Foundation for	F 1242
,, ,, Telegraph Pole, 16′ & 22′ Extension	B 430
Lamp, Electric, 5" Lens, White, Yellow, Green, or Red	A 17
,, ,, Clear 5" Lens & Backlight	A 293
,, ,, Storage Cabinet for	H 236
,, Oil, Type "A"	B 389
,, ,, Types "B," & "C"	B 452
,, ,, Case & Font for Point Indicator	A 289
,, ,, ,, ,, ,, Disc Signal	A 314
,, ,, ,, adapted for Electric Lamp for Disc Signal	B 353
,, ,, ,, ,, ,, ,, ,, Mechanical Semaphore	B 349
,, ,, ,, ,, ,, ,, ,, Point Indicator	B 352
,, Bracket, Adjustable, General	A 18
,, ,, ,, ,,	A 55
,, ,, ,, ,,	~~A 280~~
,, ,, ,, Clamp for 4" x 2" Channel	F 964
,, ,, for Case of Oil Lamp for Mechanical Semaphore	H 14
,, Holder, Screw Socket	A 58
Latch Contact Box, Bowden Wire Type	J 3
,, ,, ,, Floor Plate Type	B 377
,, ,, ,, ,, ,, ,, Application	F 1024
Leadout, Rocking Shaft, Arms for	H 187
,, ,, ,, Cap Bearing Pedestal for	N 162
Letter "A" Illuminated	B 361
,, ,, ,, Adj. Lamp Bracket for	A 280
Lever, Miniature, 6 pair Circuit Controller	B 463
,, Ratchet Quadrant	B 176
,, Quadrant, Straight Tail	H 23
,, Lock, A.C.	M 1
Lever Plate, "Not Wired," for Interlocking Machine	F 1245
Light Signals, Material Lists for	F 1023
,, ,, 5" Lens, Triangular, 3 Position	H 142
,, ,, ,, Vertical, 2 Position	H 143
,, ,, ,, ,, 3 Position	H 144

L.—(*continued.*)

	Drawing No.
Light Signals, 5″ Lens, Marker, or Fixed Light	H 145
„ „ „ Low Speed	B 109
Limit Gauges Std. Dim. of, for Shop Manufacture	F 133
Lock, Annett. *See* Annett Lock.	
„ Bar, Inside, Details	✓ A 267
„ „ „ Toggles for	A 287
„ „ „ Ferrules for Check Rail	B 190
„ „ „ Saddle Clip, 80 lb. Check Rail	N 15
„ „ „ „ „ 100 lb. Check Rail	N 16
„ „ Outside, Clip & Details for	K 90
„ „ Selective, Crank	F 1622
„ „ „ Base, Bearing & Arm	✓ A 352
„ „ „ Layout of	N 13
„ Box, for Adj. Lock Rod	B 34
„ Plunger. *See* Plunger Lock.	
„ Rod, for F.P., Staggered or Top & Bottom Snibs.. ..	F 1528
„ & Keys, Std., Description & Use of	F 838
„ Staff. *See* Staff Lock.	

M.

	Drawing No.
Masts, Assemblies for :—	
„ Signal Aspects & Ordering Numbers	B 400
„ 1 Arm Semaphore on Tramway Pole	B 99
„ 1 „ „ „ 5″ & 6″ Pipe	B 397
„ 1 „ „ „ Lattice Bracket & 5″ Pipe ..	B 103
„ 1 Unit Light, on 5″ & 6″ Pipe	B 398
„ 1 „ „ „ Lattice Bracket & 5″ Pipe	B 480
„ 2 Arm Semaphore on Tramway Pole	B 97
„ 2 „ „ „ 5″ & 6″ Pipe	B 396
„ 2 „ „ „ Lattice Bracket & 5″ Pipe ..	B 94
„ 2 Unit Light on Tramway Pole	B 369
„ 2 „ „ „ 5″ & 6″ Pipe	B 399
„ 2 Arm & Low Speed on Tramway Pole	B 98
„ 2 „ „ „ „ 5″ & 6″ Pipe	B 395
„ 2 „ „ „ „ Lattice Bracket & 5″ Pipe ..	B 94
„ 2 Unit Light & Low Speed on 5″ & 6″ Pipe	B 408
„ 2 „ „ „ „ „ Lattice Bracket & 5″ Pipe ..	B 478
Masts. Details.	
Base, C.I. for 5″ Pipe on Bridge	F 74
„ „ „ 6½″ Pipe on Concrete Foundation	F 83
„ „ „ 6″ Pipe on Concrete Foundation	F 159
„ „ Bracket for 5″ Pipe, on Wall	F 94
„ Cover, C.I. for 5″ Pipe	F 167
Clamp for ¾″ Pipe Handrail to 5½″ dia. Mast	A 73
„ 5½″ dia. Mast, General use	B 11
„ 4″ to 6½″ dia. Mast, Handrail, &c.	F 934
Clips for Landings & Handrails	B 79
Foundations, Concrete	B 117
Inspection, Step	A 324
Ladder, C.I. Foundation for	F 1242
Packing Piece on 4⅛″ dia. Mast to give 5½″ dia.	B 11
Wire Inlet for Pipe Mast from Piping	F 1295
„ „ Bracket Mast from Piping	B 161
Miniature Circuit Controller Lever	B 463
Motors, Valves for	H 188
Mounting for Fixed Arm	B 133

N.

	Drawing No.
Negative Switch for Tramway Crossing	H 155

O.

	Drawing No.
Oil Switch—Concrete House for	A 306
„ „ Porcelain Insulators for	B 419
„ „ 2 Sets of 3-way in Power Distribution Box.. ..	E 138
„ „ „ „ Track Feed Box	J 22
„ „ 1 Set of 3-way in Track Feed Box	C 37
Operating Movement for Gate Stops	B 360
„ „ „ Typical Application ..	F 989

P.

	Drawing No.
Packing Piece to increase 4⅛″ dia. Mast to 5½″ dia.	B 11
Pay out Reel for 12″, 18″, & 24″ dia. Coils	✓ A 333
Pedestal for Rocking Shaft Leadout	N 162
Pins, Standard Turned	F 52
„ for Cranks & Compensators, Type C	F 1437
„ „ Lift Crank for Cottew Gate Gear	F 1592
„ & Studs, General	H 183
„ „ „ „ Ordering List for	F 1682
Pipe and Channel Carrier, A.F. Transverse	A 80
„ „ „ „ „ Details	A 286
„ „ „ „ Special for Wood Cover	H 42
„ „ „ „ Straight	H 127
„ „ „ „ Foundation for	A 301
„ Junction Box	B 115
„ „ „ Concrete Foundation for	F 1452
Plunger Box for Adj. Lock Rod	B 34

P.—(*continued.*)

	Drawing No.
Plunger Guide	B 34
„ Central Snib, for Independent Lock	F 182
„ „ „ & H. & W. Detector Slot, Independent Operation	A 358
„ Staggered Snibs, for Escapement Lock	F 1401
„ Lock Lever, Guide for	B 338
Point Indicator Arrow Type Assembly	A 285
„ „ „ „ Typical Application	F 828
Point Layouts. *Class X. Assemblies.*	
Arrangement of Blades & Rodding for Junctions	B 251
Facing, with Inside Plunger & P.C. Box	C 30
„ „ „ „ Selective Lock Bar	N 13
Spur Lever with Plunger Lock	A 108
„ „ „ „ „	A 109
Trailing, with P.C. Box & Single Slide Detector	C 9
„ „ „ „ „ „ Compound	E 46
„ „ „ „ 2 Single Slide Detector Compound	F 1212
Class Y.—Mechanical Assemblies.	
Arrangement of Blades & Rodding for Junctions	B 251
Facing, with Outside Plunger & Hatchet Detector	C 38
„ „ S. & L.M. & H. & W. Detector	K 3
„ „ „ „ „ „ Compound	M 5
„ „ Inside Plunger, Temporary Work only	N 174
M.P.F. with Outside Plunger & P.C. Boxes	C 31
„ „ 2 Outside Plungers & P.C. Boxes	C 34
„ „ 2 S. & L.M. & H. & W. Detectors	K 96
Trailing, with P.C. Box & Single Slide Detector	C 18
„ „ „ „ „ „ Compound	E 47
Class Y.—Power Assemblies.	
G.R.S. Coys., Model "4" Machine	K 105
„ „ „ „ „ Compound	M 28
„ „ „ "5A" „	K 104
U.S.S. Coys., Style "M" Machine & H. & W. Detector	K 6
Westinghouse Style "C" Machine & H. & W. Detector	K 107
„ „ „ „ „ „ „ Compound	K 108
„ „ "M" „	N 183
„ „ "M" „ Compound	N 181
„ „ "M" „ Derail Switch	H 287
Point Layouts. Details. *See* Respective Headings.	
„ „ S. & L.M. for	D 6
„ „ Point Sections & Drillings of Toes	C 21
„ Rodding, Channel Section, & Fishplate	B 134
„ „ Drop-off Lug for	H 242
„ „ Concrete Cover for	B 253
„ „ Inspection Chamber for 8 & 12 Leads	A 311
„ „ „ „ „ 1 & 4 Leads	K 98
„ „ Insulated Joint for	B 44

P.—(*continued.*)

	Drawing No.
Point Rodding, Concrete Trunking for 8 & 12 Leads	H 210
„ „ „ „ „ 1 & 4 Leads	K 97
„ Rod Carrier A.F. Transverse	A 80
„ „ „ Details	A 286
„ „ Special to carry Wooden Cover	H 42
„ „ Straight	H 127
„ „ Concrete Foundation for	A 301
Pole—Telegraph, 80 lb. "K" Rail	A 321
„ „ Struts & Stays for	A 338
„ „ Cross Arm for, 4 & 6 way	F 1412
„ „ „ „ P.M.G. Type	F 1464
„ „ Assembly of General Fittings	F 1463
„ „ Clamps for Cross Arms on P.M.G. Poles	F 1479
„ „ Leading in	✓ A 334
„ Pike for Telegraph Pole	✓ A 313
„ „ Hoisting Block for, on 80 lb. Rail Poles	A 347
„ Changer Circuit Controller, on Mech. Balanced Arm	F 257
„ „ „ „ „ Interlocking Lever	F 258
Power Distribution Box, 1—6 K.W. Transformer	K 1
„ „ „ 2—6 K.W. Transformers	M 4
„ „ „ 2—1 K.V.A. Transformers	J 22
„ „ „ 1—3 K.V.A. Transformer	C 37
„ „ „ 2 sets of 3-way Oil Switches	E 138
Pulleys and Sectors, Standard for Gates	F 837
Push Button, 110v Spring	F 136
„ „ 110v Stick	J 9

Q.

	Drawing No.
Quadrant Lever, Ratchet	B 176
„ „ Straight Tail	H 23

R.

	Drawing No.
Reactance—Shielding. Assembly	A 129
Relay, D.C. 4 way, V.R. Type	C 33
„ Box, C.I. for 1 or 2 Relays	N 166
„ „ „ „ H.T. Fuses & Annett Lock & 2 Relays	B 144
„ „ Pipe Inlet Plate	A 173
„ Boxes Mounted on 6" Pipe of Signal Mast	✓ A 309
„ & Battery Box (Wood)	A 123
„ Box, Wood, Indoor Type	H 4
„ „ „ Outdoor Type, A	B 418
„ „ „ „ „ B	H 282
„ House, Concrete	✓ A 306
Repeater Circuit Controller on Semaphore Arm	F 257
Resistance Unit, Variable, 0·5 to 4 ohms.	B 351
„ „ Fixed, 2 ohms.	F 1685
Reverser, Reid's Patent	B 128
Rods, Connecting & Composite, General	✓ A 345
„ „ „ „	✓ A 361
„ „ „ 1¼" dia. Eye & Jaw Ends	A 332
„ „ „ „ „	A 339
„ „ „ Channel Eye & Jaw Ends	A 340
„ Detector	✓ A 337
„ Operating, S & L.M. & Power	✓ A 331
„ „ Derails & Direct	A 327
„ Lock	F 1528
„ Spreader, Ordering List	F 1240
„ „ Diagram of	F 1268
„ „ for Inside Plunger	B 183
„ Insulated Joints for	B 44
„ Ends for Point Layouts. (Lost Motion)	B 41
„ „ „ Detector. (Ball & Pin)	B 38
Roller Contact Bands for Circuit Controller	A 69

R.—(*continued.*)

	Drawing No.

S.

	Drawing No.
Screws, Std. B.A., Types of	F 833
Sectors & Pulleys, Standard for Gates	F 837
Semaphore. *Mechanical.—Details.*	
Bracket for Power Mech. at foot of Post	A 328
Crank Arm for Power Mech. at foot of Post	F 1480
Blade, Enamelled Steel	H 156
Oil Lamp, Type A	B 389
„ „ Types B & C	B 452
„ „ Case using Electric Lamp	B 349
Lamp Bracket for Case of Oil Lamp	H 14
„ „ Adj. for Types A & B	A 55
Spectacle, Type A for Plain Glass	H 235
„ „ B for Moulded Glass	B 455
Semaphore, Dwarf, Disc Spectacle for	B 85
„ „ Concrete Foundation for	B 145
„ *Power.—Details.*	
Coupling for 2A Machine, G.R.S. for 1½″ Flex	F 168
Mounting for Fixed Arm	B 133
Electric Lamp	A 17
Oil Lamp, Type A	B 389
„ Types B & C	B 452
Lamp Bracket Adj.	A 18
Spectacle, 3 Position, Type A	A 5
„ „ „ B	R S A 1041
Shackle Iron and Inlet Board Telegraph	F 1483
Signal Aspects & Ordering Numbers	B 400
Signal Cabin, Arrangement of Timbers for Interlocking Machine	F 1491
Spark Gap Earthing Device	H 119
„ „ „ Method of Connecting	F 172
Spectacle for Mechanical Semaphore, Type A	H 235
„ „ „ „ B	B 455
„ Dwarf Semaphore (Disc)	B 85
„ Power Semaphore Type A	A 5
„ „ „ „ B	R S A 1041

S.—(*continued.*)

	Drawing No.
Spreader, Ordering List & where used	F 1240
„ Sketch Diagrams	F 1268
„ for Inside Plunger, Class X Layout	B 183
„ for Class X Layouts, Insulated Joint for	B 45
Springs, Contact, for Large Electric Staff Inst.	F 1458
„ „ „ Miniature Electric Staff Inst.	F 1459
Staff, Plain, for Large Inst.	F 5
„ „ „ Miniature Inst.	K 22
„ Divided, for Large Inst.	F 1241
„ Composite, for Large Inst.	F 1247
„ Inst., Combination Gauge Plate, for Large Elect. ..	B 372
„ „ Yokes for Large Elect.	A 335
„ „ Stool for Miniature Elect.	F. 1292
„ Exchange Box, for Miniature Staff	K 50
„ Lock for Large Staff	B 186
„ Lock, Master Key for	H 35
„ Drawer Lock for Miniature Staff	K 22
Step for Inspecting Light Signals on Pipe Masts	A 324
Stretcher Bar for Inside Plunger, Class X Layout	B 183
Studs & Pins, General	H 183
„ „ „ „ Ordering List for	F 1682
Support. *See also* Bracket & Clamp.	
„ for Cable Jack	B 454
Switch Extension Piece, Ordering List	F 1301
„ „ „ Position of Holes in Blades	C 21
„ Negative, for Tramway Crossing	H 155
„ Oil. *See* Oil Switch.	
„ & Lock Movement, Type A	D 6
„ Special for Light Signal for Trams, Fixing Assembly ..	F 827
„ & Annett Lock in 110v Track Feed Box	A 176

T.

	Drawing No.
Telegraph Pole, 80 lb. K Rail	A 321
„ „ Struts & Stays for	A 338
„ Line Fittings :—	
Cross Arm, 4 & 6 way	F 1412
„ „ 6 way, P.M.G. Type	F 1464
General Pole Fittings, Assemblies	F 1463
Terminating Bracket for A Insulators	F 1508
Inlet Board & Shackle Irons	F 1483
Clamps for Cross Arms on P.M.G. Poles	F 1479
Telephone Transposition Scheme, Non-Phantomed Circuit ..	F 1630
„ Buzzer Type, V.R.	N 182
Terminal Block & 2 Binding Posts	A 2
„ „ „ 6 „ „	F 1527
„ Std. Types, Flat Punched, B.A. Thds.	F 202
„ Box for Telephone Cables, Outdoor Type	M 44
„ Connecting Strips for ..	F 134
Terminating Box, C.I. for 10 Twin Leads	B 54
„ „ „ „ 15 „ „	B 96
„ „ „ with Lighting Transformer	B 156
„ „ Wood, Indoor Type, 12 to 72 way	A 19
„ „ „ Outdoor „ 12 way	A 31
Tie Plates, List of Insulation for	F 130
„ Straps	B 42
Time Release, Operated by Mechanical Lever	B 140
Tolerances, Standards for Shop Manufacture	F 133
Tools.—General—	
Cable Jack Frame	B 454
Hoisting Block for Pole Pike on 80 lb. K Rail	A 347
Pay-out Reel	A 333
Pole Pike	A 313
Take-up Reel	H 247
Wire Clamp, Come-along Type A	F 1468
„ „ „ „ B	A 355
Track Feed Box, C.I. Assembly, 110v	B 125
„ „ Housing Annett Lock & Switch	A 176
„ „ „ Lighting Transformer	B 156
„ „ 2,200v with 2—1 K.V.A. Transformers ..	J 22
„ „ „ „ 3 K.V.A. Transformer	C 37
„ „ „ „ 6 K.V.A. Transformer	K 1
„ „ „ „ 2—6 K.V.A. Transformers ..	M 4
Train Stop, Layout in Track, G.R.S. Type	B 355
„ „ „ with Impedance Bond	B 332
„ „ Emergency, Hand Fixed to Sleeper	H 130
Transformer, Ferranti, Dimensions of various Sizes	A 275
„ Thordarson, Indication	F 732
„ Lighting, 110v —6v, on 5½″ dia. Mast	A 63
„ „ 110v—6v on Flat Mast	A 270

T.—(*continued.*)

	Drawing No.
Transformer, Point Detection, C.I. Case for	J 6
„ „ „ Foundation for C.I. Case ..	F 1452
„ Lighting Track Feed Box for	B 156
Trunking, Concrete, for 1 & 4 Point Leads	K 97
„ „ „ 8 & 12 Point Leads	H 210
„ Wood, for undergrounding 1 & 2 Lead Cables ..	F 1487
Turnbuckle, ¾″, & 1¼″ Whit	B 37

U.

U Bolts, Standard	F 198

V.

Valves for Motors	H 188
Ventilator, 2″ dia. for C.I. Boxes	A 68
„ 6″ x 2″ opening, Part 1A343 .. .. *See*	B 469

W.

	Drawing No.
Weathercap for ¾″ Flex. Conduit to 5½″ dia. Mast	A 43
„ „ „ „ 4⅛″ dia. Mast	A 44
„ „ ¾″ & 1½″ Flex. Conduit to 4⅛″ dia Mast ..	A 46
„ „ „ „ „ 5½″ dia. Mast ..	A 62
„ „ 1½″ Flex. Conduit to 5½″ dia. Mast	A 65
„ „ 1½″ Flex. Conduit to Signal Machine	F 168
„ „ 1½″ & 1½″ Flex. Conduit to 6½″ dia. Mast *See*	A309
„ Couplings for ¾″ & 1½″ Flex. Screw ¾″, 1″ & 1½″ gas	F 129
„ „ ¾″ & 1″ Flex. Screw ¾″, 1″ & 1½″ gas ..	B 157
„ or Wire Distributer, 1″ & 1½″ Pipe & 1″ Flex. ..	C 32
„ „ „ 1½″ Pipe & 1½″ or 1″ Flex. ..	H 231
„ for 1″ Pipe for Track Connexions	F 25
„ „ 2—1″ Pipes for Track Connexions	F 178
„ „ ¾″ Pipe for Track Connexions	F 735
„ „ 2—¾″ Pipes for Track Connexions	F 736
„ „ Trunking for ¾″, 1″, 1½″ & 2″ Pipes	F 67
„ „ „ „ Concrete House	A 317
Wicket Gates, Method of Control	F 920
Wire, Inlet Box for Bracket Mast	B 161
„ Distributer for Flex Conduit to Track Apparatus ..	C 32
„ „ „ „ „ „ ..	H 231
„ Inlet for Mast with Cast Concrete Base	F 1295
„ Clamp, Come-along Type A	F 1468
„ „ „ „ B	A 355
„ Lead, Concrete Cover for	B 253

X.

Y.

Z.

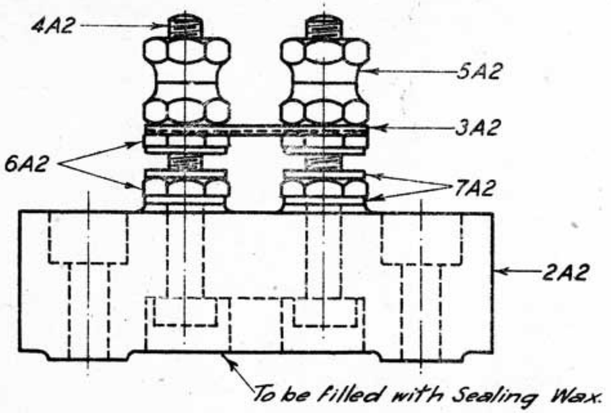

TERMINAL BLOCK COMPLETE — A2

No	NAME	MAT.L	QNTY.
2A2	Base	Porcelain	1
3A2	Connector	Brass	1
4A2	~~Bolt~~ Terminal	"	2
5A2	~~Binding Nut~~ Terminal Nut	"	4
6A2	Clamp Nut	"	4
7A2	Washer	"	6

25-5-29 A2

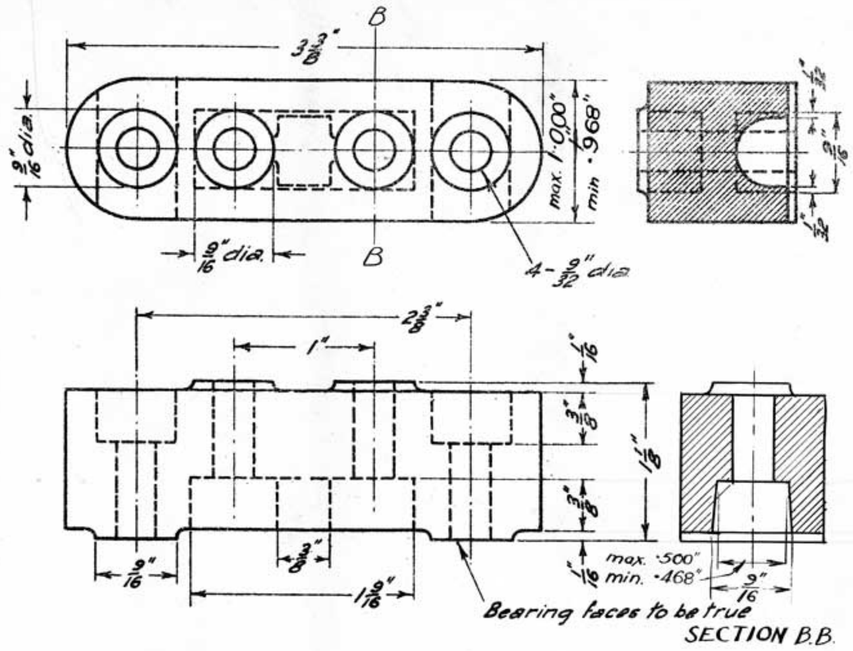

Porcelain
BASE

25-5-29 2A2

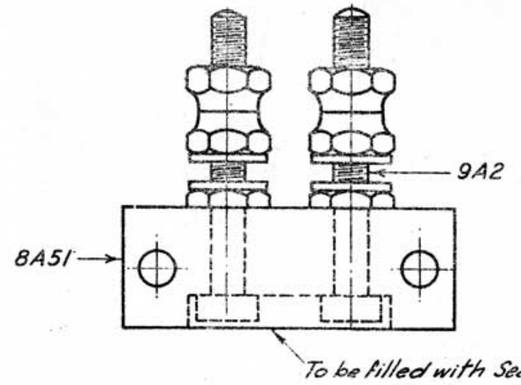

25-5-29 TERMINAL BLOCK COMPLETE 10A2

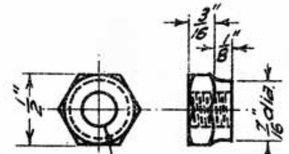

Brass
~~BINDING~~ TERMINAL NUT 5A2

25-5-29

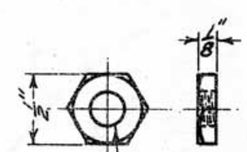

Brass
25-5-29 CLAMP NUT 6A2

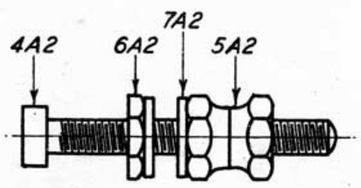

TERMINAL
~~BINDING POST~~ COMPLETE — 9A2

No	NAME	MAT.L	QNTY.
4A2	~~Bolt~~ Terminal	Brass	1
5A2	~~Binding Nut~~ Terminal Nut	"	2
6A2	Clamp Nut	"	1
7A2	Washer	"	2

25-5-29 9A2

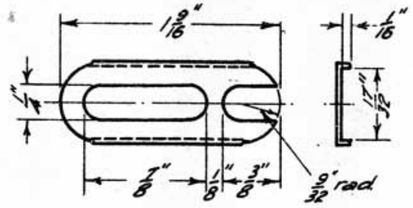

Nº19 S.W.G.

Brass
25-5-29 CONNECTOR 3A2

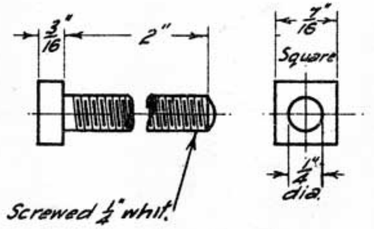

Note. Use 3/8" Sq. Brass Rod for 9A45 Fuze Blocks 10A45 Lightning Arresters.

Brass
~~BOLT~~ TERMINAL 4A2

25-5-29

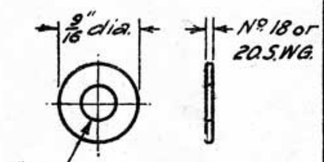

Brass
25-5-29 WASHER 7A2

Redrawn. Including Revision 1. Part Nº 8A2 deleted & Part Nº 10A2 added. Original under same number dated 11-12-16.

VICTORIAN RAILWAYS

TERMINAL BLOCKS

25-5-29

Chief Eng Sigs & Tels.	Drawn from Sample	Traced by L.J.P.

A2.

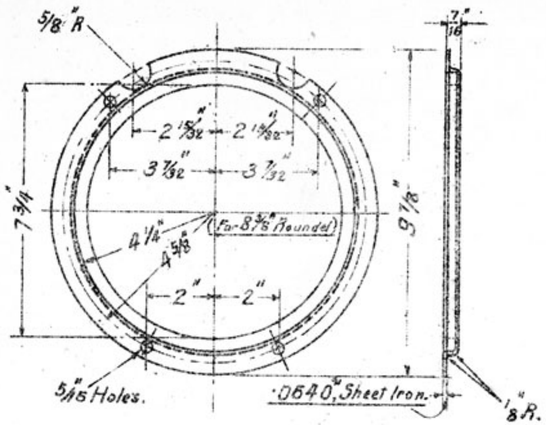

— SPECTACLE RING —

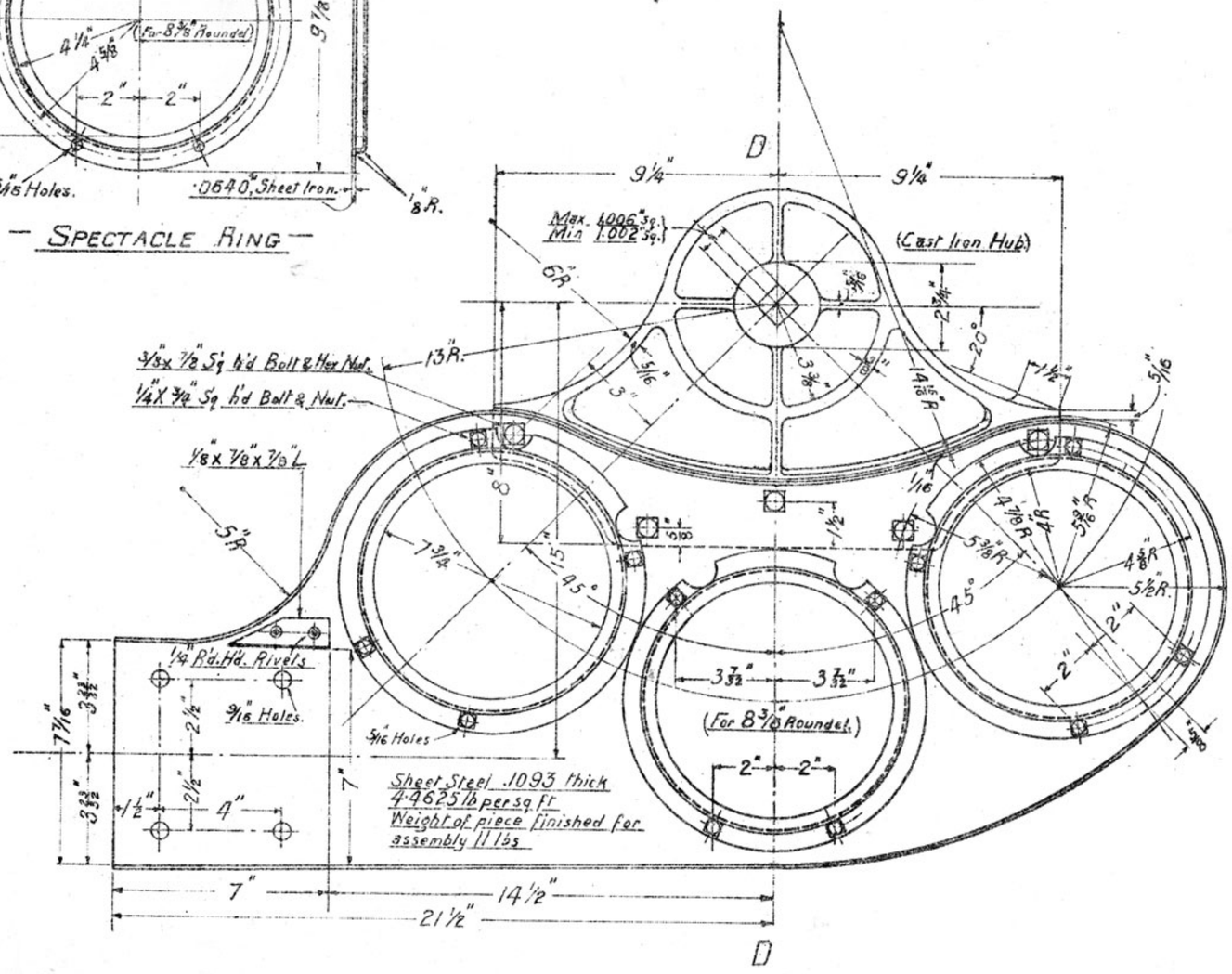

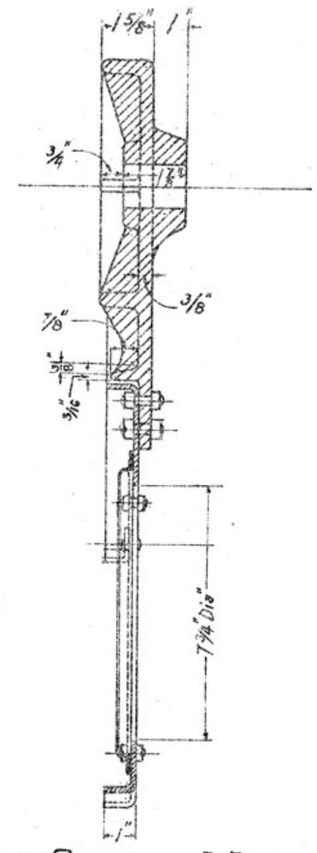

— SECTION DD —

Stores
Section ____
Item No ____

VICTORIAN RAILWAYS
SEMAPHORE SPECTACLE
Scale 3" = 1'0"
29-1-15

Drawn by	E.F.S.H.
Traced by	E.F.S.H.
Checked by	G.H.C.

3/4/15.
Engineer of Signals.

A5

3081/14

L.233/26

ELECTRIC SIGNAL LAMP COMPLETE WITH:-

5" Dia. Clear Lens 1A17
" Red " 2A17
" Yellow " 3A17
" Green " 4A17

No.	NAME	MATERIAL	QUANTITY
1B116	Base.	C.I.	1
2B116	Cover.	C.I.	1
3B116	Retaining Ring	Brass	1
5B116	Cover Pin.	M.S.	1
6B116	Lamp Base.	Wood	1
1A58	Lamp Holder.	-	2
Stock	Lens.	Glass	1
"	Packing Rings.	Asbestos	2
"	Cheese Headed Screws 1BA 5/16" long		4
"	Round Headed Screws 2BA 1" "		4
"	Chain. 13" long.		1
"	5/16 Hex. Setscrew 1/2" long		2

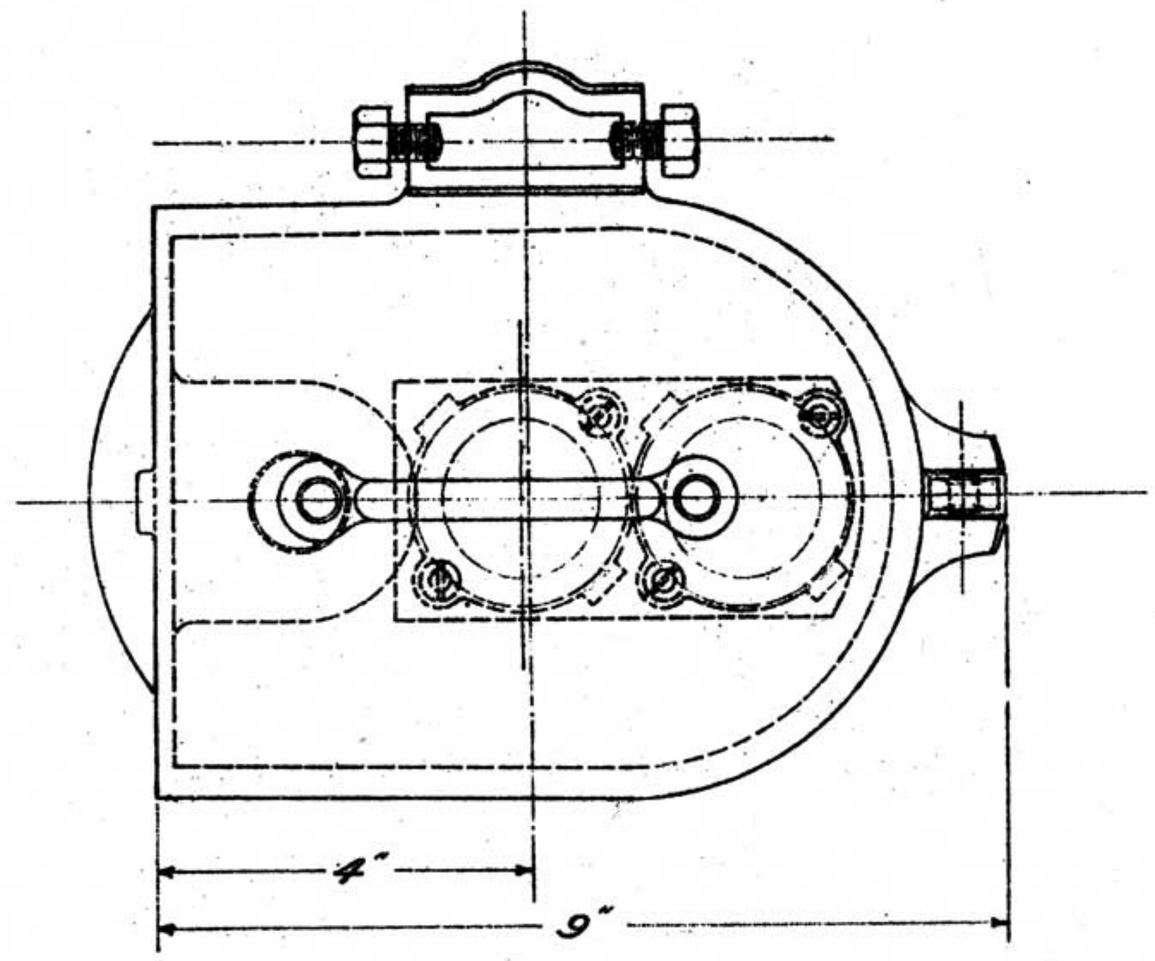

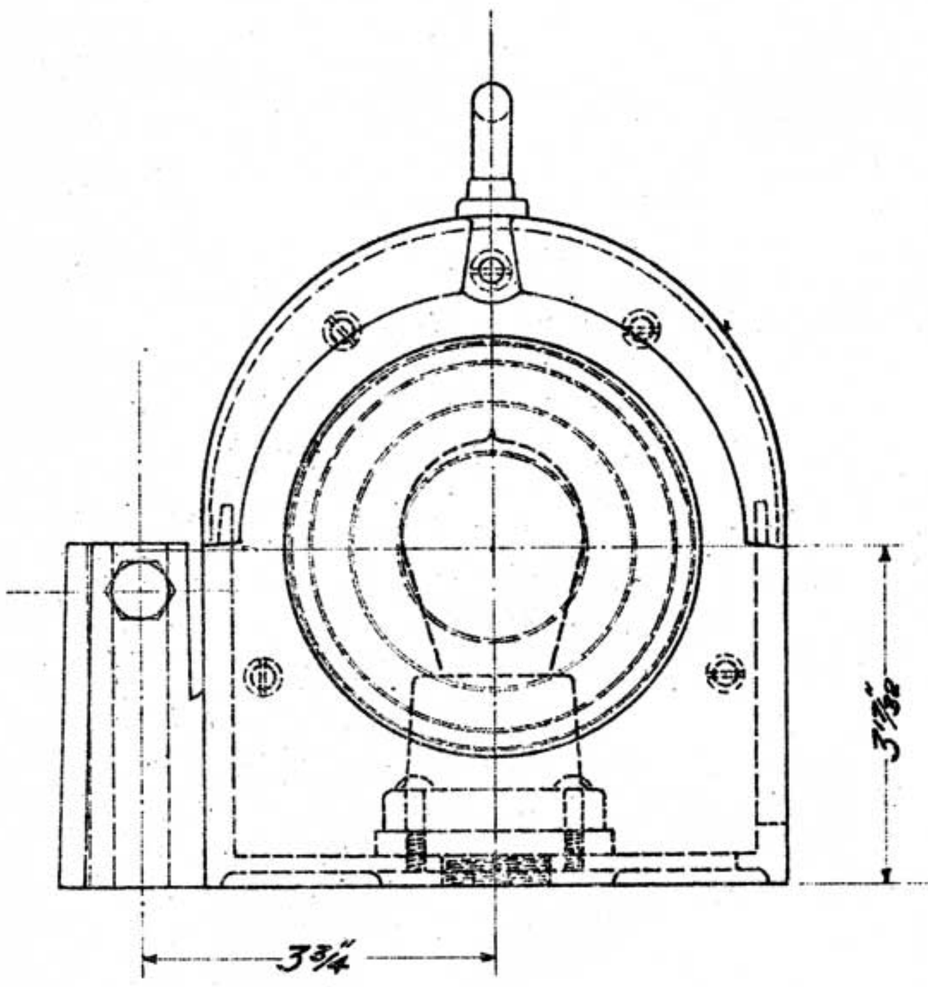

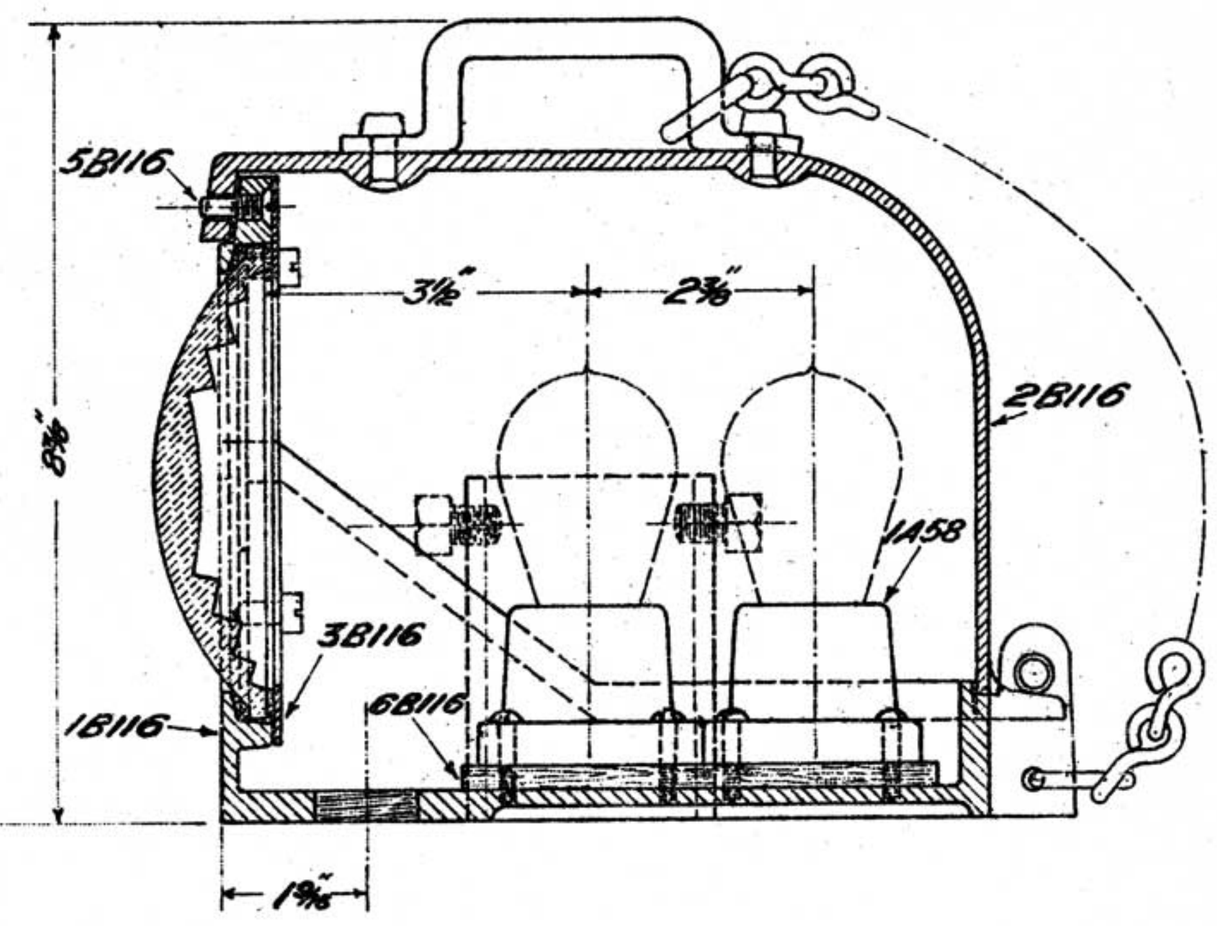

Stores
Section ____
Item N° ____

VICTORIAN RAILWAYS.
ELECTRIC SIGNAL LAMP.
GENERAL ASSEMBLY.

31.8.17

Engineer of Signals.

Drawn by W.J.V
Traced by W.J.V

A17

Redrawn 31.8.17.
Details transfered to B116.
Original under same title
dated 15.3.16

A17

L.233/26

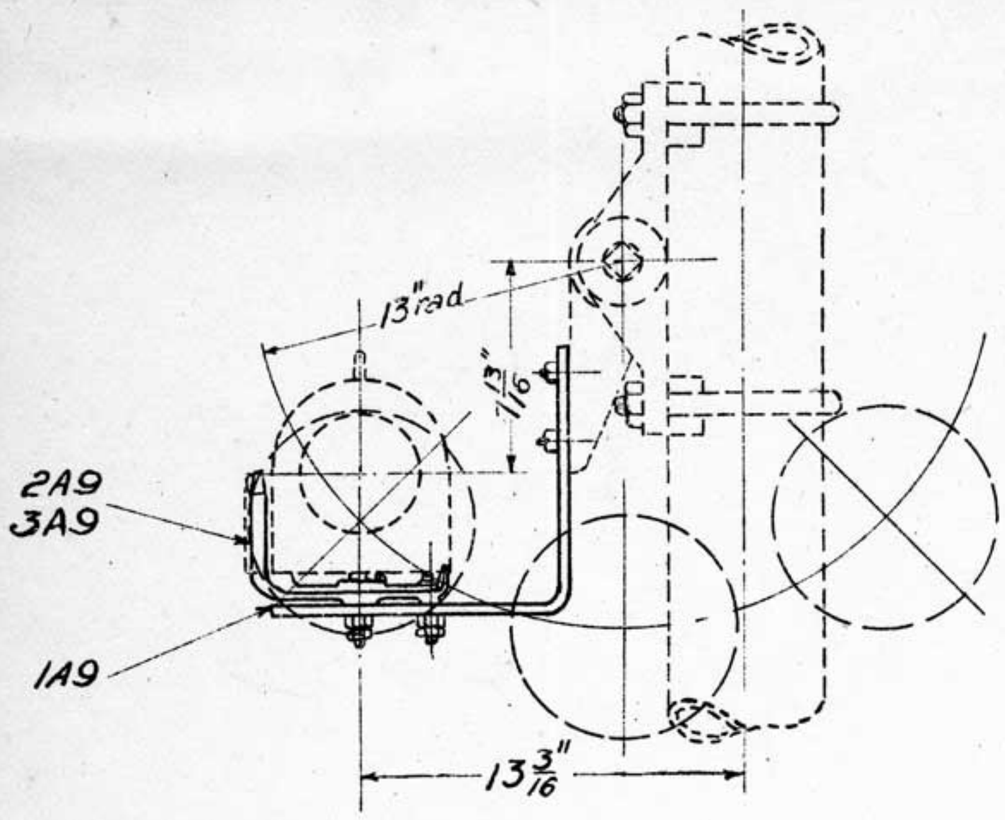

N°	NAME	Material	Quantity 1A18	Quantity 2A18
1A9	Support X = 5¾"	C.S.	1	—
1A9	" X = 7¾"	"	—	1
2A9	Upright	M.I.	1	—
3A9	"	"	—	1
Stock	½" Sq. Hd Bolt 2" long & Lock Nut	—	2	2
"	½" " " " 1½" " & Washer	—	2	2

ADJUSTABLE LAMP BRACKET Oil 2A18
22-5-24/Alt. 72. L.H. Active Light Electric 1A18

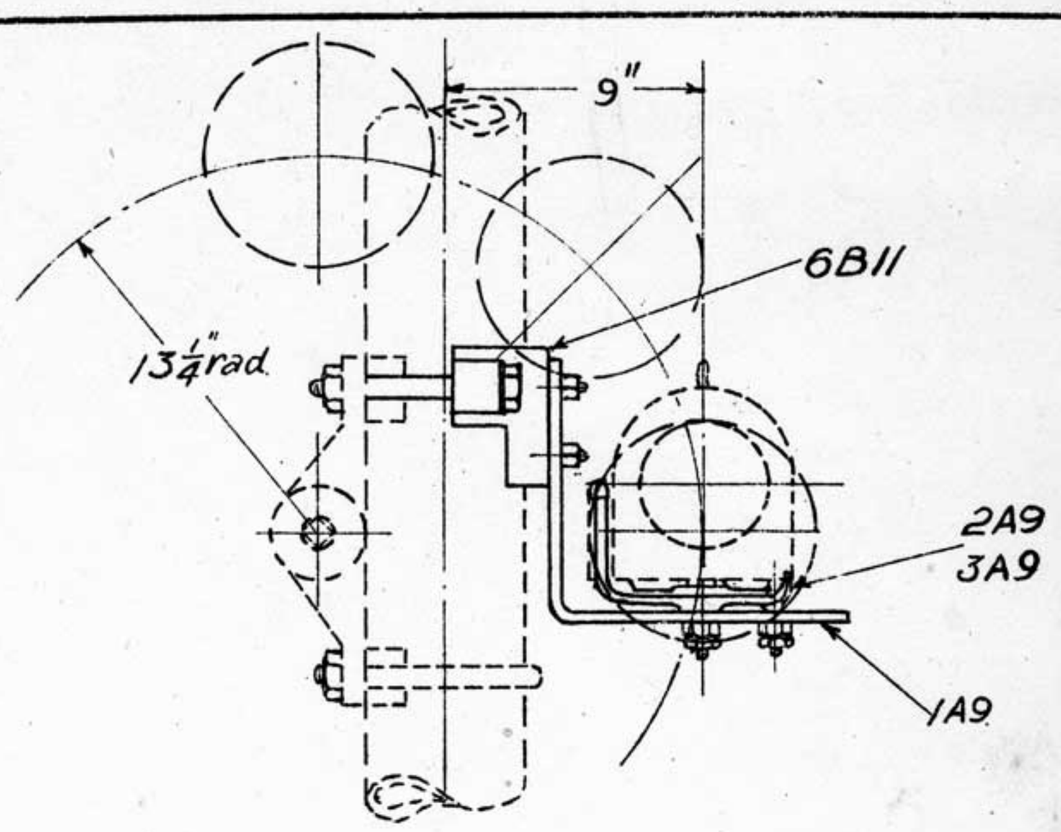

N°	NAME	Material	Quantity 5A18	Quantity 6A18
1A9	Support X = 5¾"	C.S.	1	—
1A9	" X = 7¾"	"	—	1
2A9	Upright	M.I.	1	—
3A9	"	"	—	1
6B11	Clamp	C.I.	1	1
Stock	½" Sq. Hd. Bolt 2" long & Lock Nut	—	2	2
"	½" " " " 1½" " & Washer	—	2	2
"	¾" Hex. " 7" " " "	—	2	2

ADJUSTABLE LAMP BRACKET Oil 6A18
22-5-24/Alt. 72. R.H. Active Light Electric 5A18

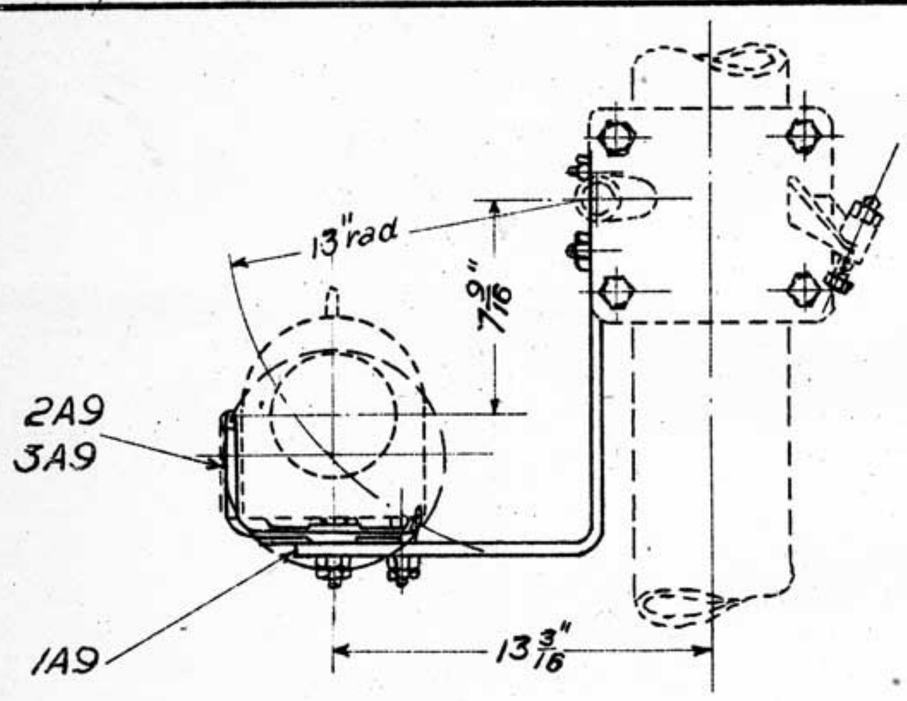

N°	NAME	Material	Quantity 3A18	Quantity 4A18
1A9	Support X = 10¼"	C.S.	1	—
1A9	" X = 12¼"	"	—	1
2A9	Upright	M.I.	1	—
3A9	"	"	—	1
Stock	½" Sq. Hd Bolt 2" long & Lock Nut	—	2	2
"	½" " " " 1½" " & Washer	—	2	2

ADJUSTABLE LAMP BRACKET Oil 4A18
22-5-24/Alt. 72. For Fixed Arm Electric 3A18

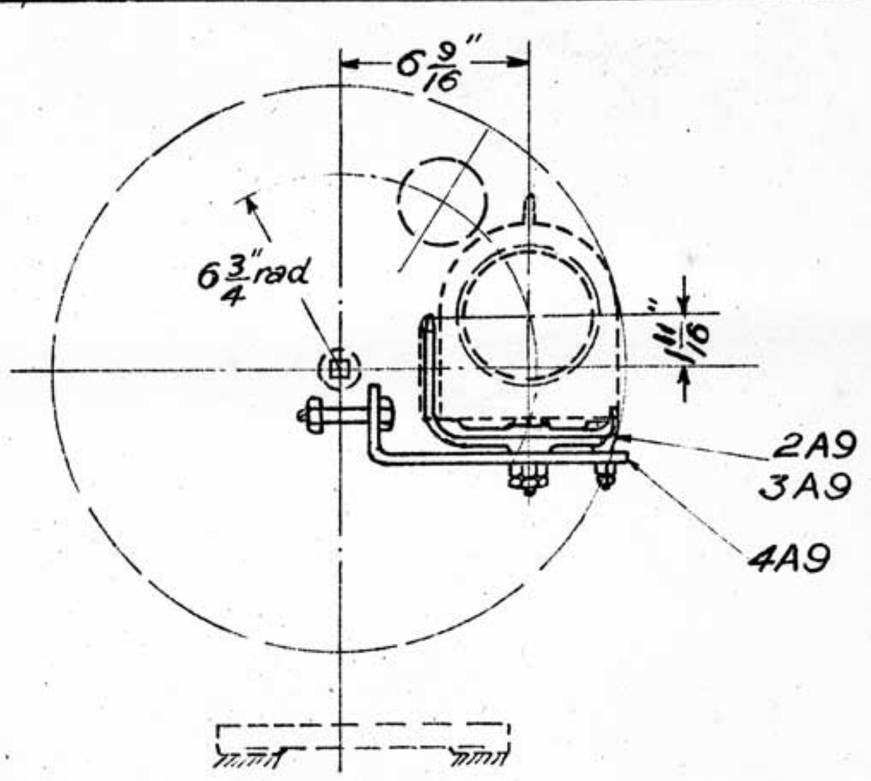

N°	NAME	Material	Quantity 7A18	Quantity 8A18
2A9	Upright	M.I.	1	—
3A9	"	"	—	1
4A9	Support X = 1⅛"	M.S.	1	—
4A9	" X = 3⅛"	"	—	1
※ Stock	½" Hex. Bolt 3¼" long	—	1	1
"	½" Sq. Hd. Bolt 2" long & Lock Nut	—	2	2

※ This Bolt supplied only with Power Operated Dwarf Semaphore.

ADJUSTABLE LAMP BRACKET Oil 8A18
22-5-24. For Dwarf Semaphore Electric 7A18

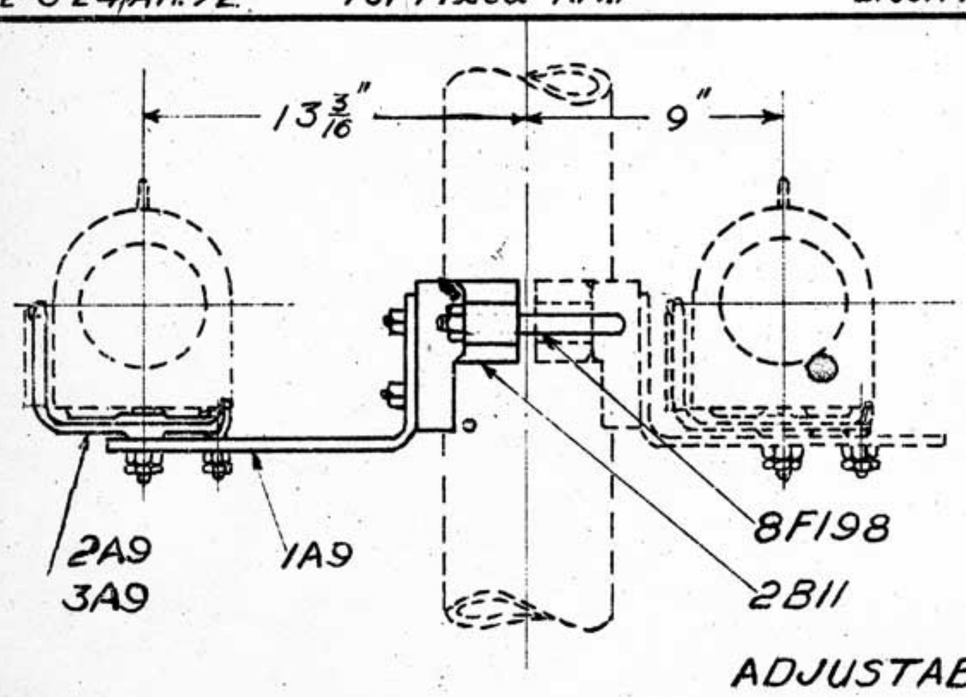

N°	NAME	Material	Quantity 9A18	Quantity 10A18
1A9	Support X = 1½"	C.S.	1	1
2A9	Upright	M.I.	1	—
3A9	"	"	—	1
2B11	Clamp.	C.I.	1	1
8F198	U. Bolt	M.S	1	1
Stock	½" Sq. Hd. Bolt 2" long & Lock Nut	—	2	2
"	½" " " " 1½" " & Washer	—	2	2

NOTE :- For fixing Marker Light on Bracket Mast see Drg A55.

ADJUSTABLE LAMP BRACKET Oil 10A18
22-5-24. For Marker Light, Low Speed Signal & Illuminated Letter A on Straight Mast. R.H. or L.H. Electric 9A18

A18

22-5-24.
Redrawn Including Revision 1. & Alteration N° 72
Original under same title & N° dated 5-6-17

VICTORIAN RAILWAYS
ADJUSTABLE LAMP BRACKET ASSEMBLIES
22-5-24.

Chief Engr of Sigs. & Tels.	Drawn by	Traced by
	L. J. P.	L. J. P.

A18

2086-2+

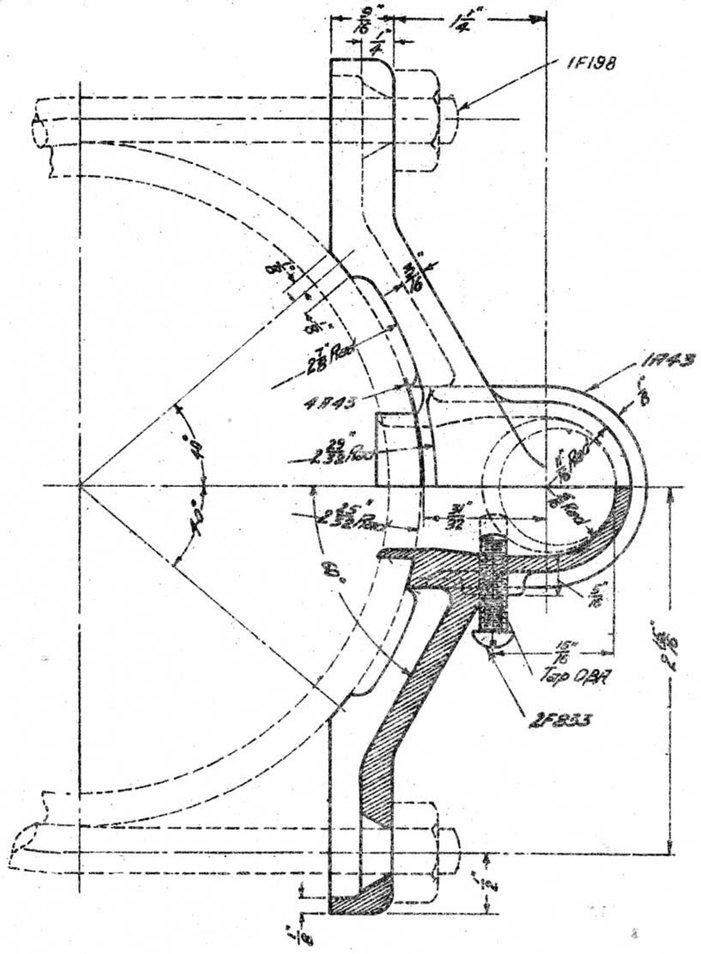

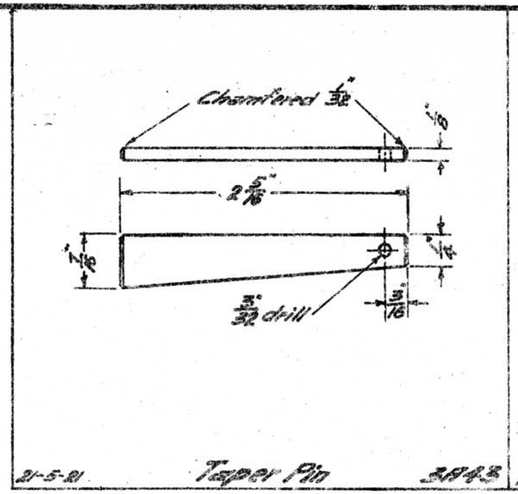

21-5-21 Taper Pin 3A43

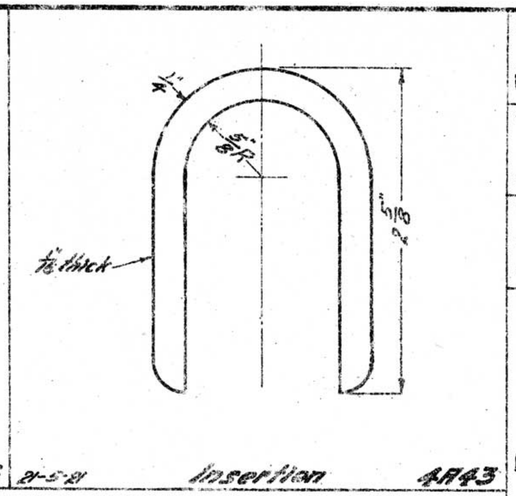

21-5-21 Insertion 4A43

Stores
Section _____
Item No _____

Weathercap complete 5A43

Part No.	Name	Material	Qnty
1A43	Weathercap	C.I.	1
1F198	U. Bolt with Nuts	W.I.	1
4A43	Insertion		1
2F833	Screw O.B.R. 3/4" long	Steel	1

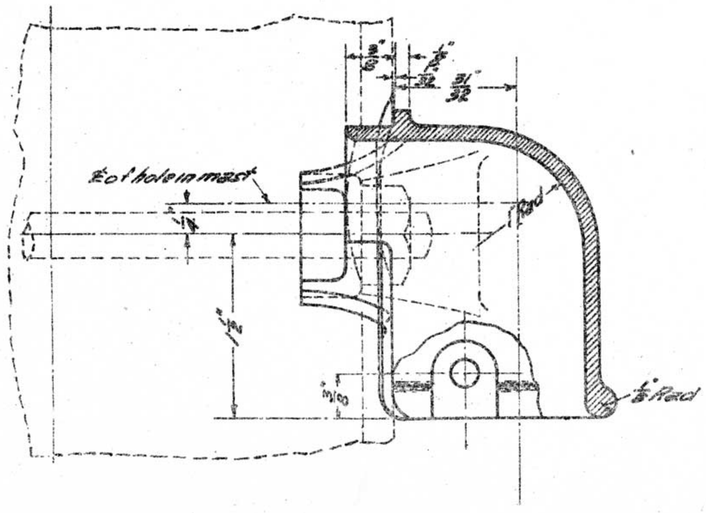

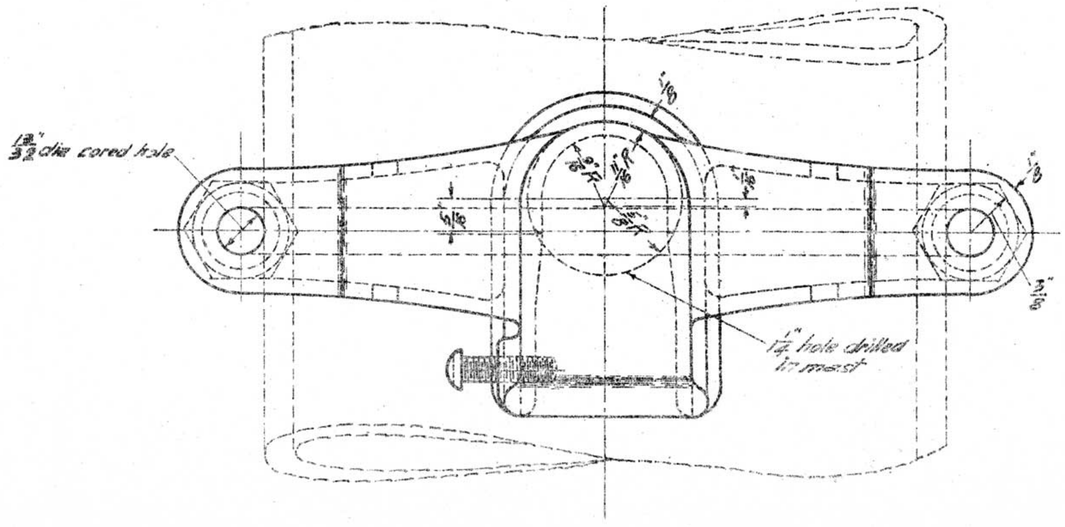

21-5-21 Weathercap 1A43

Engineer of Signals | Drawn by F.J.W. | Traced by F.J.W.

VICTORIAN RAILWAYS
WEATHERCAP FOR 3/4" FLEXIBLE CONNECTION TO 5 1/2" MAST

21-5-21

Redrawn including alteration No. 9.2 revision No. 1. Original under same title dated 16-3-17

22-5-21

L.233/26

A43

A43

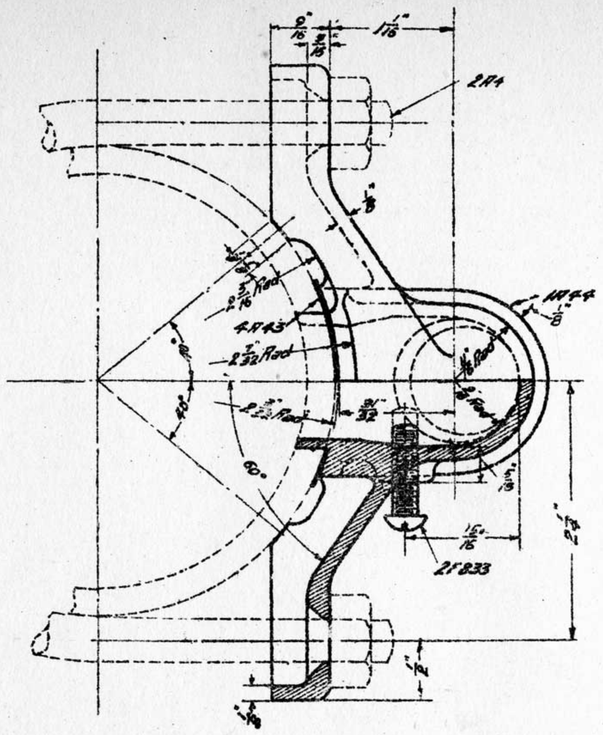

Weathercap complete 5A44

Part No.	Name	Material	Qnty
1A44	Weathercap	C.I.	1
2A46	U-Bolt with Nuts (See F199)	W.I.	1
4A43	Insertion		1
2F833	Screw O.B.R. 3/4" long	Steel	1

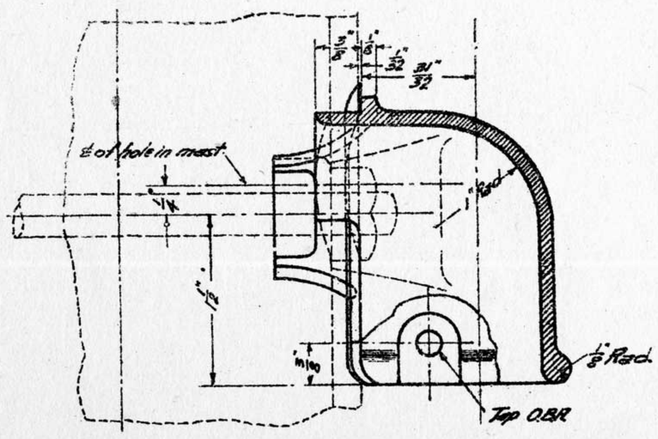

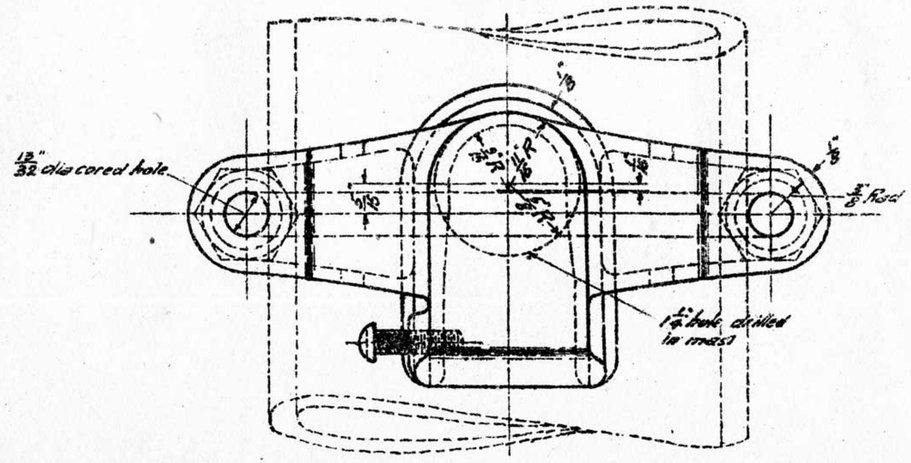

Weathercap

25-5-12

VICTORIAN RAILWAYS
WEATHERCAP
FOR
3/4" FLEXIBLE CONNECTION TO 4 1/8" MAST

Engineer of Signals
Drawn by F.J.W.
Traced by F.J.W.

A44

25-5-21

Redrawn including alteration No. 9 & revision No. 1
Original under same title dated 15-3-17
25-5-21

A44

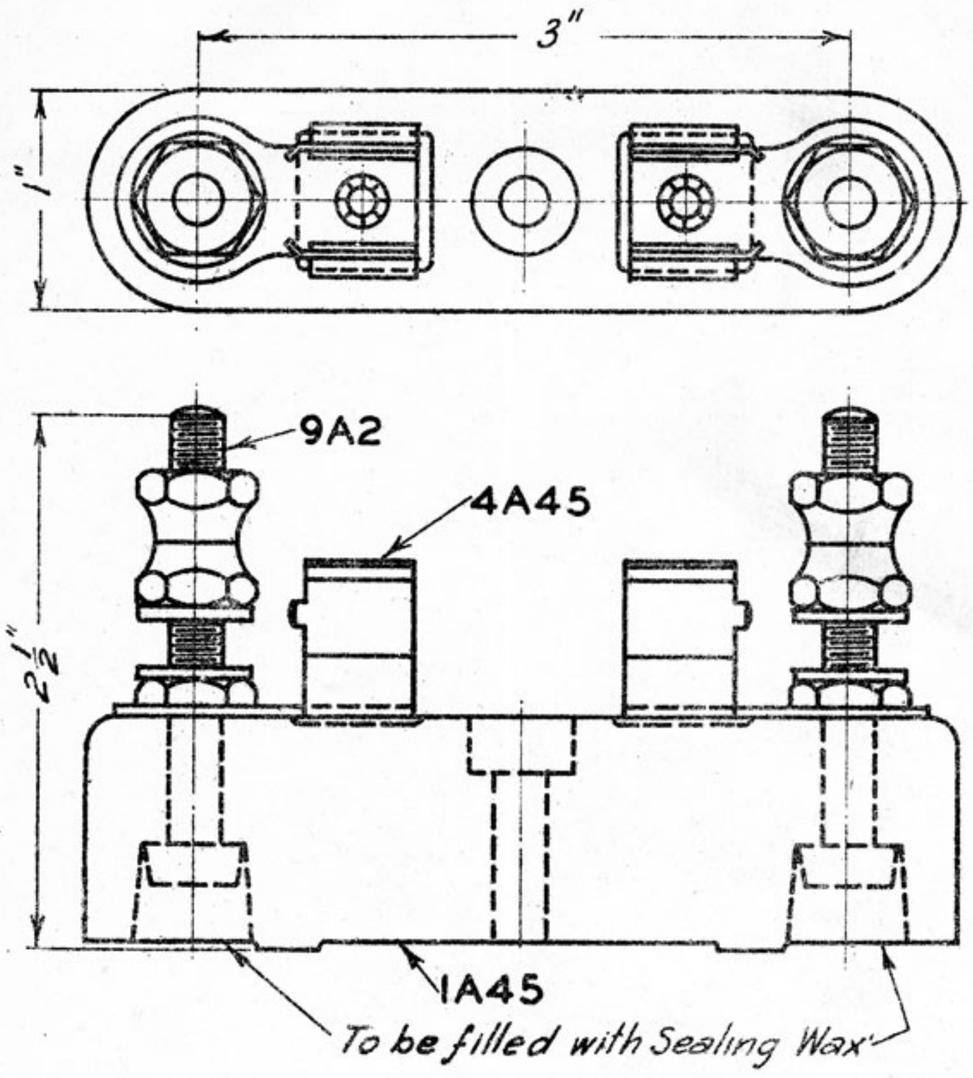

FUSE BLOCK COMPLETE–9A45

Part	Name	Material	Quantity
1A45	Base	Porcelain	1
4A45	Clip (Complete)	—	2
9A2	Binding Post	Brass	2

Previously Part A45.

27-4-28 FUSE BLOCK 9A45

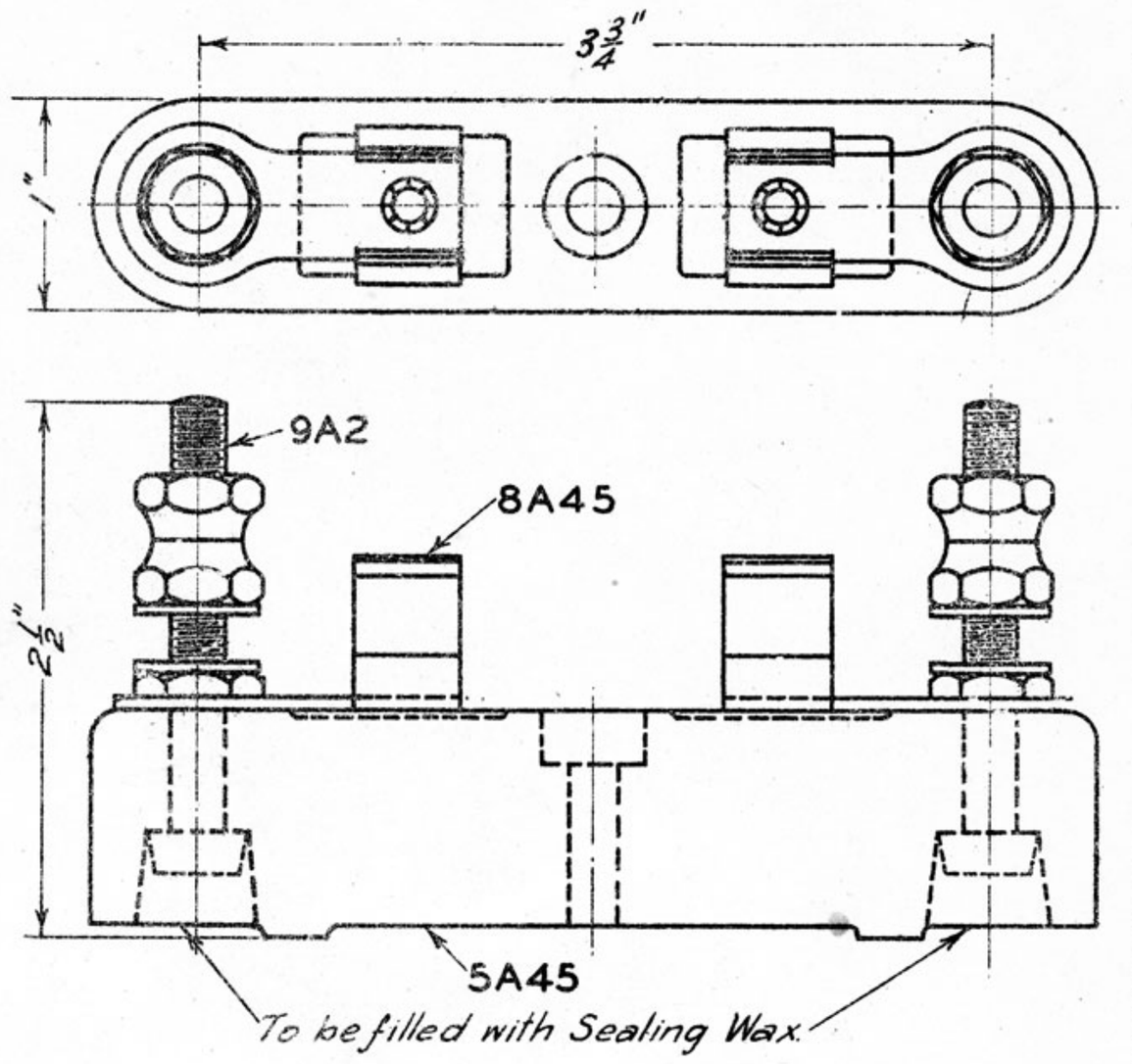

LIGHTNING ARRESTER BLOCK COMPLETE – 10A45

Part	Name	Material	Quantity
5A45	Base	Porcelain	1
8A45	Clip (Complete)	—	2
9A2	Binding Post	Brass	2

27-4-28 LIGHTNING ARRESTER BLOCK 10A45

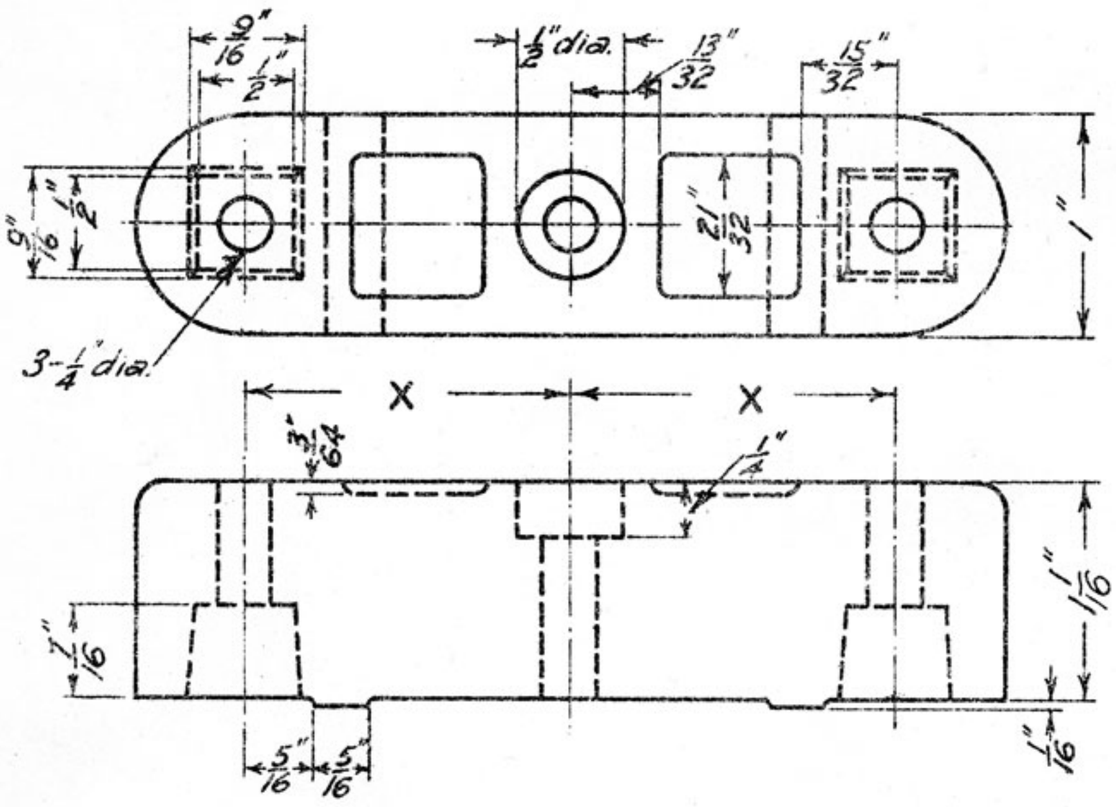

To be glazed according to Specifications.

27-4-28 Porcelain BASE "X" = 1 7/8" – 5A45; "X" = 1½" – 1A45

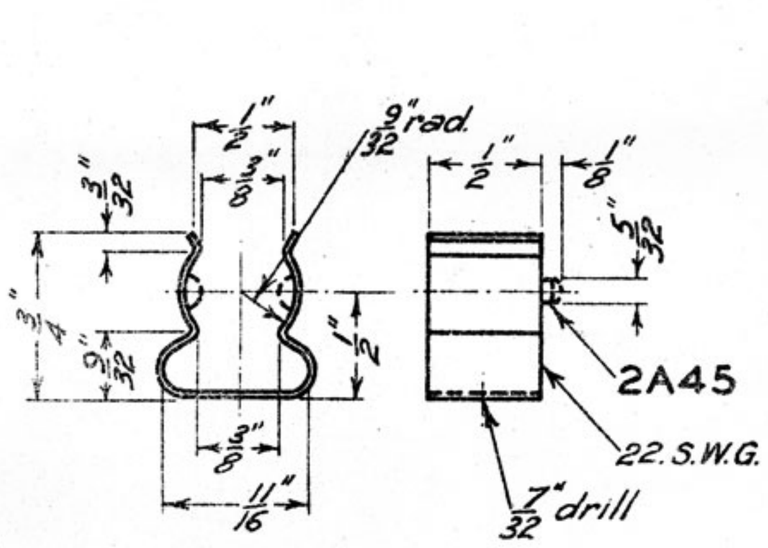

27-4-28 Phos. Br. CLIP Without Lugs 6A45; With " 2A45

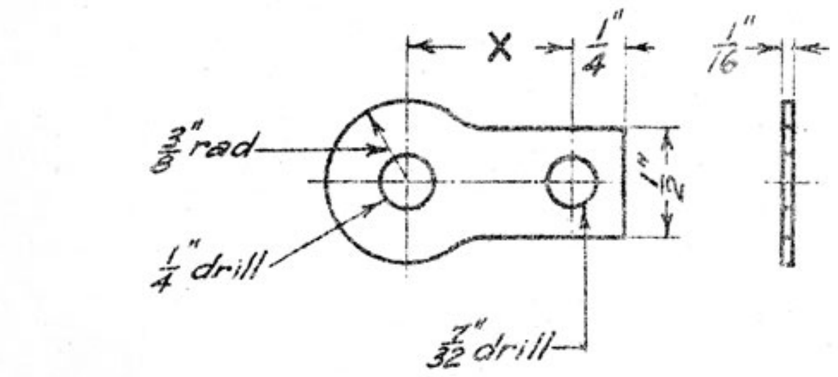

Brass CONNECTOR "X" = 31/32" – 7A45; "X" = 25/32" – 3A45

27-4-28

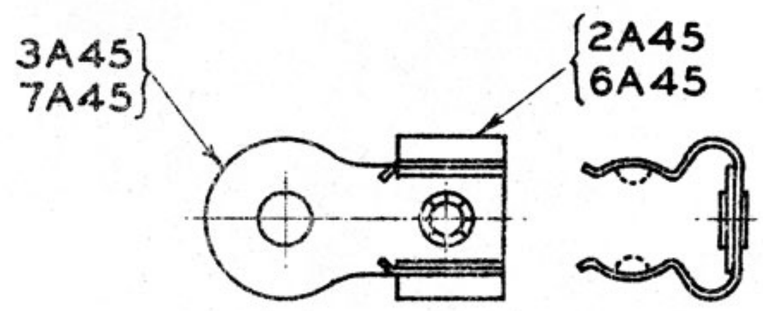

Clip & Connector riveted with eyelet & soldered

8A45 – 7A45 with 6A45 fixed in position
4A45 – 3A45 " 2A45 " " "

27-4-28 CLIP (Complete) 8A45 4A45

A45

Redrawn. Part Nos 5A45 to 10A45 added. Original under title "Fuse Blocks" dated 26-5-15

VICTORIAN RAILWAYS

PORCELAIN BASES FOR FUSES & LIGHTNING ARRESTERS

27-4-28

Chief Eng. Sigs. & Tels.	Drawn by L.J.P.	Traced by L.J.P.

A 45

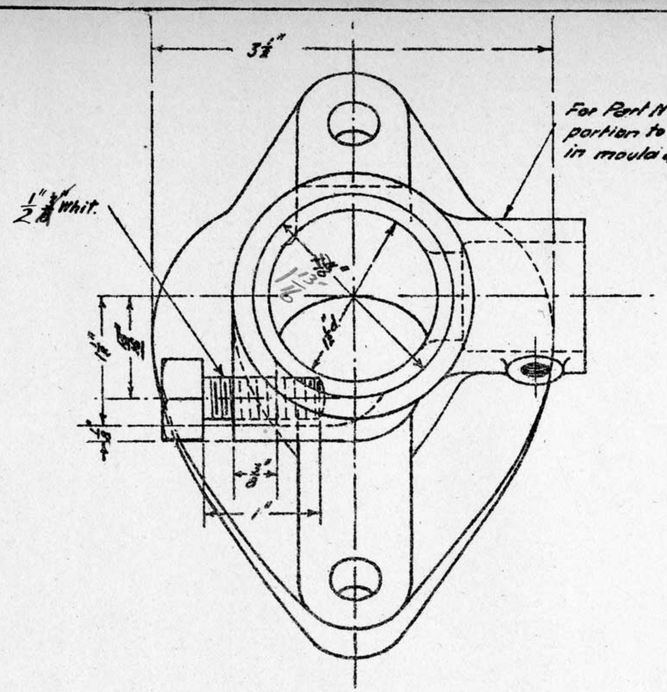

END VIEW - U-BOLT REMOVED

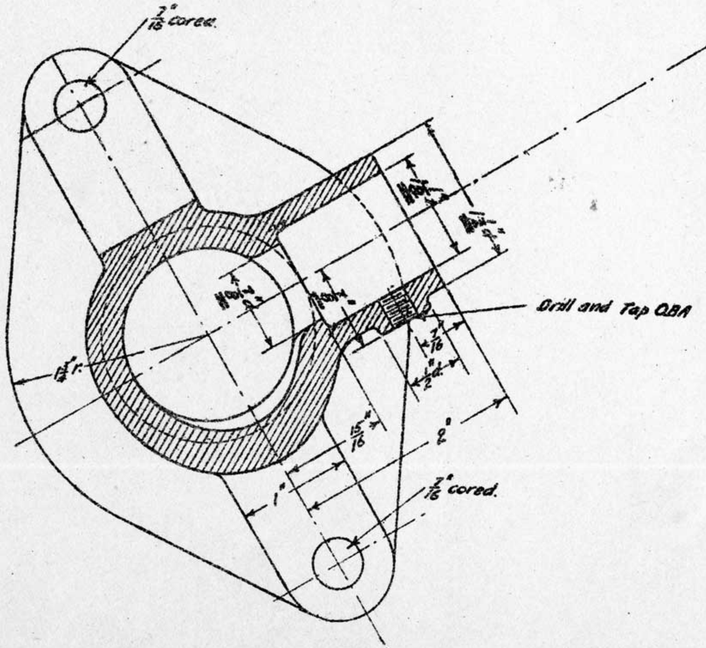

SECTION ON A-B - U-BOLT REMOVED

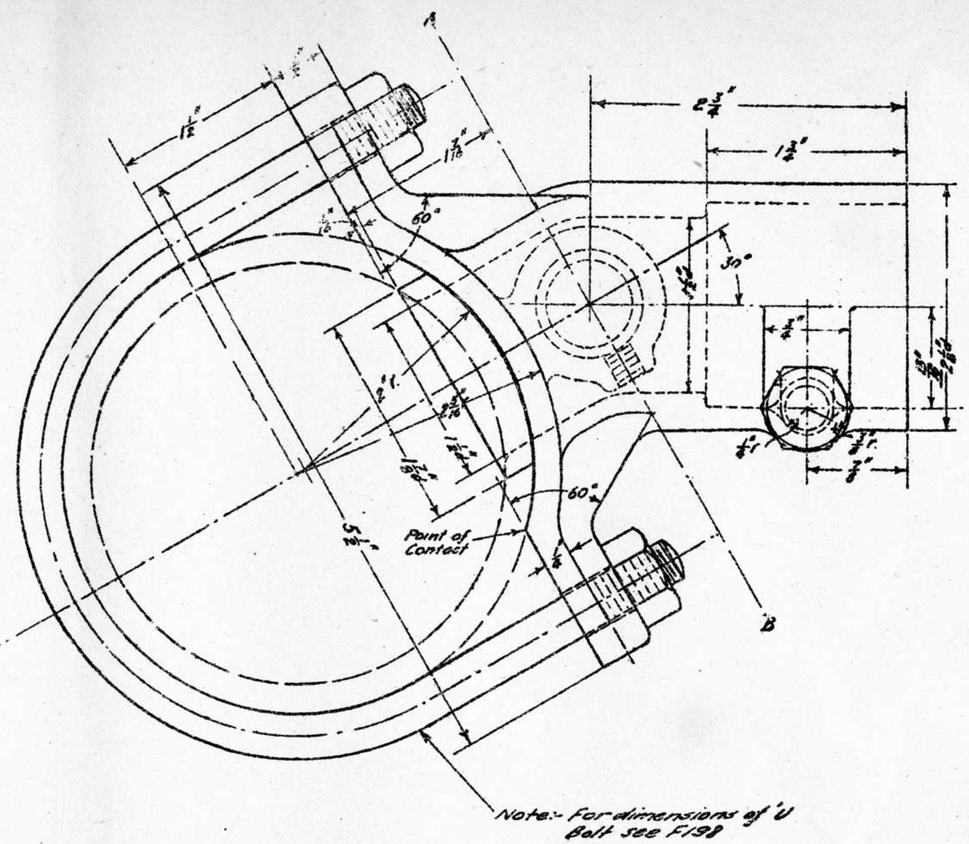

Note:- For dimensions of 'U' Bolt see F198

PLAN

Coupling complete for 1½" & ¾" connection 3846
" " 1½" connection only 4846

Part No.	Name	Mat	3846	4846
1A46	Coupling (as shown)	C.I.	1	—
2 "	U-Bolt with nuts	W.I.	1	1
Stock	~~Jamb Bolt 1" long~~ 1½" Whit. Set Screw with ⅜" Whit. Hd. 1" long	M.S	1	1
2F833	O.B.A. Rd. Headed Screw ¾" long	M.S.	1	—
5846	Coupling (See note)	C.I.	—	1

2·4·28 Alteration No 194 K.G.H.C.	Alteration No 9 26·5·21	3 1·9·20 Part No 5846 added. F.W.	2 7·9·17 ¾" Connection adopted to take ¾" Flex. direct. O.B.A. Screw added to List. Slot for U Bolt removed. W.V.N.	1 17·7·17 Re-dimensioned, to suit 2" instead of 1⅞" hole in pipe W.V.N.

VICTORIAN RAILWAYS
COUPLING FOR 1½" & ¾" FLEXIBLE CONNECTION TO ½" PIPE

Drawn by W.V.N.
Traced by W.V.N.
Checked by

Engineer of Signals

A46

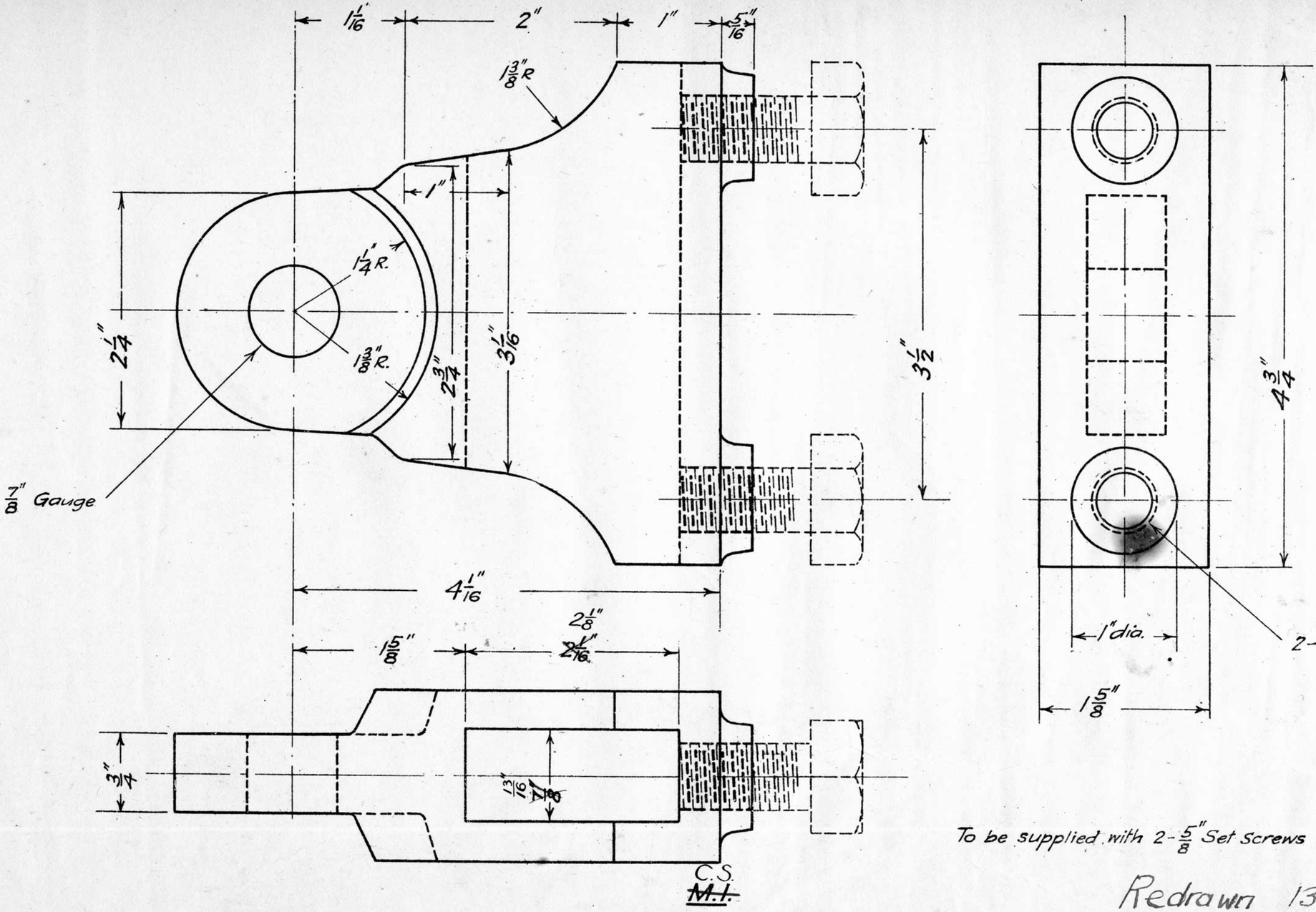

Adjusting Clip

To be supplied with 2- 5/8" Set Screws 1 1/4" long

Redrawn 13-10-44

1A52

VICTORIAN RAILWAYS

ADJUSTING CLIP

Chief Engr of Sigs & Tels.	Drawn by	Traced by
	S.C.O.	S.C.O.

10-8-23

A 52

4075.23

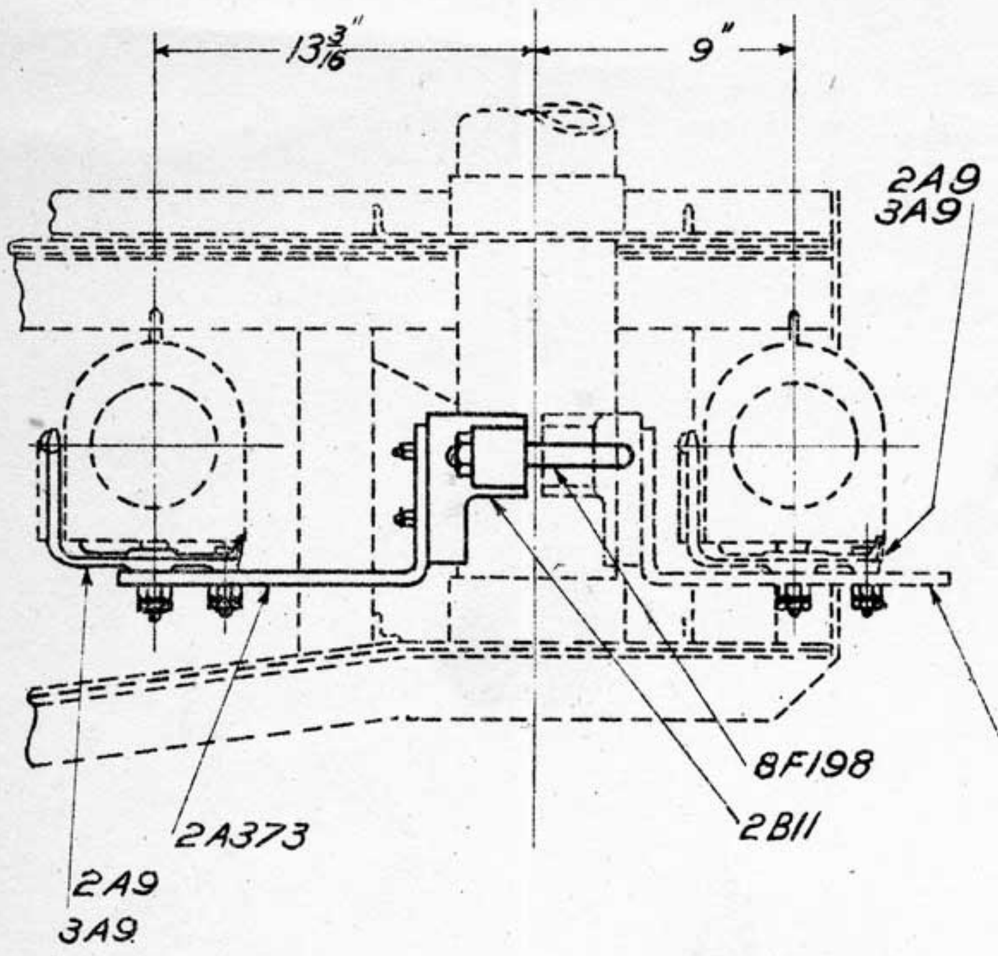

No	Name	Material	L.H.		R.H.	
			Elect. 1A55	Oil 2A55	Elect. 3A55	Oil 4A55
1A373	Support.	C. S.	—	—	1	1
2A373	"	"	1	1	—	—
2A9	Upright	M. I.	1	—	1	—
3A9	"	"	—	1	—	1
2B11	Clamp	~~C.I.~~ C.S.	1	1	1	1
8F198	U. Bolt	M.S.	1	1	1	1
Stock.	½" Sq. Hd. Bolt 2" long & Lock Nut	—	2	2	2	2
"	½" Sq. Hd. Bolt 1½" long & Washer	—	2	2	2	2

ADJUSTABLE LAMP BRACKET
For Bracket Mast.

Elect. Oil
R.H. 3A55 4A55
L.H. 1A55 2A55

22-5-24/Alt. 72.

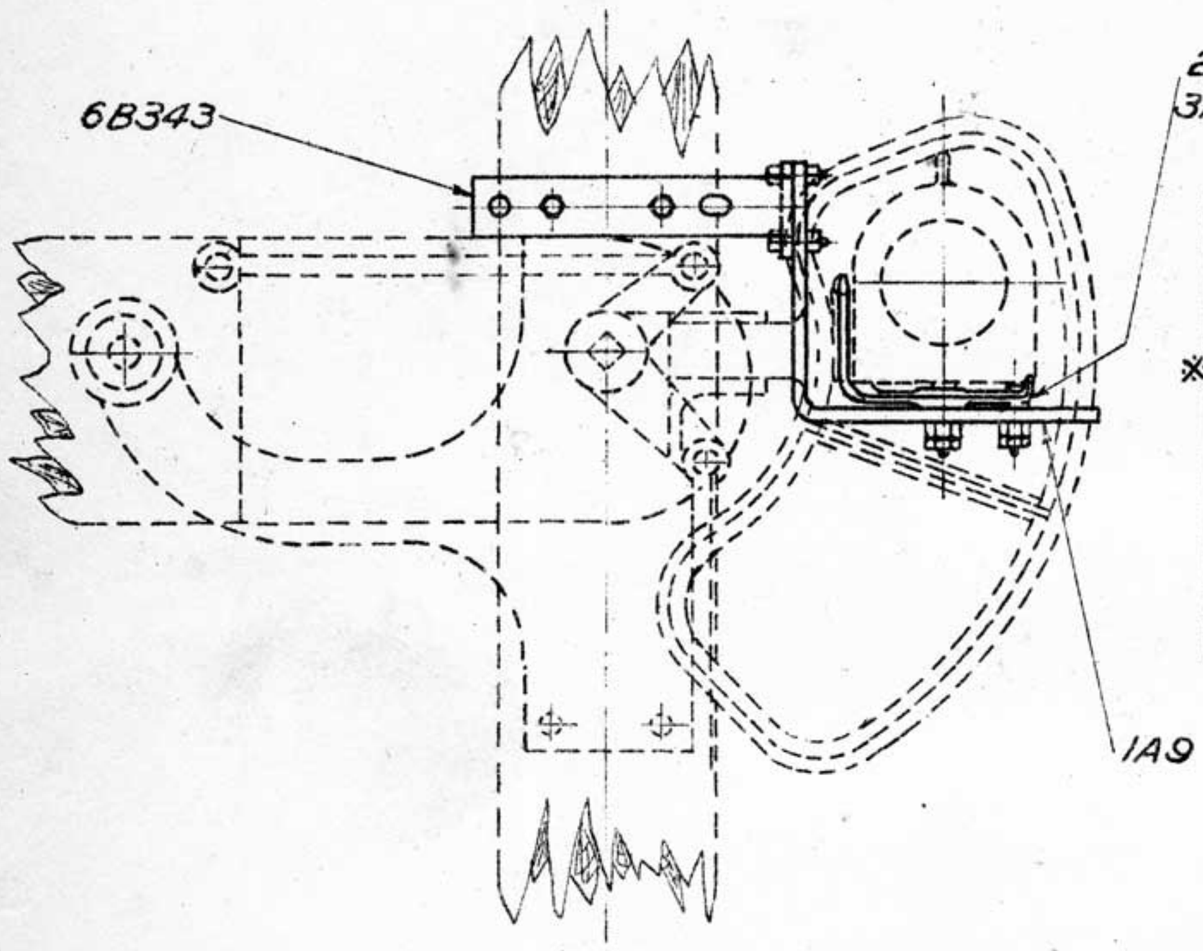

No	Name	Material	Elect. 8A55	Oil 9A55
2A9	Upright	M.I.	1	—
3A9	"	"	—	1
* 6B343	Support.	C.S.	1	1
1A9	" X = 5¾"	"	1	—
1A9	" X = 7¾"	"	—	1
Stock.	½" Sq. Hd. Bolt 2" long & Lock Nut.	—	2	2
"	Fixing Bolt ⅝" dia. Length to be stated. Allow ½" for Support.	—	2	2
"	½" Hex. Bolt 1½" long	—	2	2

* For Arms low down on Lattice Mast, 6B343 to be replaced by 7B343, with centers of fixing holes 8½", unless otherwise stated.
When ordering state if 7B343 is required.

ADJUSTABLE LAMP BRACKET
For Mechanical Semaphore

Elect. Oil
8A55 9A55

22-5-24/Alt. 72.

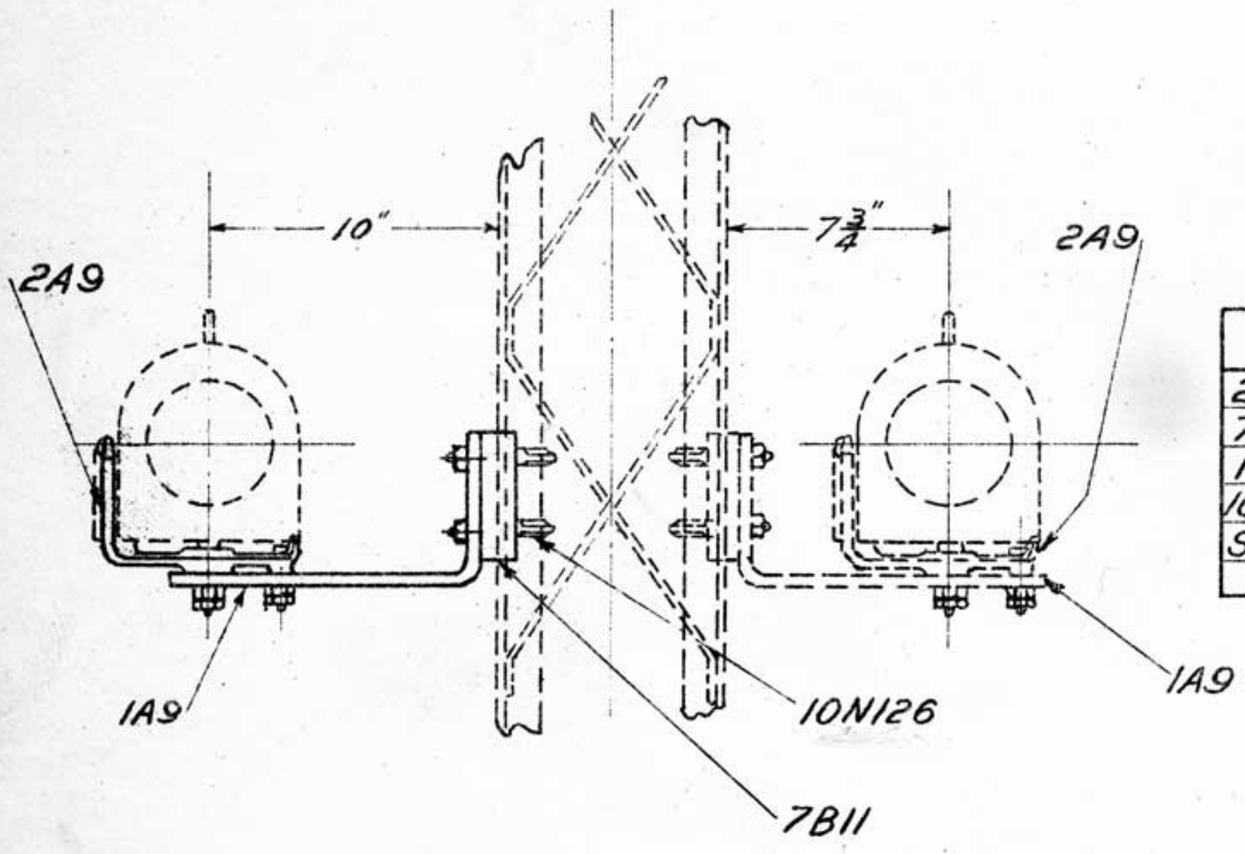

No	Name	Material	Q'nty
2A9	Upright	M.I.	1
7B11	Clamp	~~M.I.~~ C.I.	1
1A9	Support X = 1½"	C.S.	1
10N126	Hook Bolt.	"	2
Stock.	½" Sq. Hd. Bolt 2" long & Lock Nut	—	2
	½" " " " 1½" " & Washer.	—	2

ADJUSTABLE LAMP BRACKET
For Lattice Mast

Elect. 14A55

22-5-24/Alt. 72.

10 H 292

A55

22-5-24
Redrawn including Alteration No 72. Parts 6A55, 7A55, 10A55, 11A55 12A55, 13A55 & 15A55 deleted. Original under same title dated 15-8-17.

VICTORIAN RAILWAYS
ADJUSTABLE LAMP BRACKET ASSEMBLIES
22-5-24.

Chief Engr of Sigs & Tels.	Drawn by	Traced by
	L.J.P.	L.J.P.

A55

COUPLING COMPLETE FOR 1½" & ¾" CONNECTION ___ 2A62.
" " 1½" CONNECTION ONLY ___ 1A62

Nº	NAME	MATERIAL	QUANTITY 1A62	QUANTITY 2A62
3A62	Coupling (see note)	C.I.	1	
4A62	" (as shown)	C.I.	-	1
5A62	⅜" U Bolt	W.I.	1	1
Stock	½" Whit. ⅜" Set Screw with ⅜" Whit. head 1" long	-	1	1
2F833	OBA Rd. Headed Screw ⅜" long	-	-	1

⅜" U BOLT. ___ 5A62
SCALE HALF SIZE

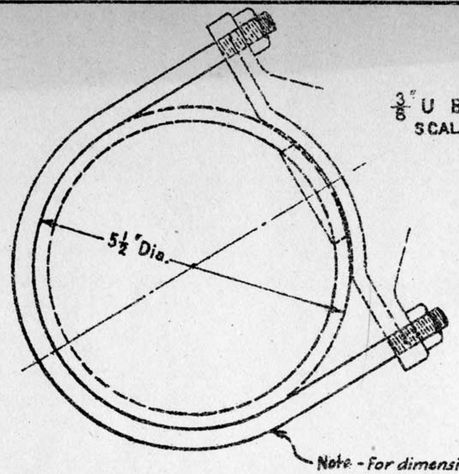

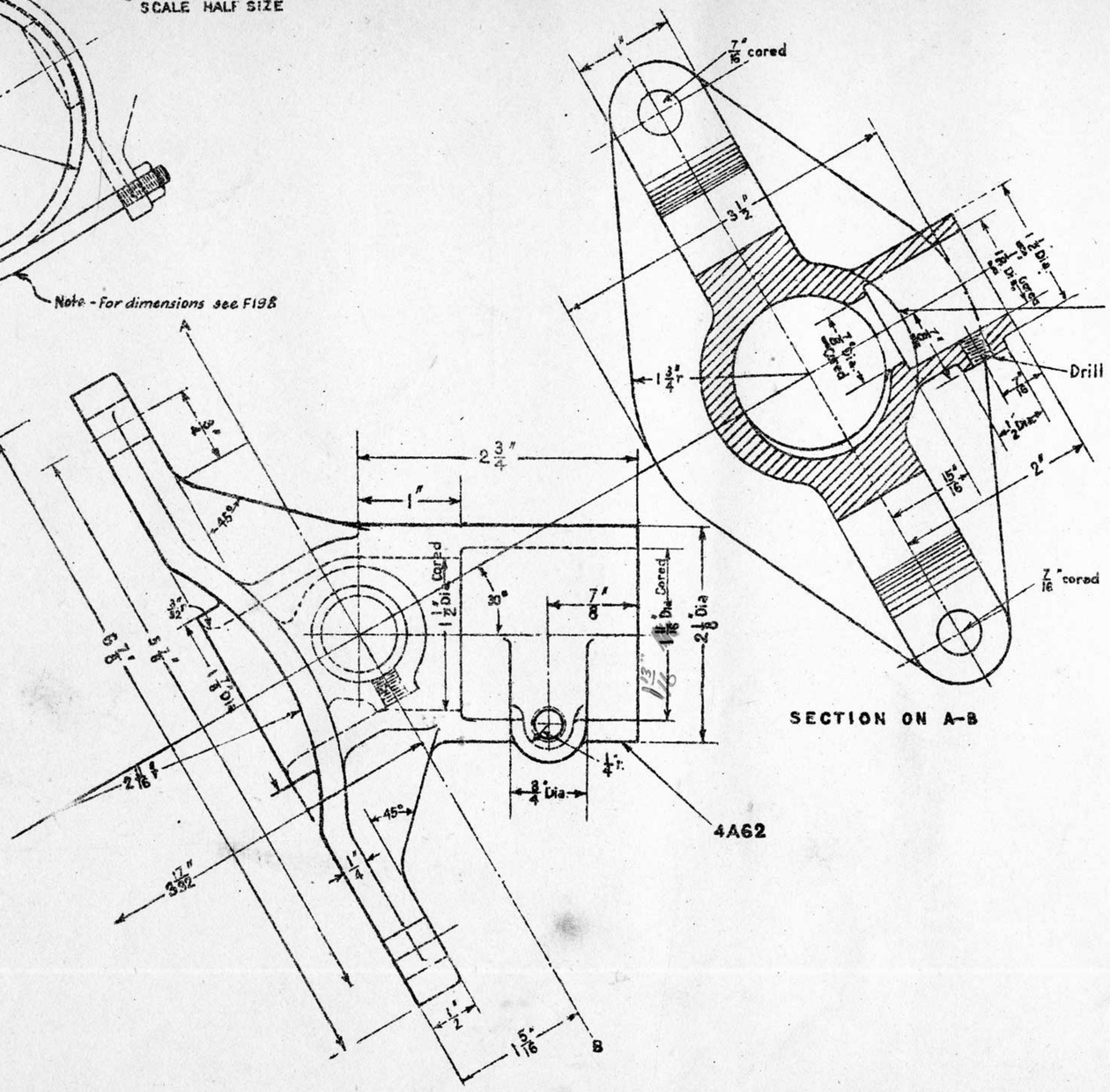

FOR PART Nº 3A62 THIS PORTION TO BE STOPPED OFF IN MOULD AND HOLE CLOSED TO CHAIN LINE

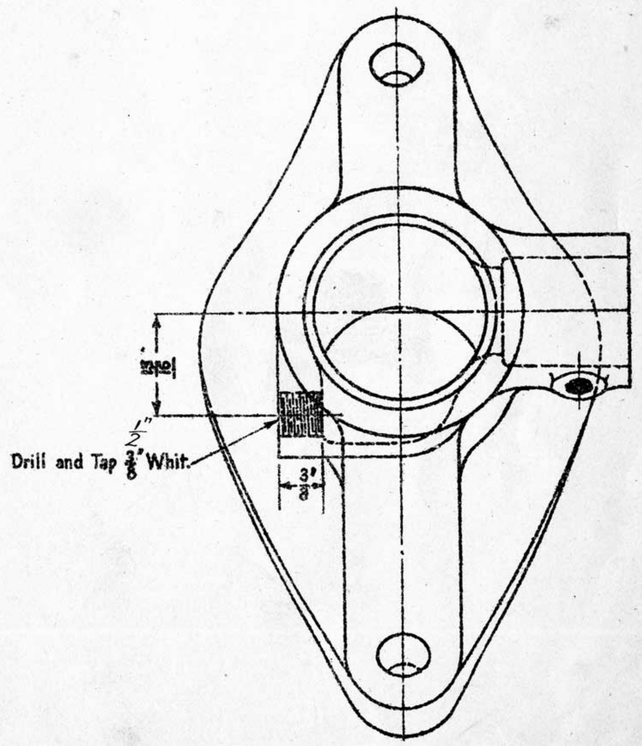

2-4-28 Alteration Nº 194 KCHC.	Alteration Nº 9 26-5-31	

VICTORIAN RAILWAYS
COUPLING FOR 1½" & ¾" FLEXIBLE CONNECTION TO 5" PIPE

Drawn by J.T.M.
Traced by G.R.Y.

ENGINEER OF SIGNALS

A62

MOUNTING COMPLETE IA63

Nº	NAME	MATERIAL	QUANTITY
1B124	Mounting	C.I.	1
2B124	Weathercap	"	1
3B124	U Bolt	M.S.	1
Stock	$\frac{5}{16}$" Ch. Hd. Setscrew $\frac{3}{4}$" long		2

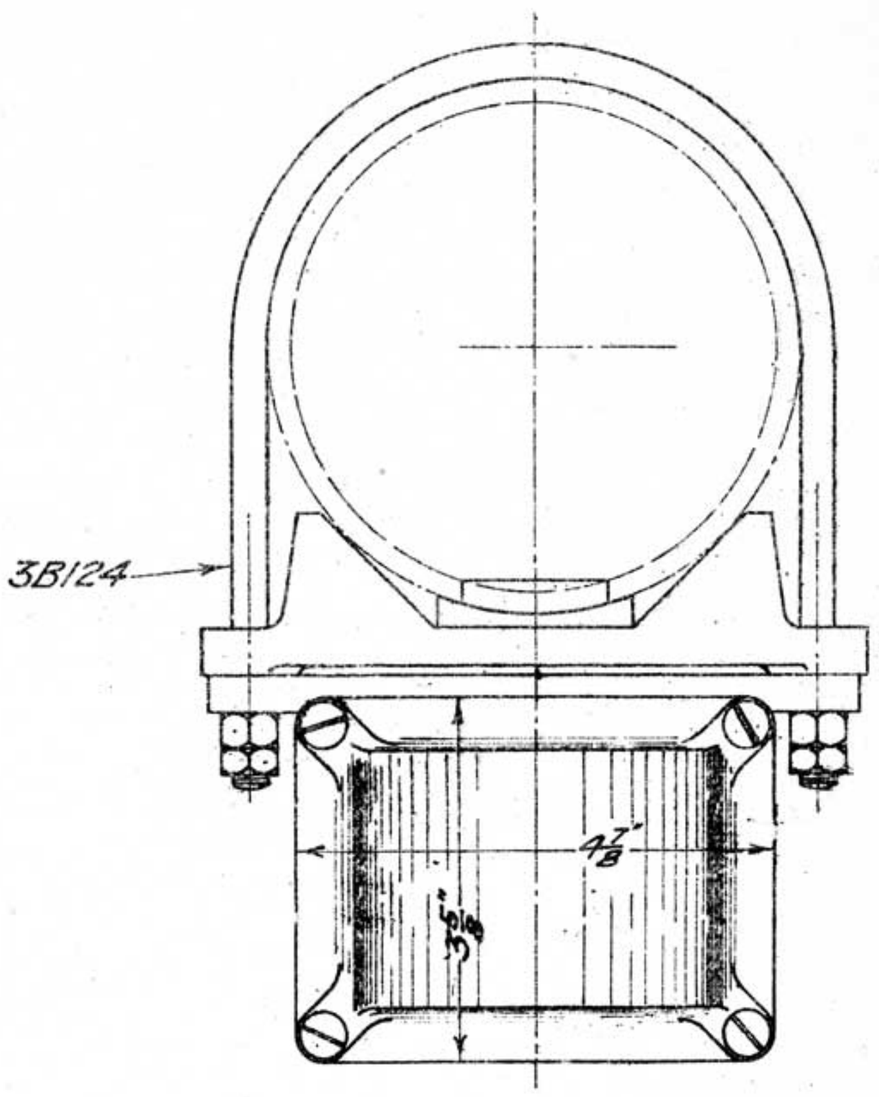

Stores
Section _____
Item Nº _____

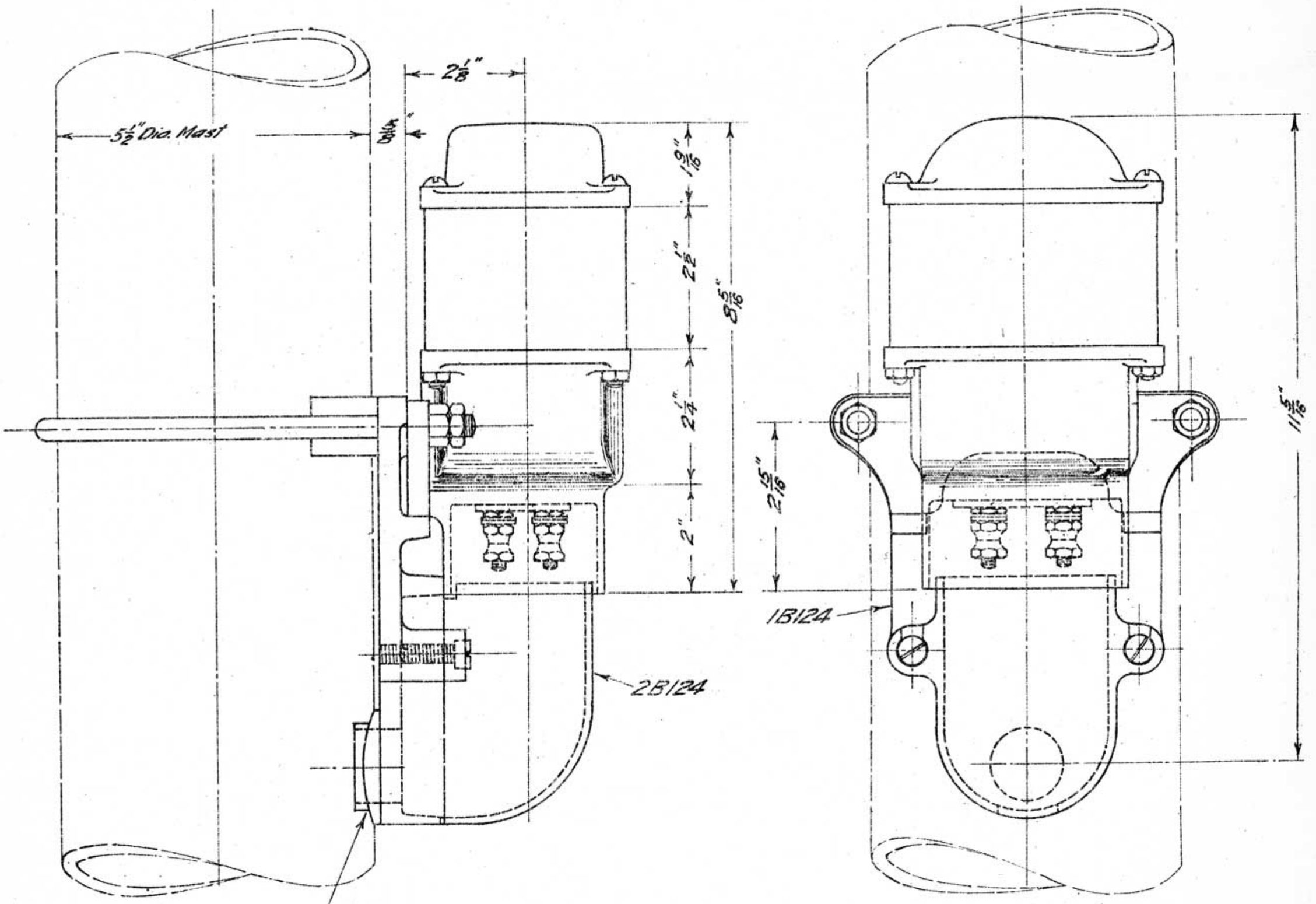

VICTORIAN RAILWAYS
LIGHTING TRANSFORMER MOUNTING
ASSEMBLY
14-9-17

Drawn by S.C.O.
Traced by S.C.O.

Engineer of Signals

A63

A63

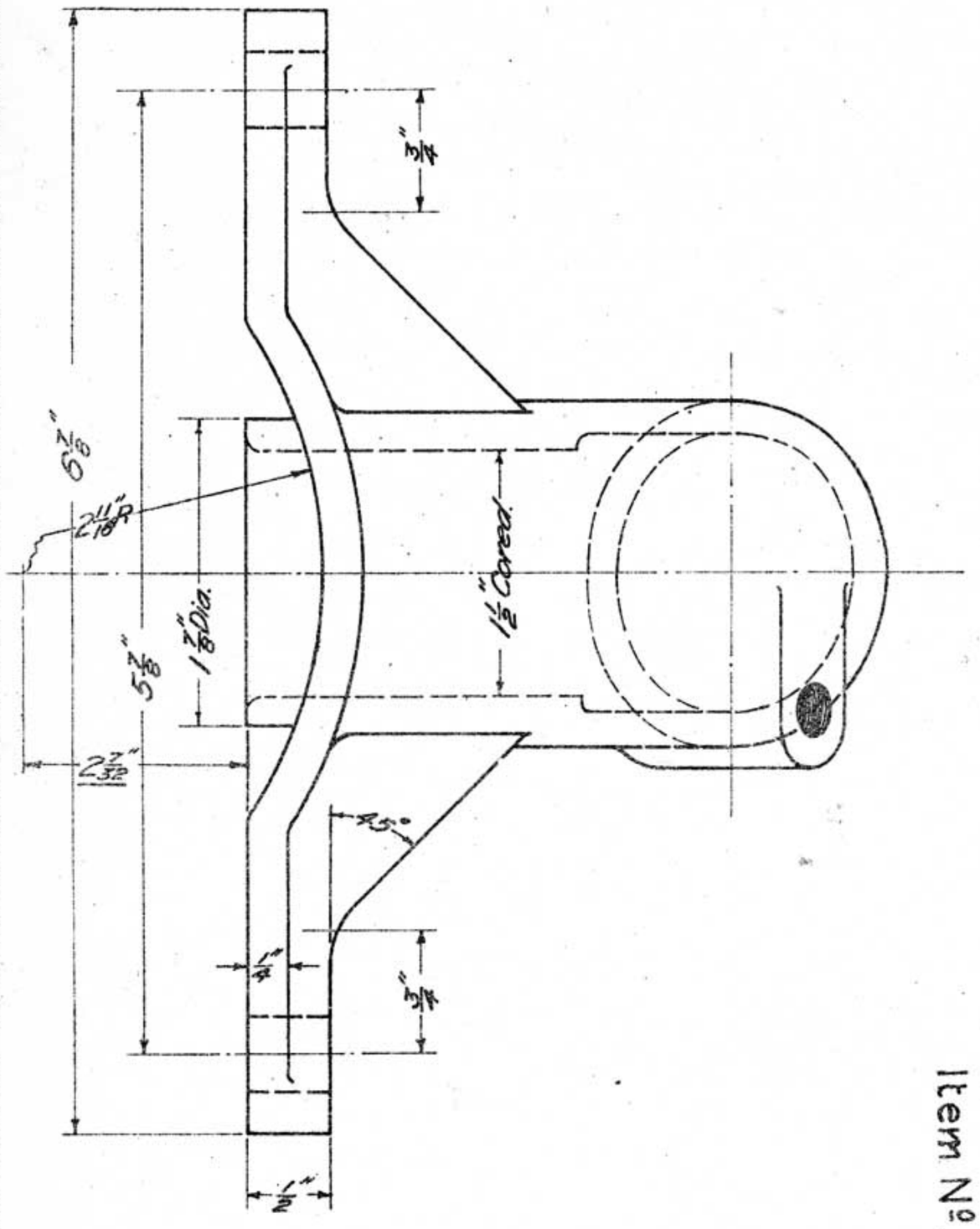

1A65 1½" Coupling complete

NO	NAME	MATERIAL	QUANTITY
2A65	Coupling.	C.I.	1
5A62	3/16" U Bolt.	W.I.	1
Stock	3/8" Set Screw. 1" long.	-	1

3A65- 1" Coupling complete

4A65 Coupling C.I. 1
5A62 } as above.
Stock }

See New Blue Print
A65. 28/5/30.

Stores
Section ____
Item No ____

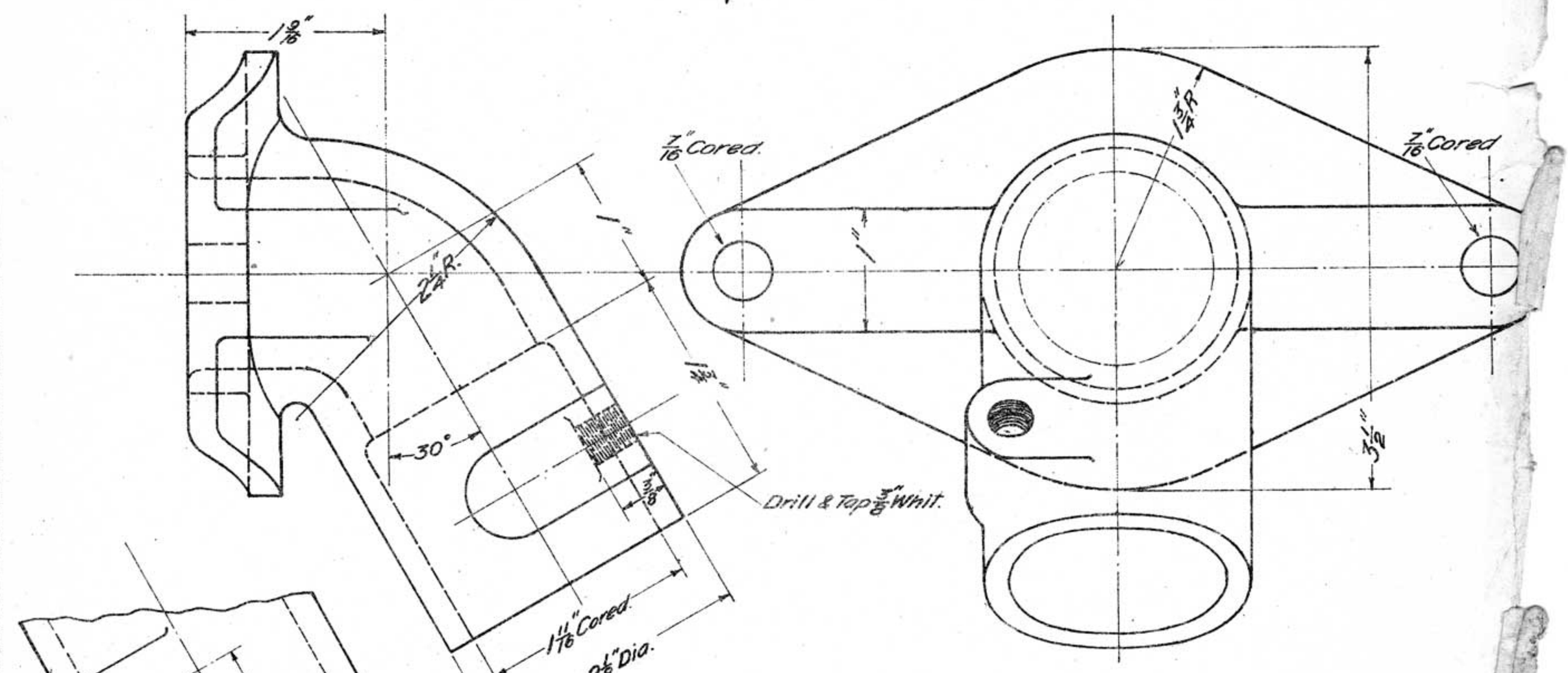

PART PLAN.
Shewing Position of Set Screw.

See Blueprint Dated
28-5-30.

1½ Coupling Complete 1A65

Redrawn Part added

Redrawn with Parts added 28-5-30

VICTORIAN RAILWAYS.
COUPLING FOR
FLEXIBLE CONNECTION.
[1½" Dia]
TO 5" PIPE.
11. 10. 17.
Engineer of Signals.

A65

A6

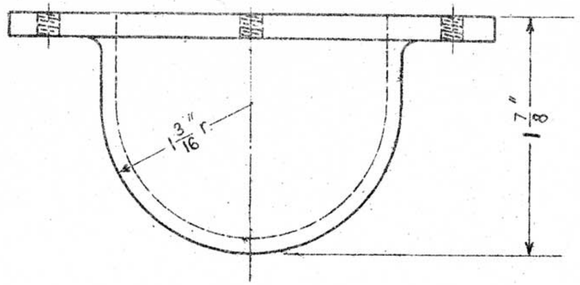

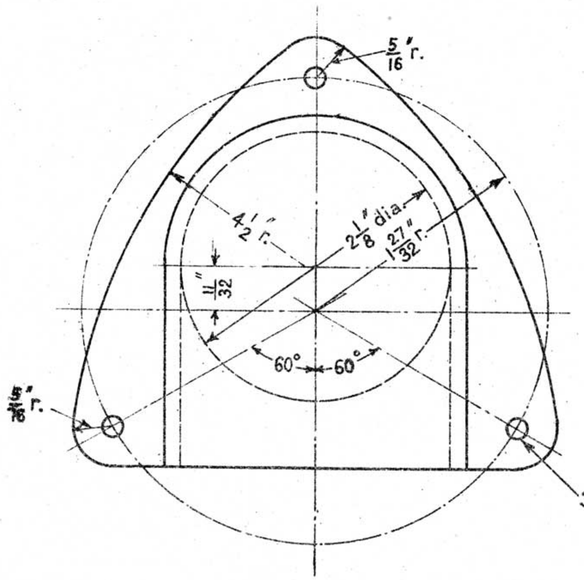

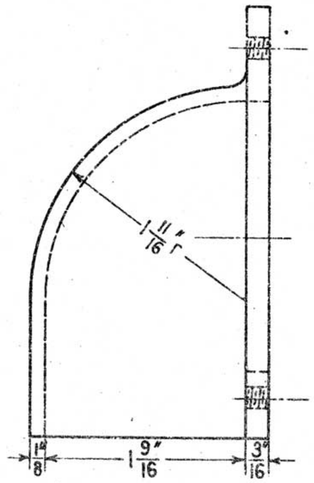

16:10:17. COVER 2A68

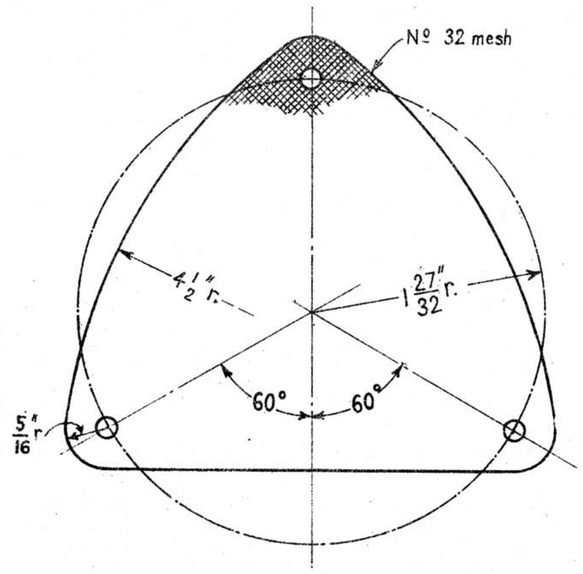

16:10:17. SCREEN 3A68

1A68
VENTILATOR COMPLETE

Nº	NAME	MATERIAL	QUANTITY
2A68	Cover	C.I.	1
3A68	Screen	Brass Gauze	1
Stock	2 BA C'sk. Screw 7/16" long	M.S.	3

Stores Section _____
Item Nº _____

VICTORIAN RAILWAYS
VENTILATOR
16:10:17.

Drawn by W.J.V.
Traced by G.R.Y.

Engineer of Signals

A68

L.213/25

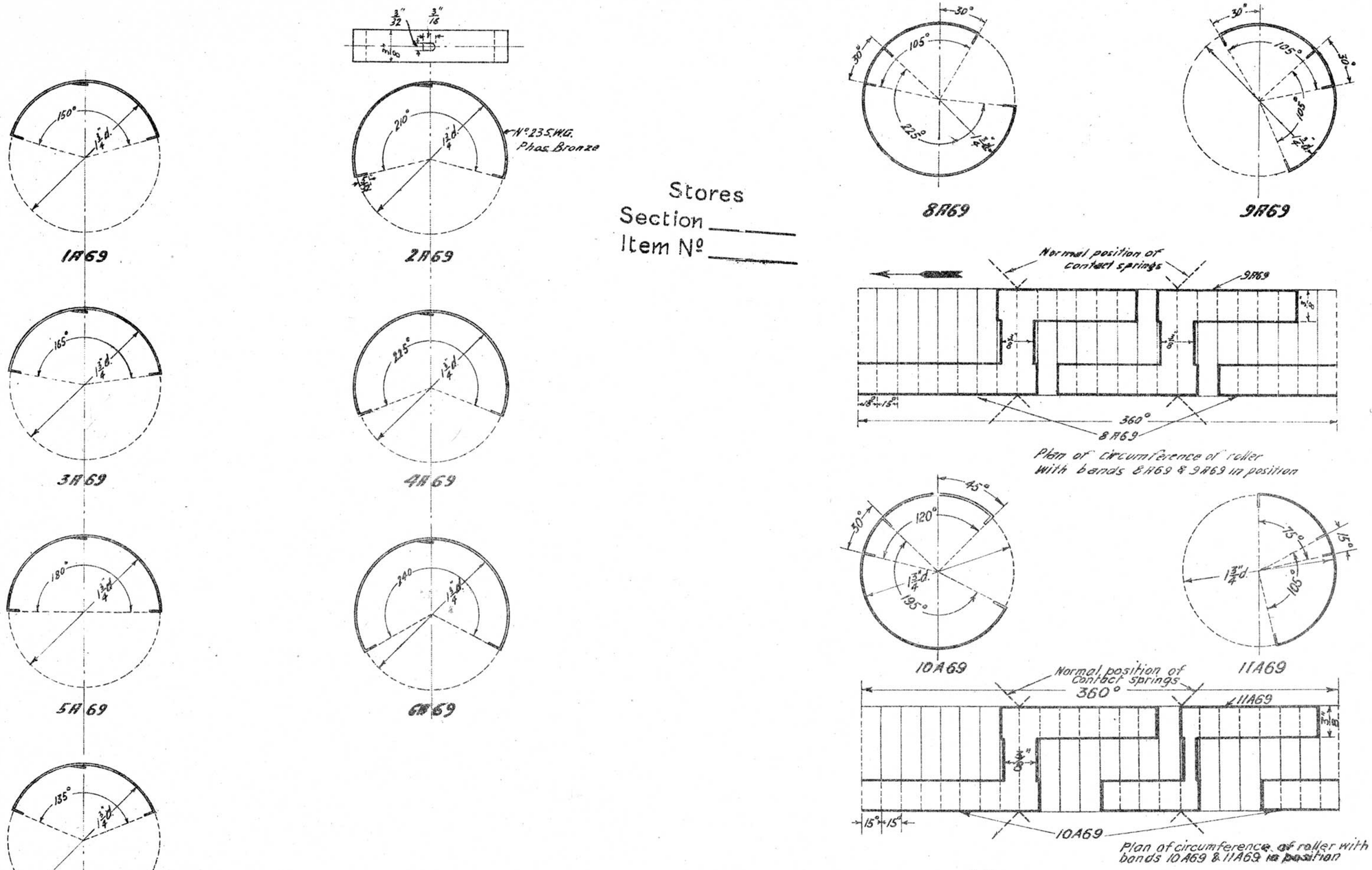

Stores
Section _____
Item No _____

Note:-
Radius of bands shown as in position on roller. Bands to be shaped to $1\frac{5}{8}$" radius so that they will spring tight into position on roller.

1	2·11·22	Parts 10A69 & 11A69 Added
		V.G.C.

Reference
F166 - Key to position of bands on roller.

VICTORIAN RAILWAYS
CONTACT BANDS

3-11-17

Engineer of Signals

Drawn by AHS
Traced by F.J.W.
AHS

A69

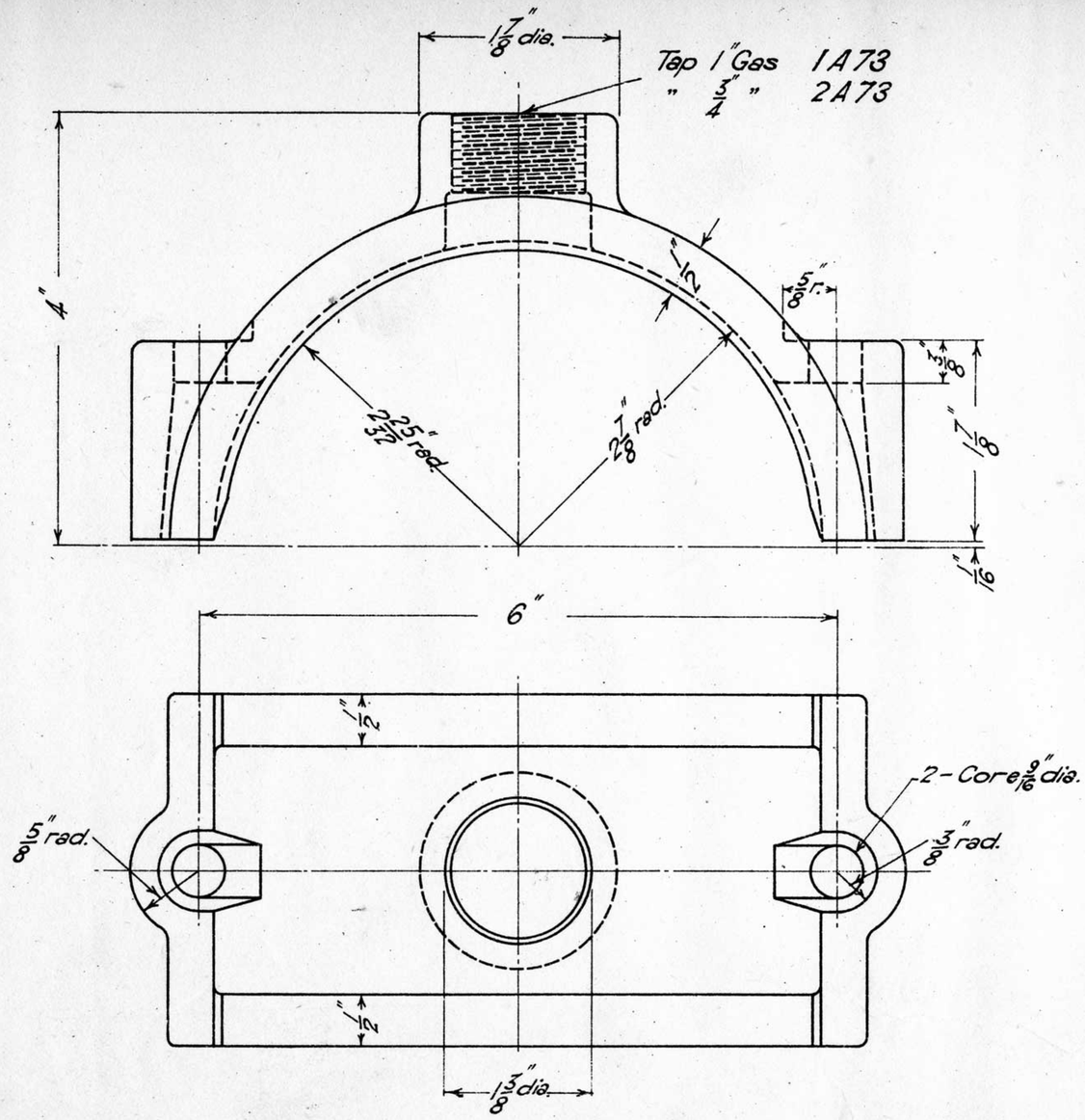

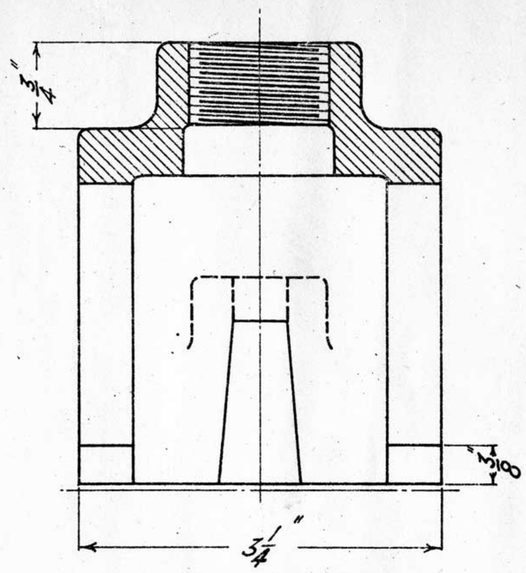

To be supplied with 1-U Bolt 25F198
or 1-1/2" Whit. Bolt 5 1/2" long.

26-5-27

C.I.
CLAMP

See Blueprint Redrawn
16-1-46

For 3/4" Pipe 2A73
" 1" " 1A73

26-5-27 Redrawn incl. Alt. No 174 Original under same title & number dated. 31-8-18 Part 2A73 added.	VICTORIAN RAILWAYS **HANDRAIL CLAMP** 5 1/2" MAST 26-5-27	Chief Engr. Sigs. & Tels.	Drawn from Sample	Traced by K.C.H.C.
		A73		

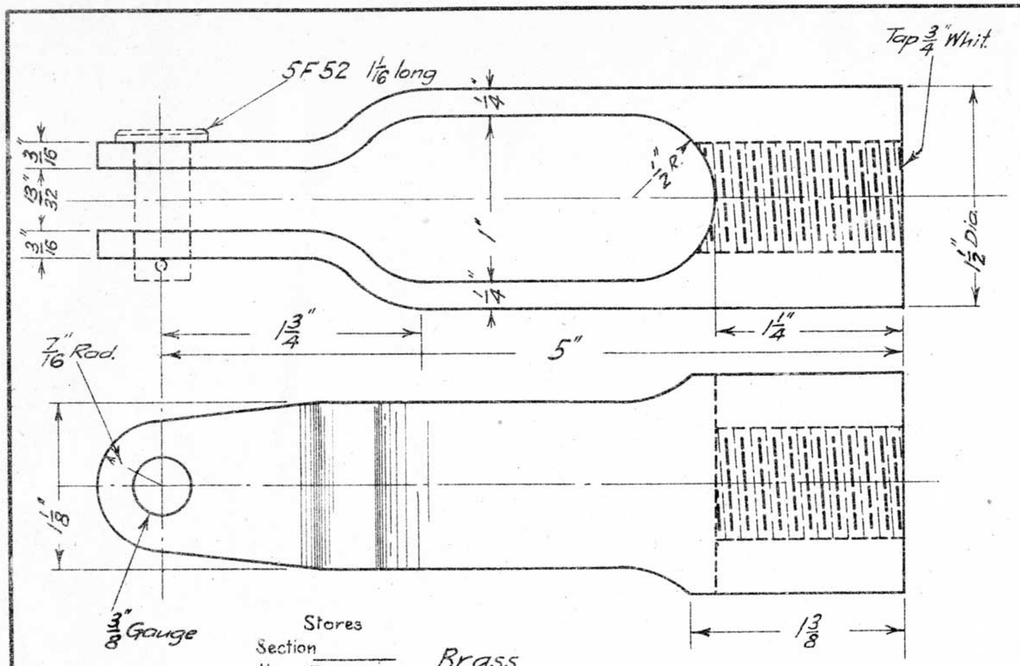

7 - 8 - 23

1A77

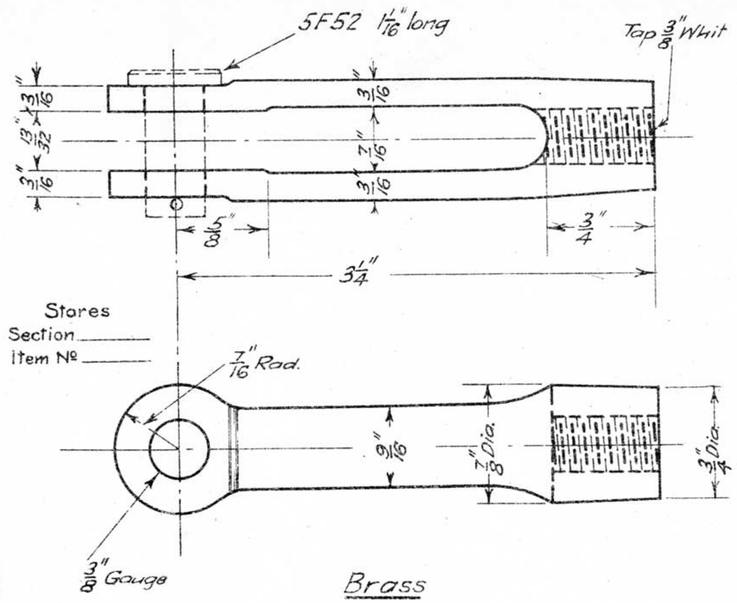

7 - 8 - 23

2A77

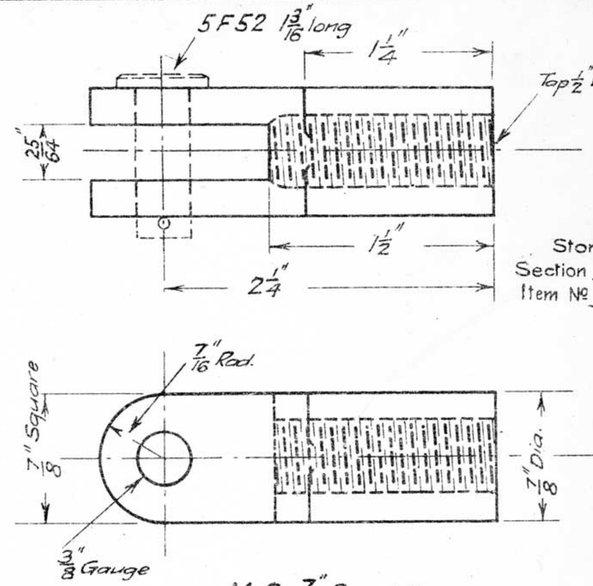

7 - 8 - 23

previously part of 4A10

5A77

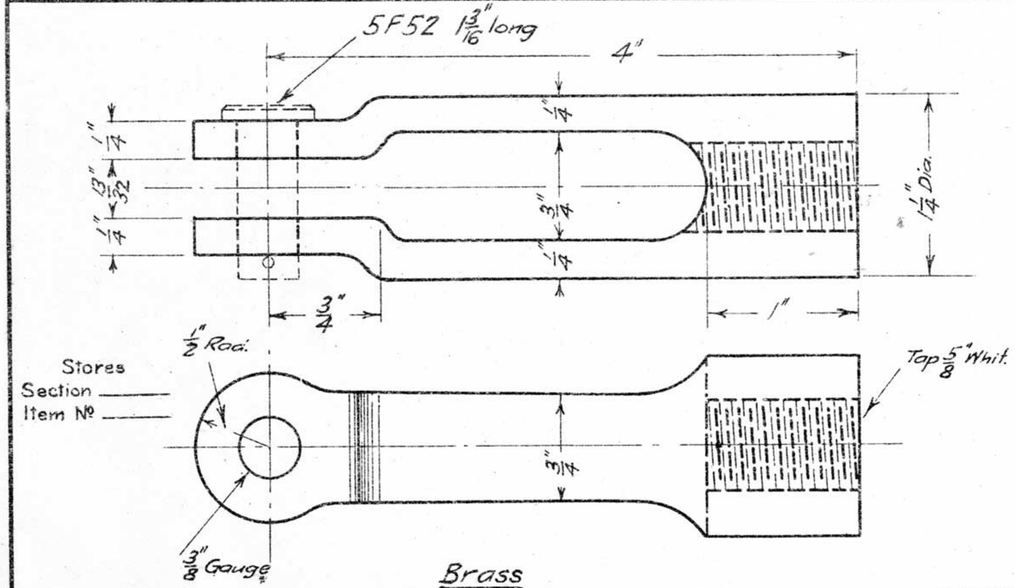

7 - 8 - 23

3A77

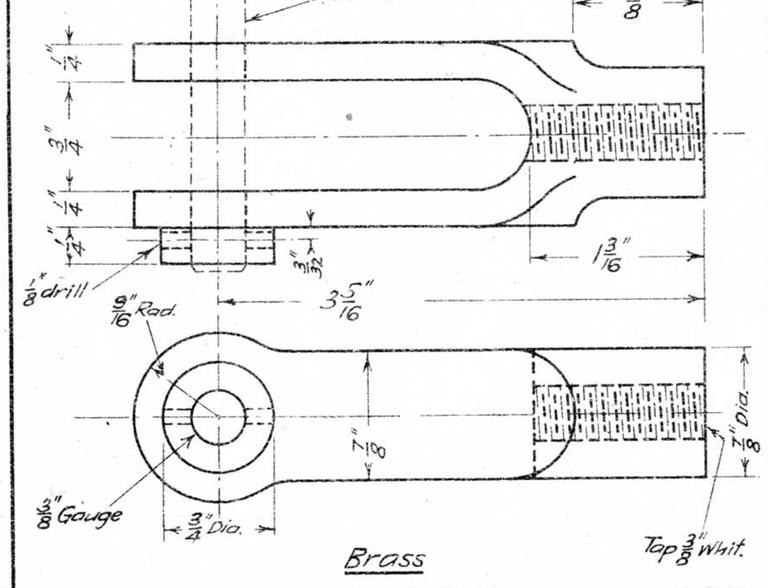

7 - 8 - 23

previously 5A10

4A77

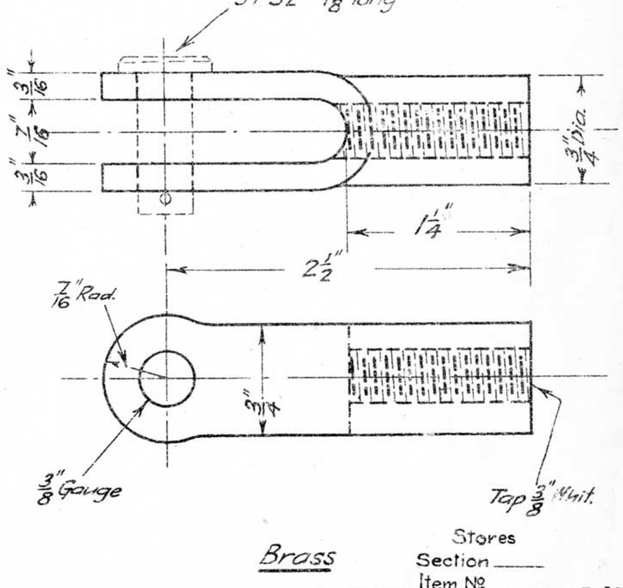

7 - 8 - 23

previously 3A10

6A77

REDRAWN 7-8-23

Original Title :- Adjustable Couplings dated 29-10-18 Parts No 4A77, 5A77, & 6A77 added

VICTORIAN RAILWAYS

ADJUSTABLE JAWS

7-8-23

Chief Engr of Sigs. & Tels	Drawn by	Traced by
	S.C.O.	S.C.O.

A 77

L.258/23

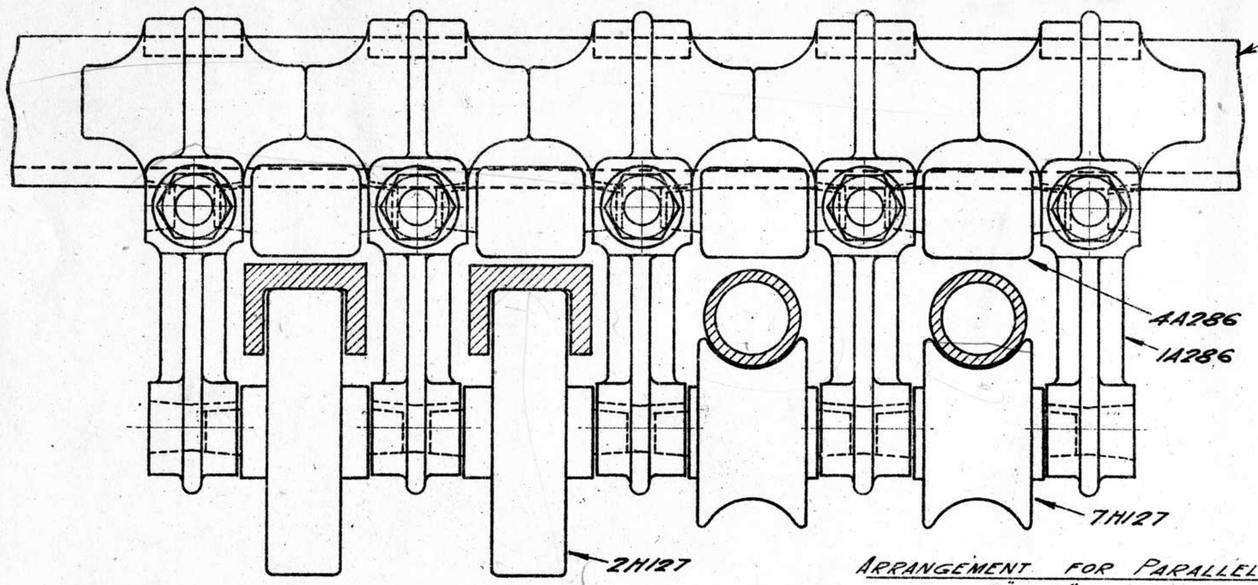

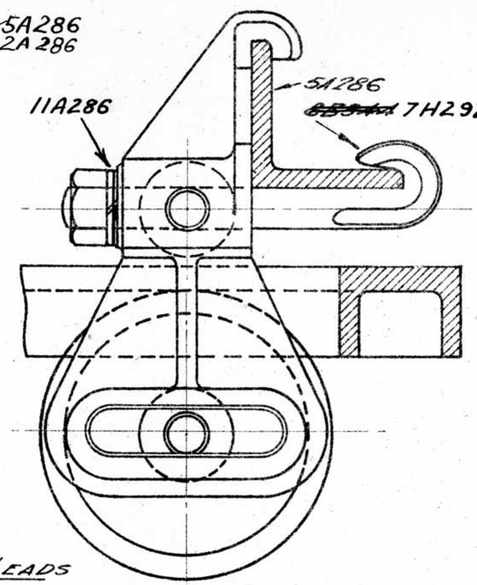

ARRANGEMENT FOR PARALLEL LEADS
3" & 6" CENTRES
For 6" centres omit alternate leads.

1F3055
2F3055

For Channel Lead 1A80
For Pipe Lead 2A80

No	Name	Mat!	Quantity 1A80	Quantity 2A80
1A286	Side Frame	CI	See Note	See Note
2A286	" "	CI	"	"
3A286	" "	CI	"	"
4A286	Roller	CI	1. per lead	1. per lead
5A286	Angle Support	MS	1	1
2H127	Channel Roller	CI	1. per lead	—
7H127	Pipe Roller	CI	—	1. per lead
7H292 ~~8B344~~	Hook Bolt X = ~~4½"~~ 5" Y = 1"	MS	1. per frame	1. per frame
Stock	½" Spring Washers	S.Steel	1. per bolt	1. per bolt
"	⅝" ~~½"~~ Coach Screws	MS	2	2
~~11A286~~	Link M.C.I.	Hoop Iron	1 per lead	1 per lead

End Clip (When req'd) M.C.I

Note:- Information for Ordering

	1A286	2A286	3A286
For one lead	2	—	—
For parallel leads 3" centres	No. of leads+1	—	—
For parallel leads 4⅜" centres and less than 6" centres	2	No. of leads−1	No. of leads−1
For parallel leads 6" centres or greater	2 per lead	—	—

Part No. 5A286. length as required.

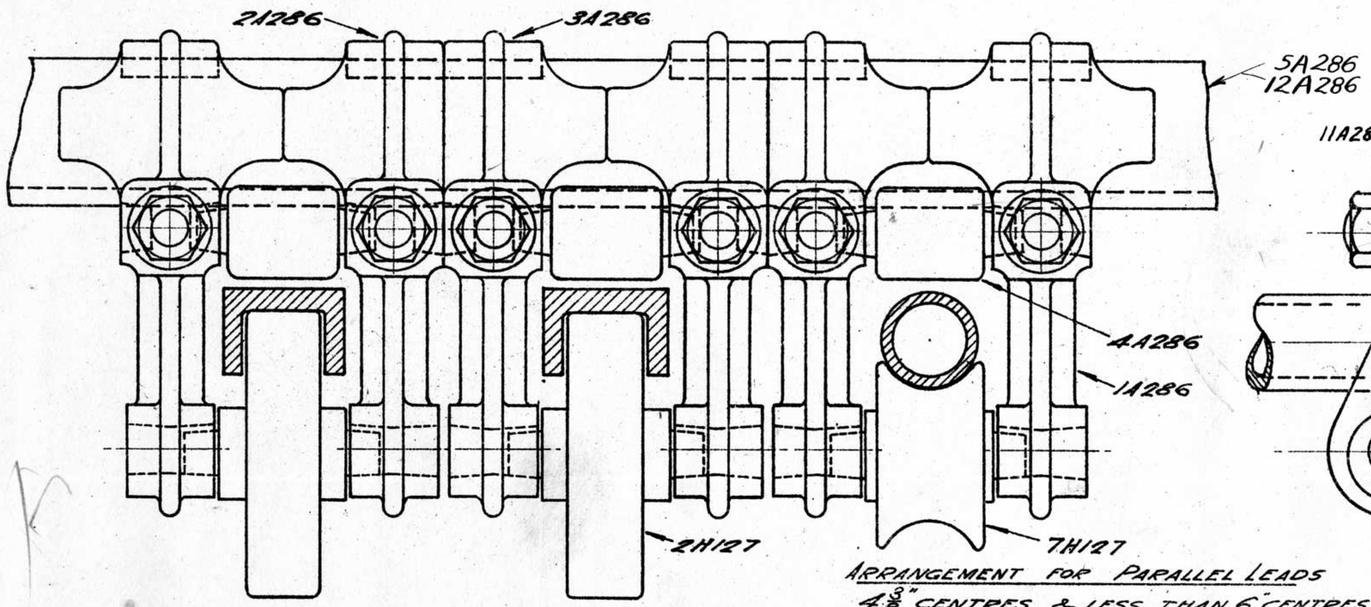

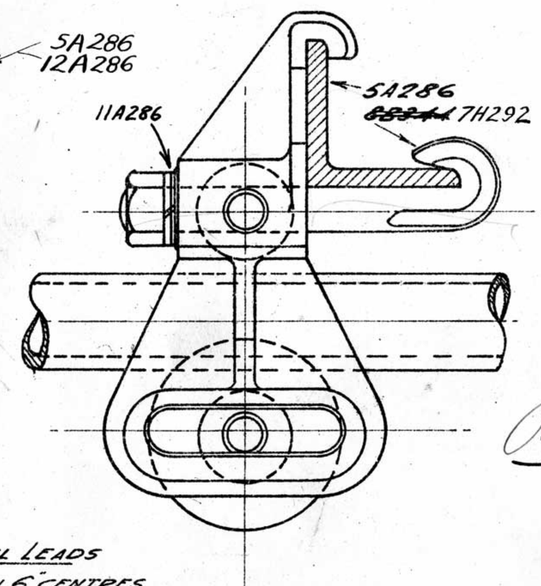

ARRANGEMENT FOR PARALLEL LEADS
4⅜" CENTRES & LESS THAN 6" CENTRES

Superseded. See Blue Print A80
[signature]
11-5-36

Redrawn & Revised on 29-4-36.
Ordering Part Nos 1A80 & 2A80 Cancelled. Part 12A286 added.

1 9-1-23
Part No 11A286 added.
L.322/23

Redrawn
Part No. 2A80 added
Original under same title dated 4-5-20.
R.G.C.

VICTORIAN RAILWAYS
TRANSVERSE
PIPE & CHANNEL CARRIER
Assembly
Scale 6" = 1 foot
18-11-21

Engineer of Signals	Drawn by F.W.H	Traced by F.W.H.
[signature]	W.P. [signature]	

A80

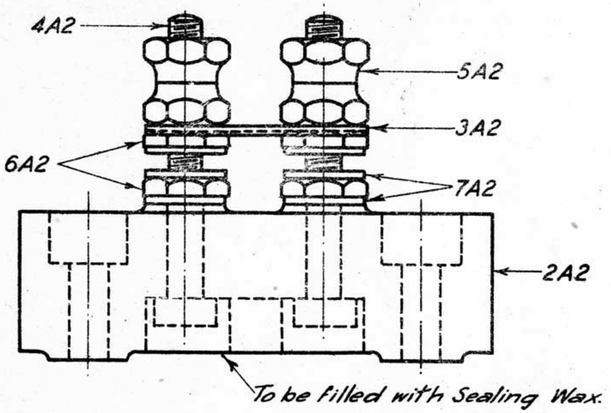

TERMINAL BLOCK COMPLETE — A2

No	NAME	MAT.L	QNTY.
2A2	Base	Porcelain	1
3A2	Connector	Brass	1
4A2	~~Bolt~~ Terminal	"	2
5A2	~~Binding Nut~~ Terminal Nut	"	4
6A2	Clamp Nut	"	4
7A2	Washer	"	6

25-5-29 A2

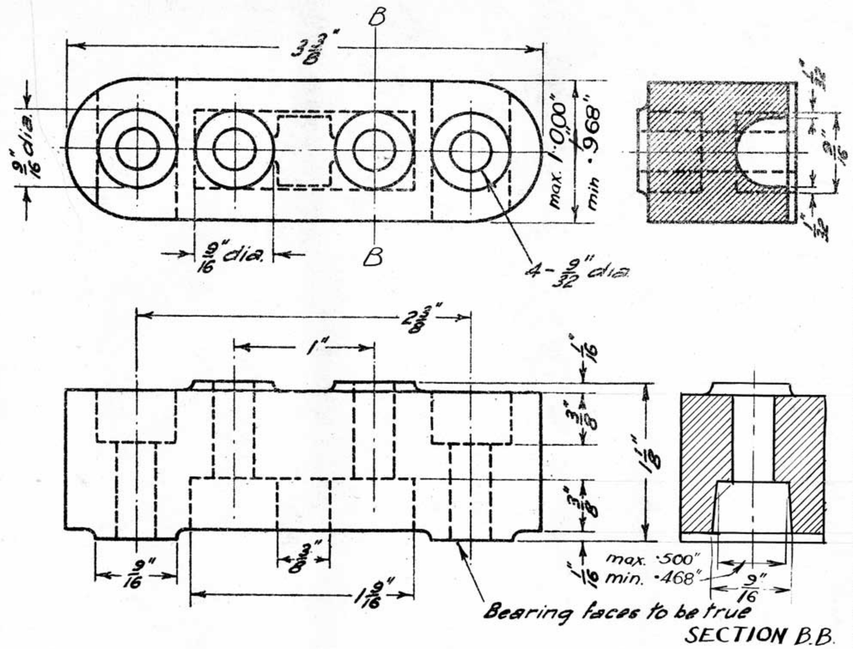

Porcelain
BASE

25-5-29 2A2

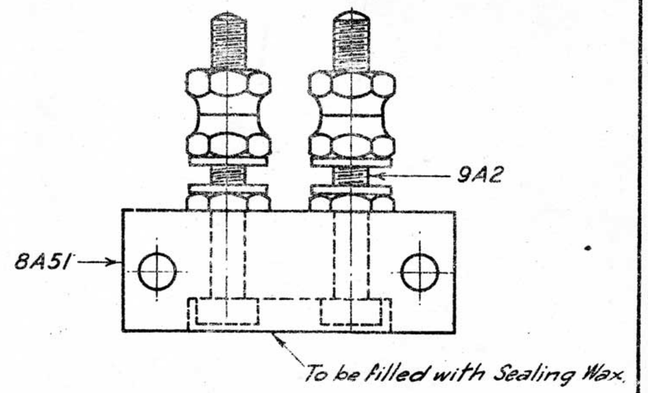

25-5-29 TERMINAL BLOCK COMPLETE 10A2

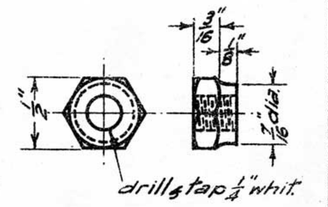

Brass
~~BINDING~~ TERMINAL
25-5-29 NUT 5A2

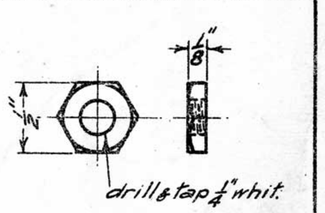

Brass
25-5-29 CLAMP NUT 6A2

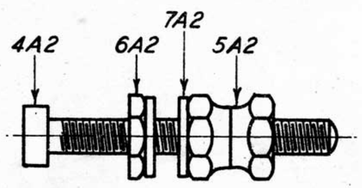

TERMINAL
~~BINDING POST~~ COMPLETE — 9A2

No	NAME	MAT.L	QNTY.
4A2	~~Bolt~~ Terminal	Brass	1
5A2	~~Binding Nut~~ Terminal Nut	"	2
6A2	Clamp Nut	"	1
7A2	Washer	"	2

25-5-29 9A2

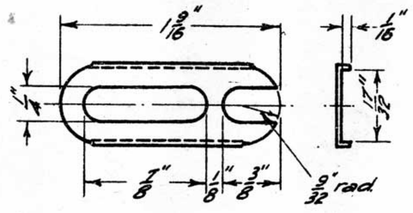

N°19 S.W.G.

Brass.
25-5-29 CONNECTOR 3A2

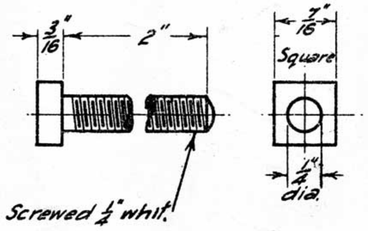

Note. Use 3/8" Sq. Brass Rod for 9A45 Fuze Blocks 10A45 Lightning Arresters.

Brass
~~BOLT~~ TERMINAL 4A2
25-5-29

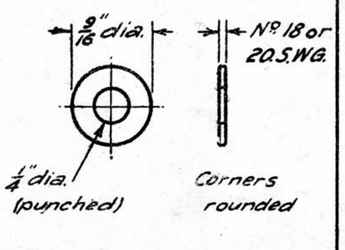

Brass
25-5-29 WASHER 7A2

Redrawn. Including Revision 1. Part N° 8A2 deleted & Part N° 10A2 added. Original under same number dated 11-12-16.

VICTORIAN RAILWAYS

TERMINAL BLOCKS

25-5-29

Chief Eng Sigs & Tels.	Drawn from Sample	Traced by L.J.P.

A2.

Stores
Section _____
Item Nº _____

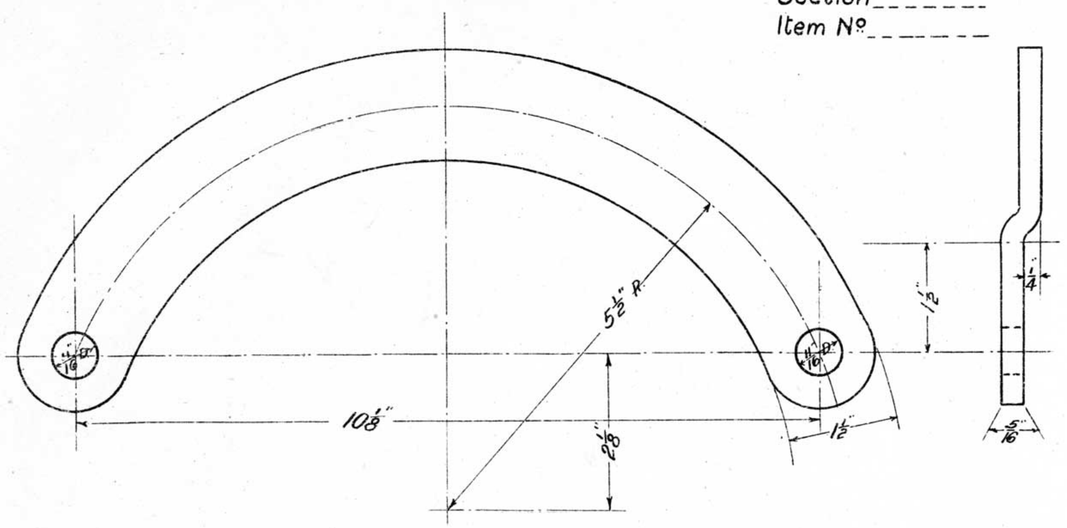

16-9-19 — Guide Bow (Mild Steel) for 100lb. Clip — 1A267

Stores
Section _____
Item Nº _____

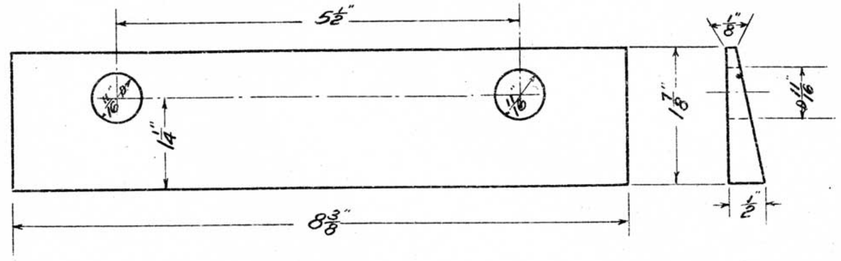

16-9-19 — Taper Bearing Plate (Mild Steel) — 2A267

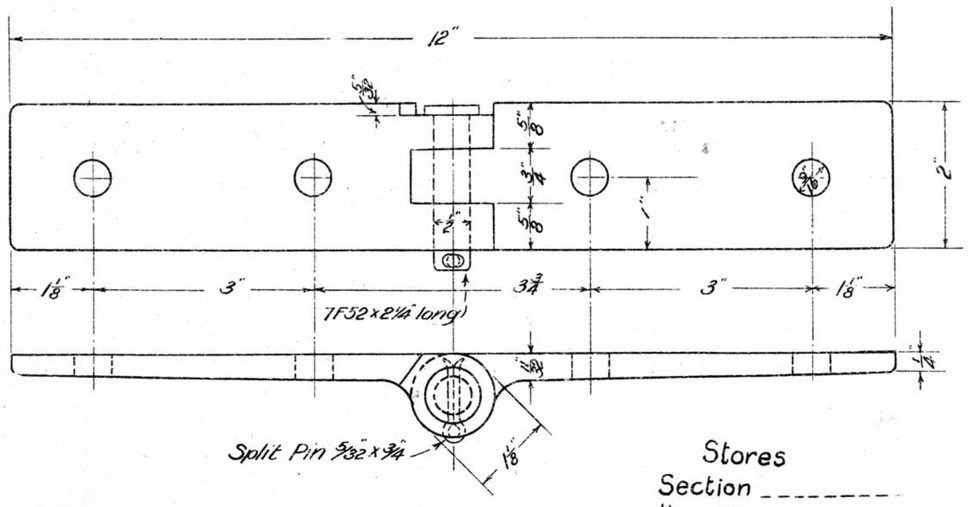

Stores
Section _____
Item Nº _____

16-9-19 — Hinge (Mild Steel) — 3A267

Stores
Section _____
Item Nº _____

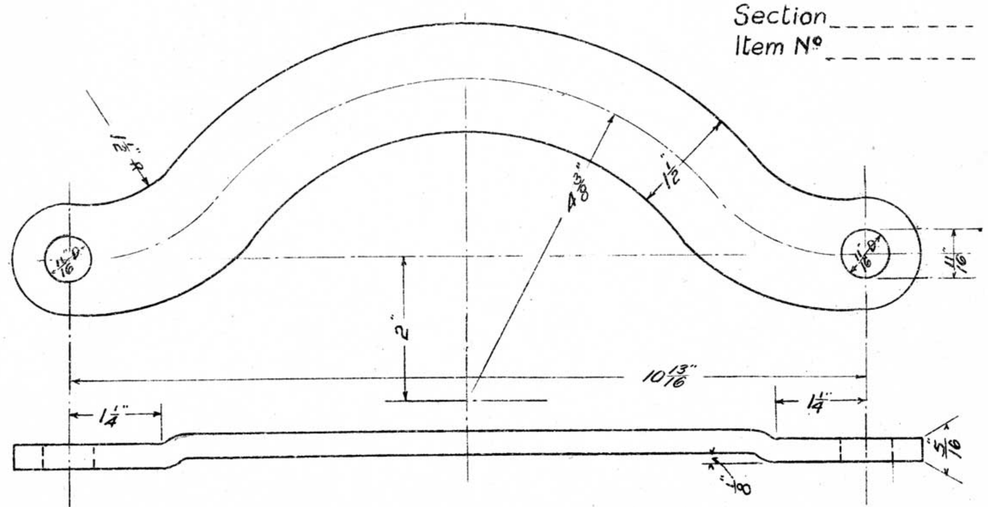

16-9-19 — Guide Bow (Mild Steel) for 80lb. Clip — 4A267

1 — 31-1-20
Guides Bows of Flat section are substituted for Bows of round section

VICTORIAN RAILWAYS

LOCK BAR FITTINGS

(Extra Parts)

Scale = ½ Full Size — 16-9-19

Engineer of Signals	Drawn by	Traced by

A 267

L.258/23

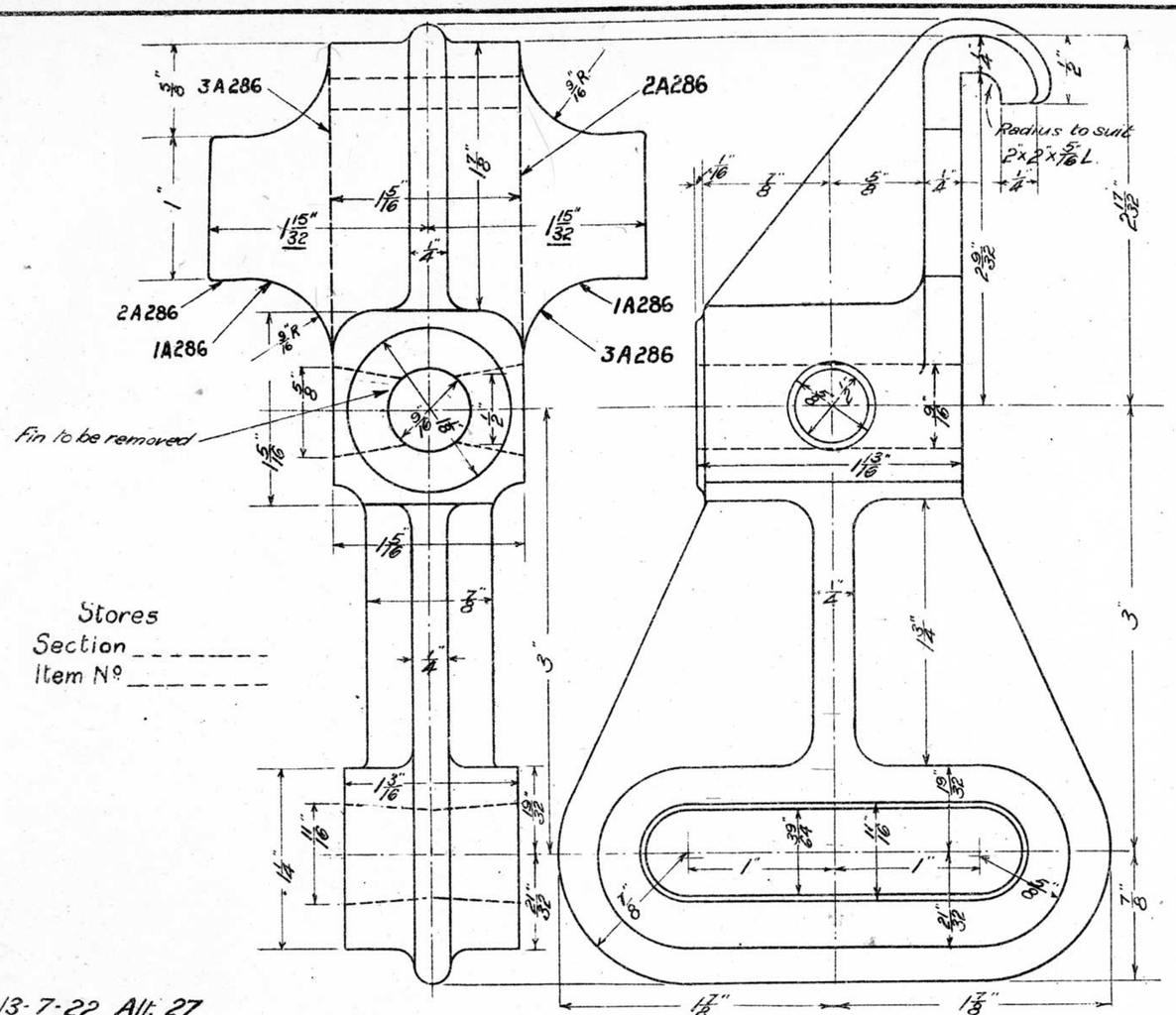

13-7-22 Alt. 27
6-11-19

Side Frame (Cast Iron)

Left Hand 3A286
Right Hand 2A286
1A286

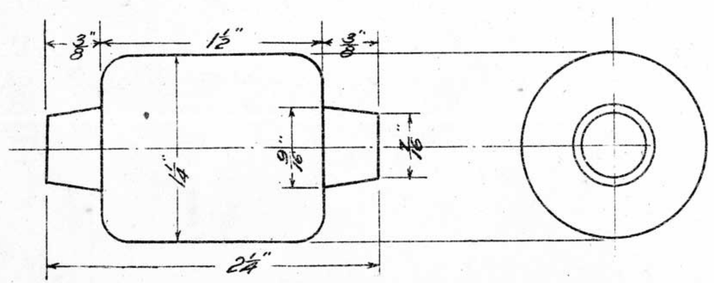

6-11-19

Top Roller (Cast Iron)

4A286

6-11-19
2-2-23 Alt. 40

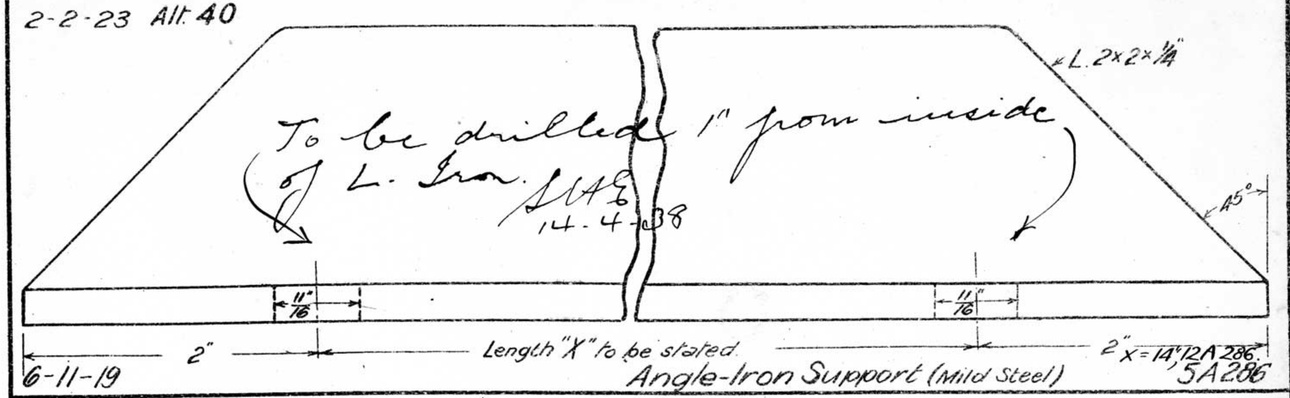

6-11-19

Angle-Iron Support (Mild Steel)

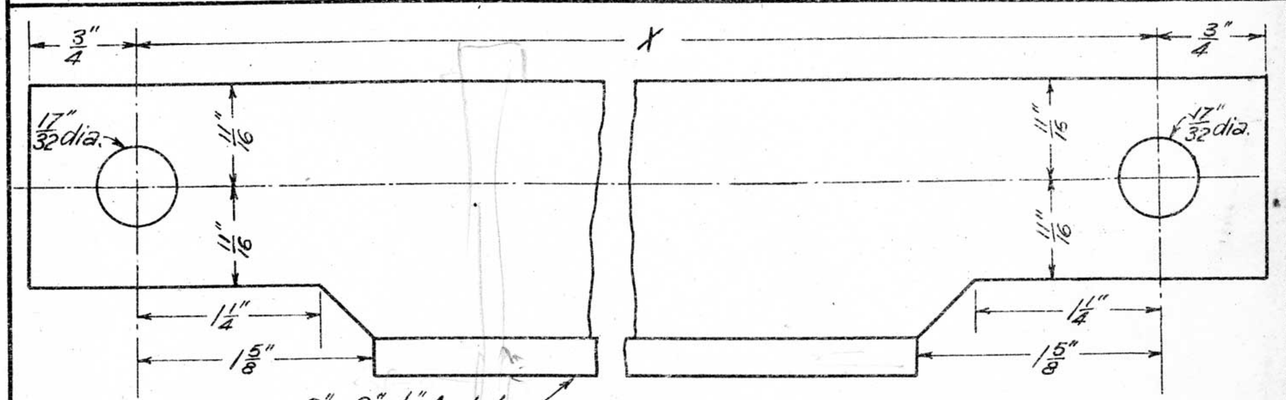

To be supplied with 2 - 1/2" bolts 1 1/2" long

For 8 Leads X = 2'-5 5/8" - 7A286
" 12 " X = 3'-5 1/2" - 6A286

26-7-22

Angle-Iron Support (M.S.)

Redrawn & revised on 4-1-24
See new Blue Print -

Redrawn

Rechawn 4-1-24.

20-10-37 Part 12A286 added.	2 26-7-22 Parts 6A286 and 7A286 added.	1 Redrawn. Supersedes Drawing A75. Part Nos revised.	

VICTORIAN RAILWAYS
TRANSVERSE
CHANNEL CARRIER

~~Scale Full Size~~ 6-11-19

Engineer of Signals	Drawn by	Traced by

A 286

L.258/23

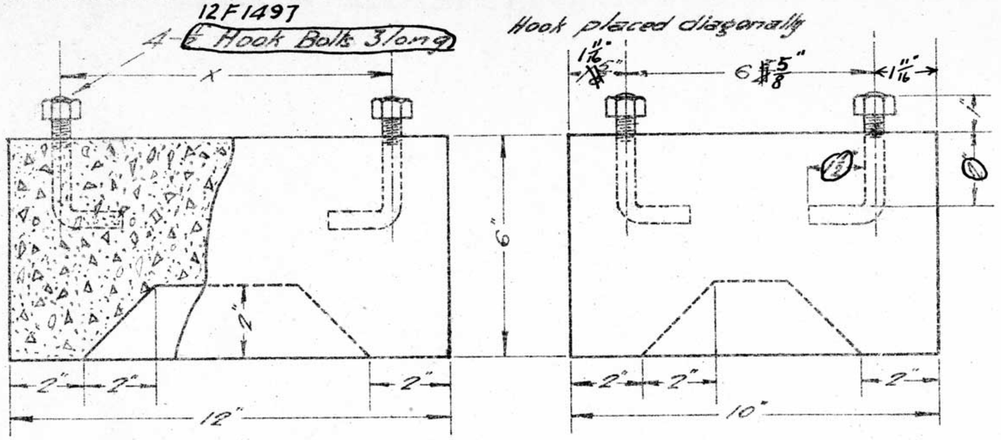

For 3 Way	X - 9" 3A301
" 2 "	X - 6" 2A301
" 1 "	X - 3" 1A301

14-3-22 FHN°21
23.12.21

FOUNDATION

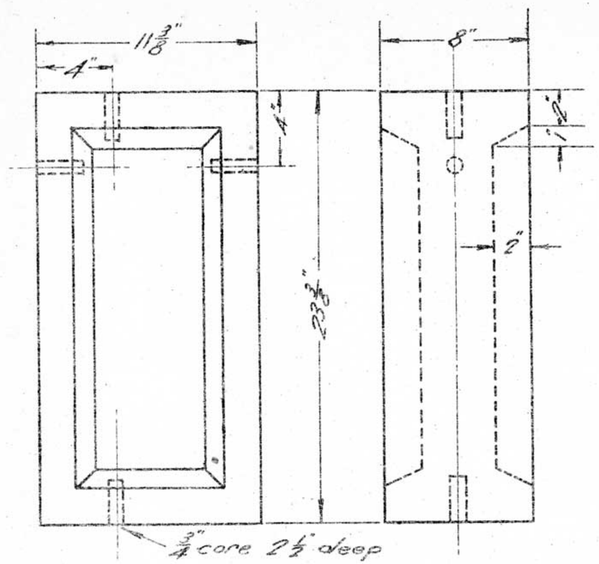

23.12.21 FOUNDATION 13A301

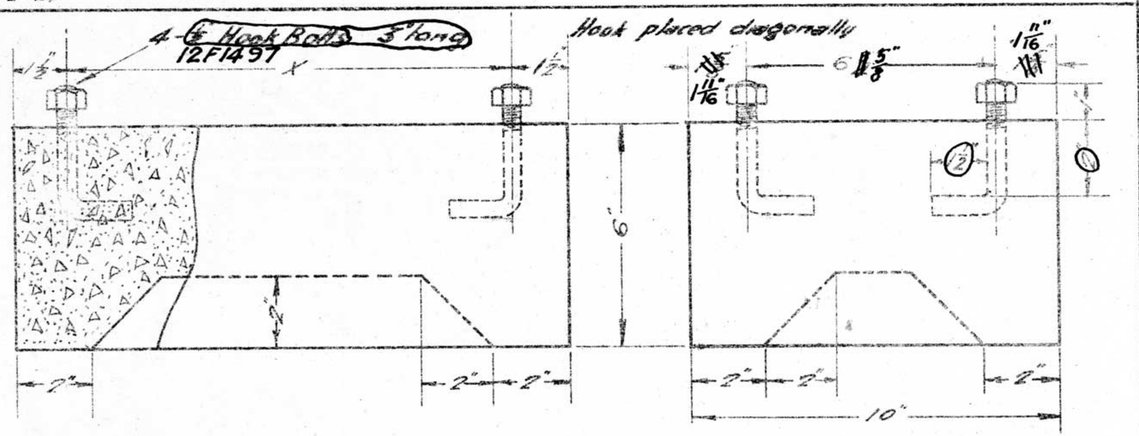

For 12 Way	X - 3'-0" 12A301
" 10 "	X - 2'-6" 10A301
" 8 "	X - 2'-0" 8A301
" 6 "	X - 18" 6A301
" 4 "	X - 12" 4A301

14-3-22 FHN°21
23.12.21

FOUNDATION

Redrawn Parts 5 & 7A301 added.

See Blueprint

Supersedes Drg. S179

VICTORIAN RAILWAYS
CONCRETE FOUNDATIONS FOR PIPE AND CHANNEL CARRIERS
Details

23-12-21

Engineer for Signals	Drawn by	Traced by
	F.W.H.	F.W.H.
	W.P.	

A301

L.282/23

Covers

1A311 - 2 off 6K98 , 1 off 2K98

2A311 - 2 off 6K98

Angle Iron Support

1A311 - 1 off 6A286

2A311 - 1 off 7A286

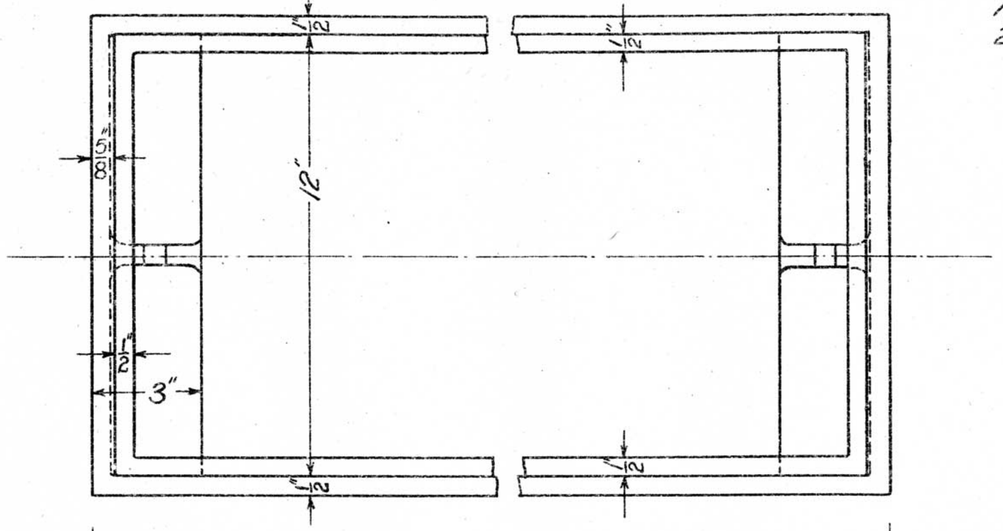

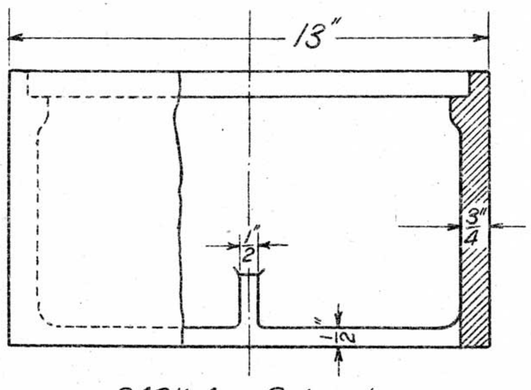

2A311 for 8 Leads

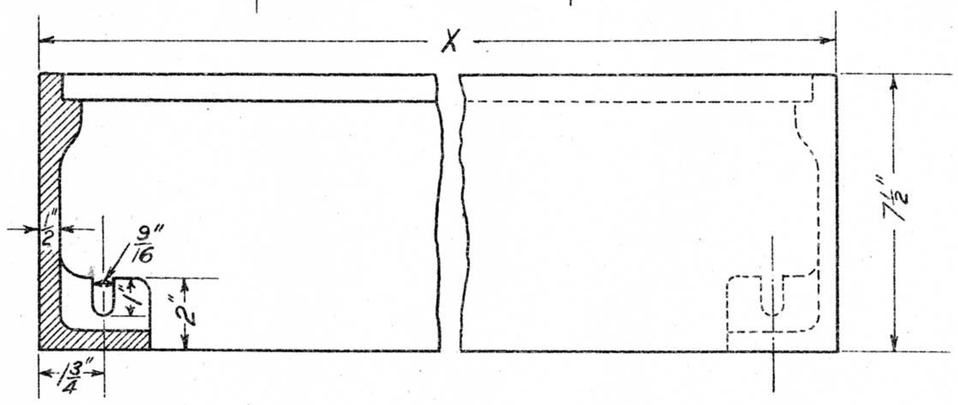

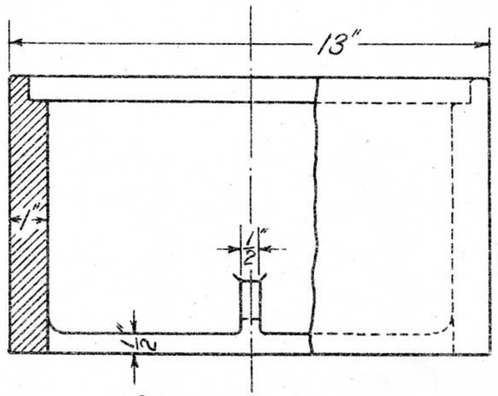

1A311 for 12 Leads.

For 8 Leads X=2'-9 1/8" 2A311

For 12 Leads X=3'-9" 1A311

27-7-22

Inspection Chamber C.S.

VICTORIAN RAILWAYS

INSPECTION CHAMBERS.

27-7-22

Chief Eng' of Sig's & Tel's	Drawn by	Traced by
	R.G.C.	R.G.C.

A311

L.268/23

BEARING COMPLETE 1A312

No.	Name	Mat'l	Qnty
2A312	Bearing	C.I.	1
9B427	Cap	"	2
11B427	Pin	M.S.	1
Stock	Bolts 5/8" Whit - 3 1/4" long - Sq Hd	"	4
"	Spring Washer 5/8"	S.S.	4

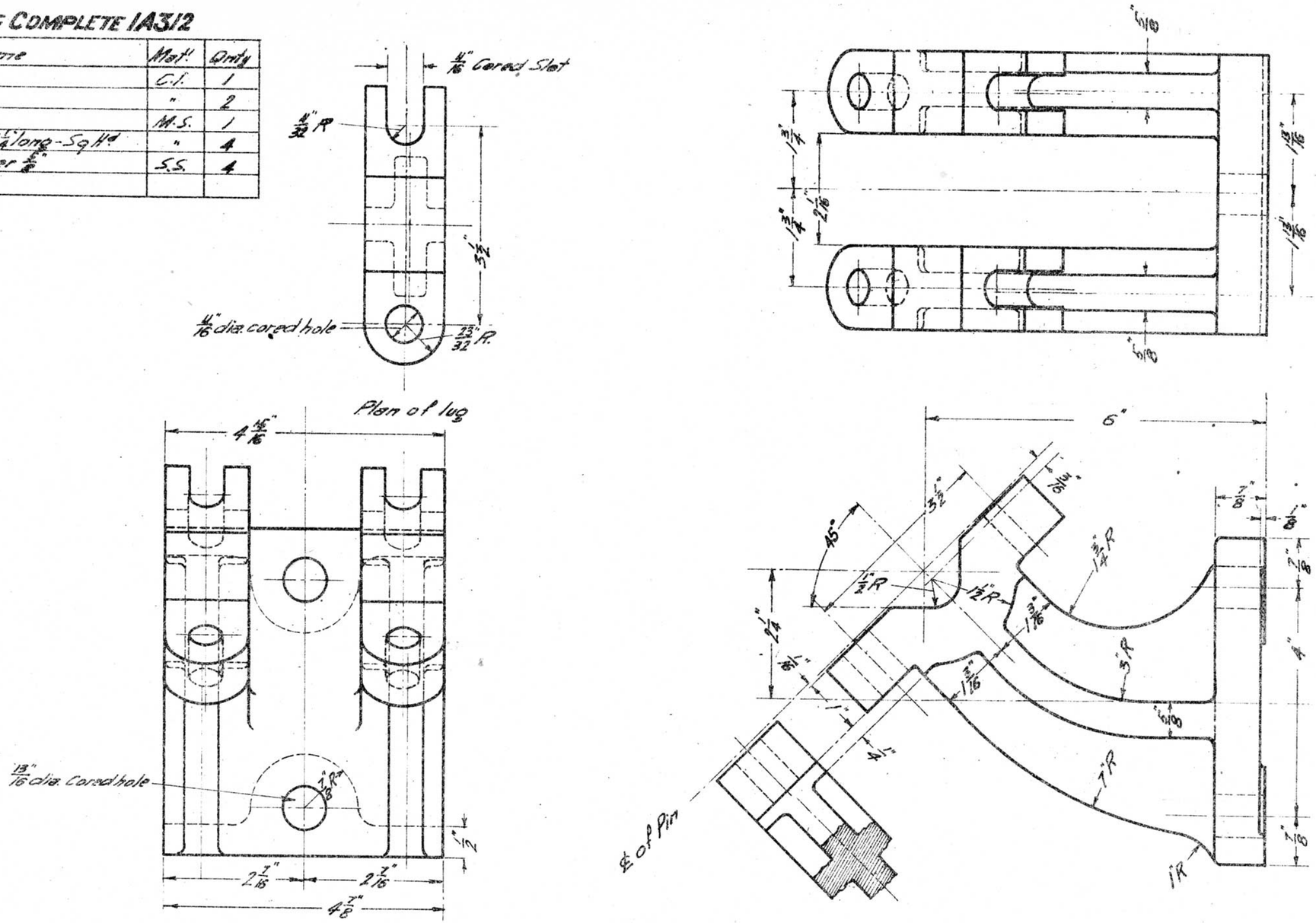

2A312

VICTORIAN RAILWAYS
BEARING FOR VERTICAL CRANK

Chief Eng of Sigs & Telegs	Drawn by F.J.W.	Traced by F.J.W.

2-8-22

A312

L.7B/27

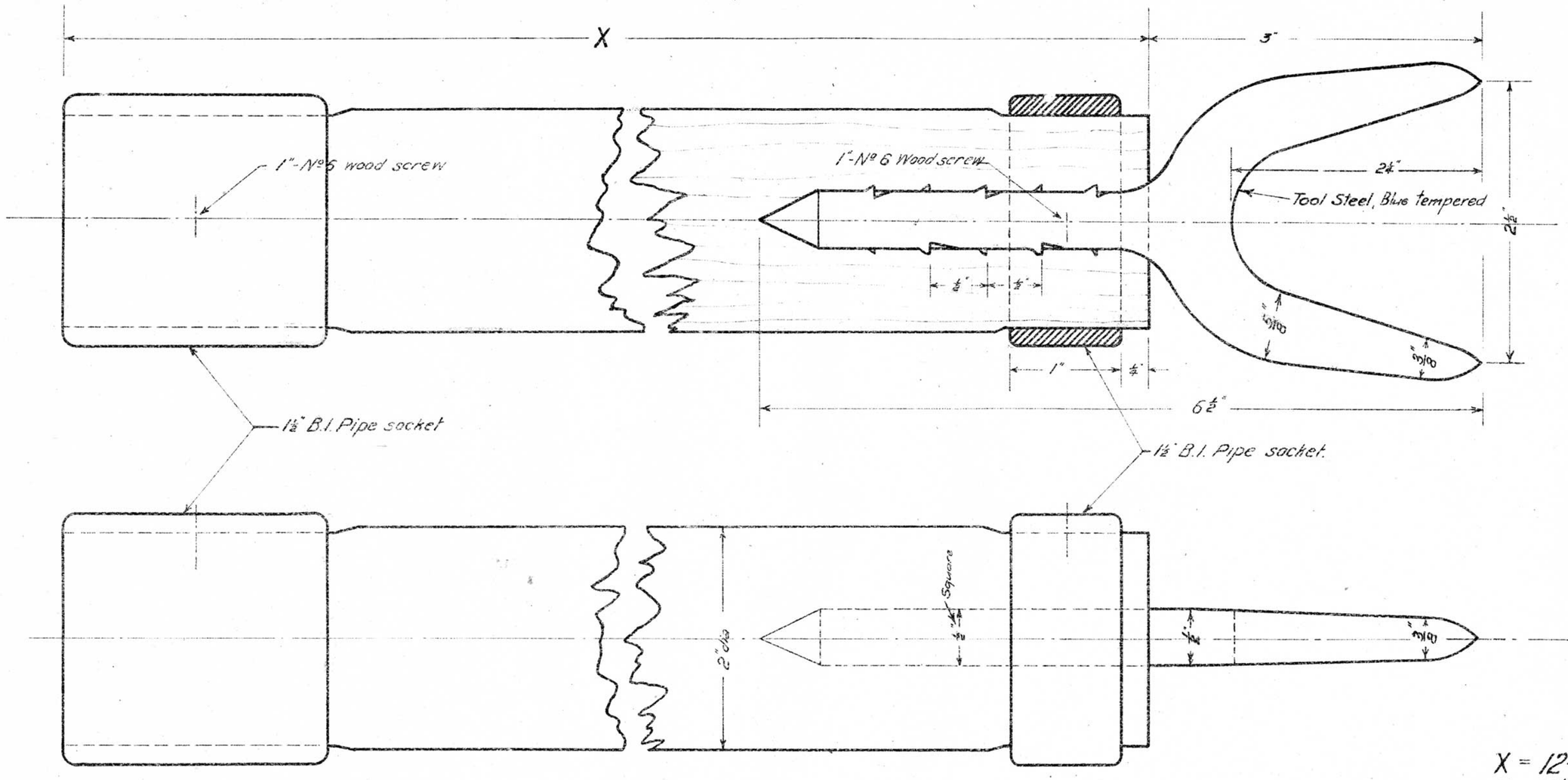

X = 12'-0"-4A313
X = 10'-0"-3A313
X = 8'-0"-2A313
X = 6'-0"-1A313

15-6-23 Alt. No 47
4-8-22

	VICTORIAN RAILWAYS POLE PIKES (Line Dept) 4-8-22	Chief Engr of Sig & Teleg	Drawn by A.D.G.	Traced by A.D.G.
L.268/23				A313

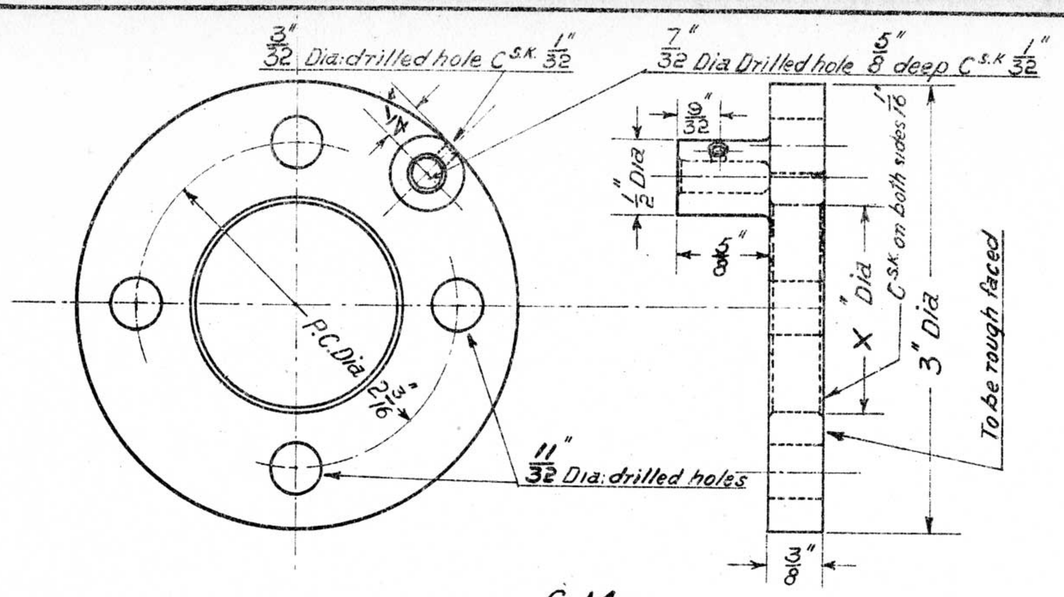

29-8-22 G.M Clamp Ring 2A315

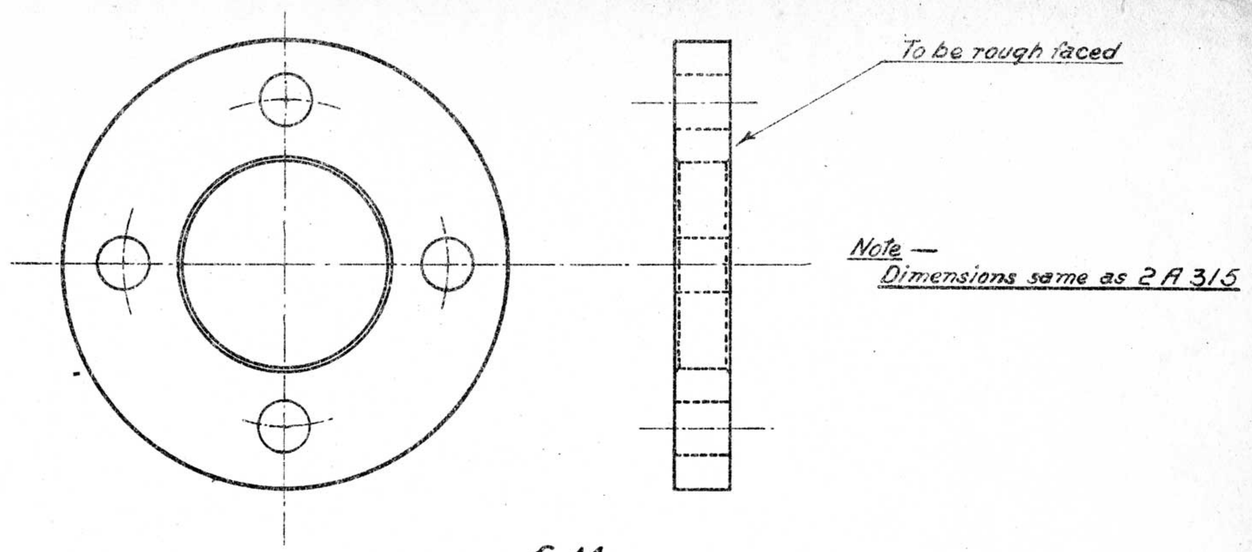

Note — Dimensions same as 2A315

29-8-22 G.M Clamp Ring 3A315

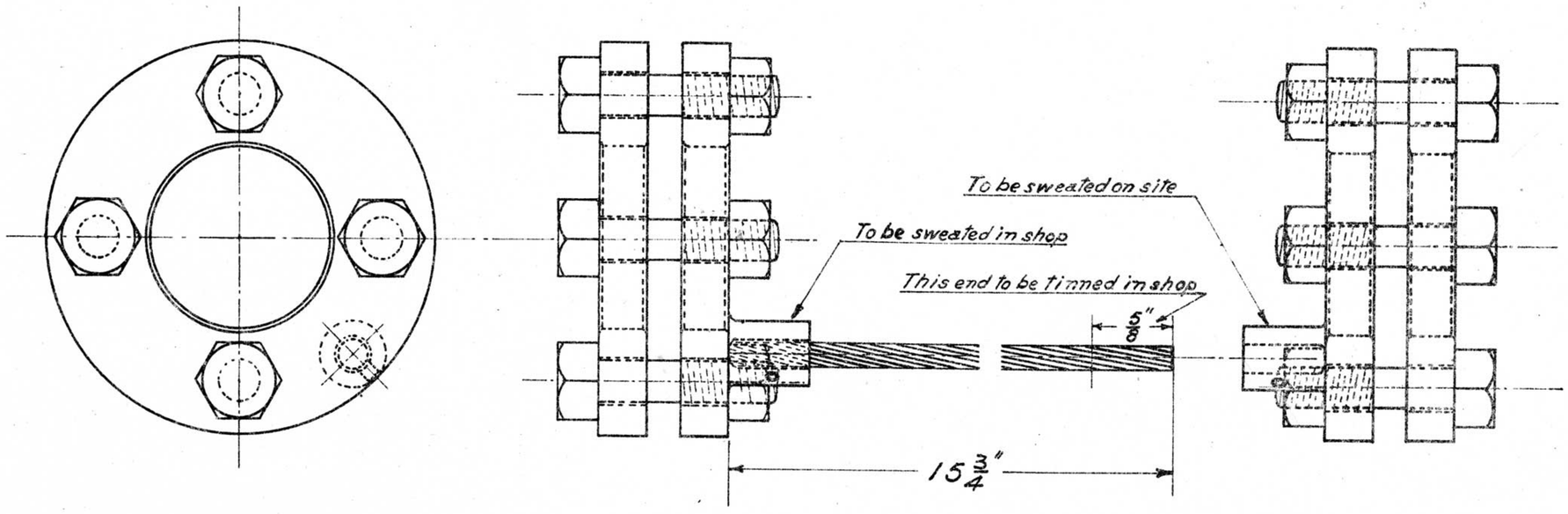

Note — Internal dia "X" of clamp ring to be given when ordering.

Clamp complete — 1A315

Nº	NAME	QUANTY
2A315	Clamp Ring G.M	2
3A315	" " "	2
Stock	Bolts 5/16" dia x 1 3/8" long Hex Hd (threaded 3/4" up) with nuts	8
	Copper wire (annealed) Nº 7/16 15 3/4" long	1

29-8-22 Assembly

Superceded by Drawing A456

VICTORIAN RAILWAYS
ARMOUR CLAMP
FOR
2200V CABLE RUNNING JOINT

29.8.22

Chief Engr of Sigs & Teleg	Drawn by C.E.W.	Traced C.E.
	W.D.	

A 315

Stores
Section –
Item No –

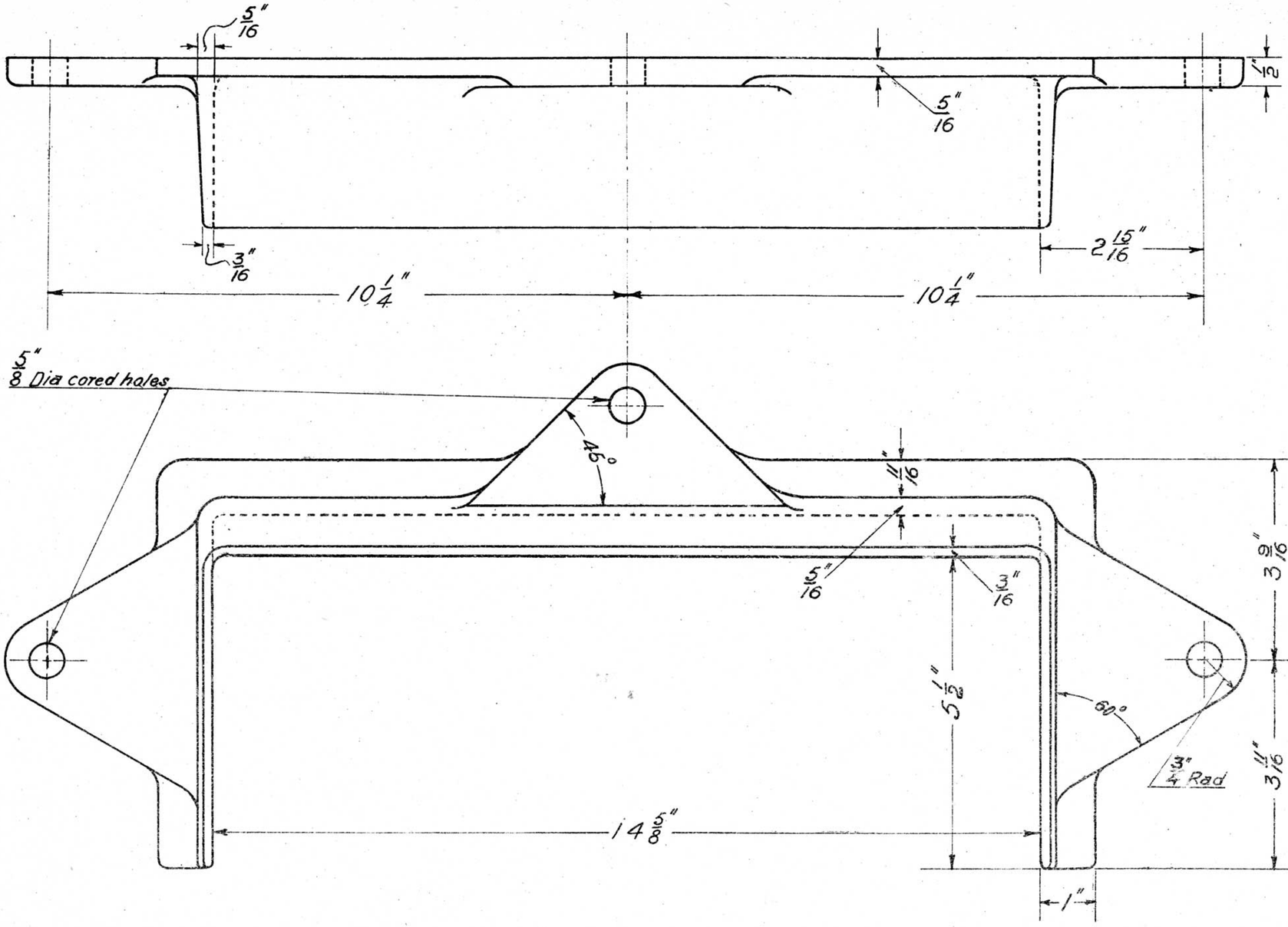

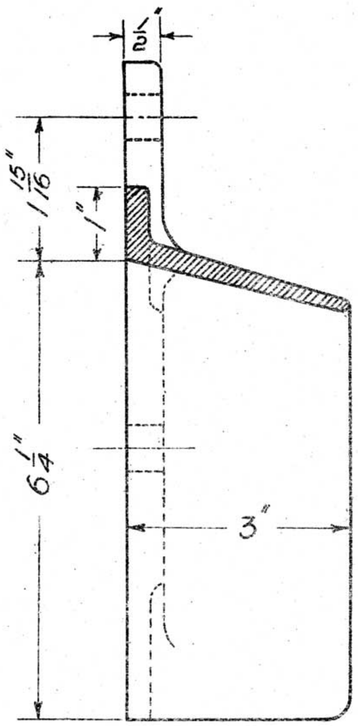

C.1
Weather Cap

5.9.22

A317

VICTORIAN RAILWAYS WEATHER CAP 5.9.22	Chief Eng[r] of Sigs & Teleg[s]	Drawn by C.E.W.	Traced by C.E.W.

A317

L294/23

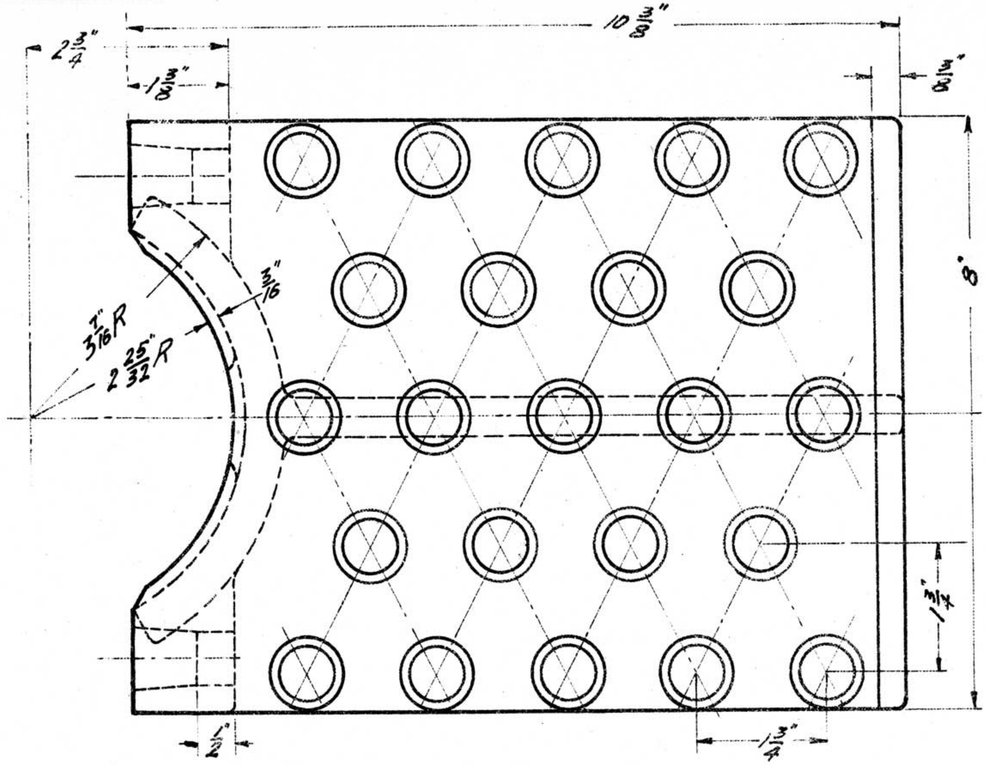

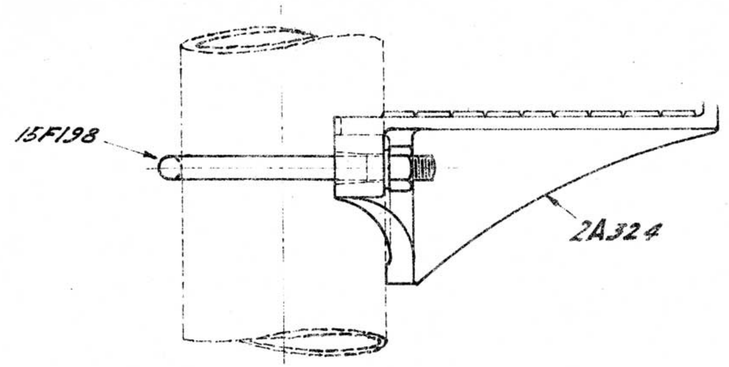

Assembly

23-2-23 Step 2A324-U-Bolt 15F198 & 2-5/8 Spring Washers 1A324

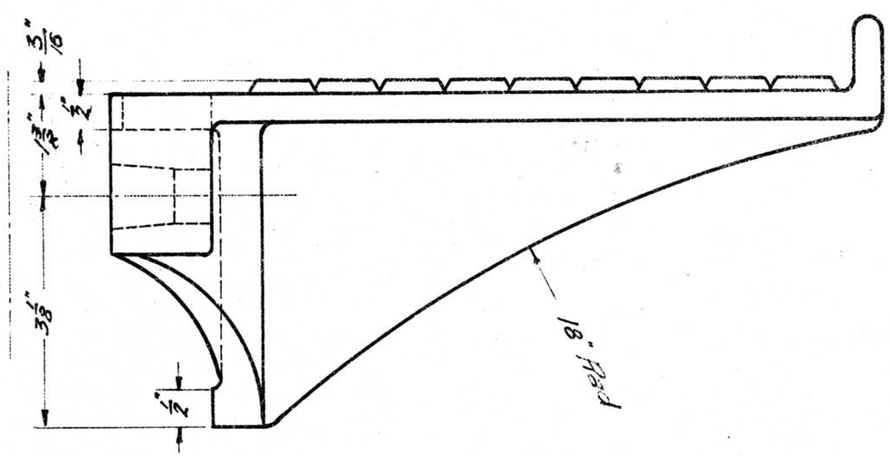

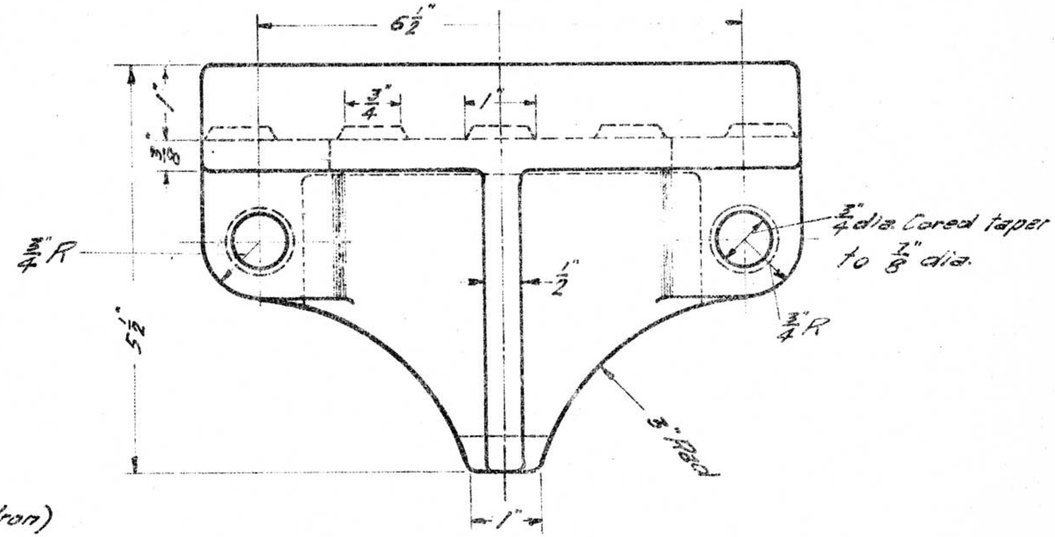

(Malleable Cast Iron)

Step

23-2-23 2A324

VICTORIAN RAILWAYS
STEP FOR 5 1/2" MAST

Chief Engr. of Sig. & Teleg.	Drawn by F.J.W.	Traced by F.J.W.

A324

23-2-23

L.58/27

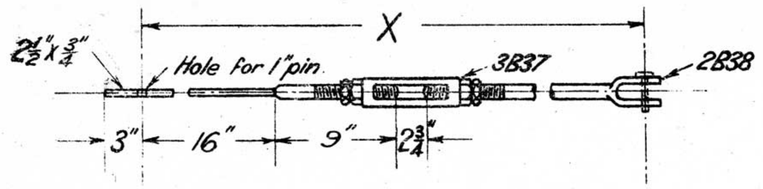

8-8-23 1A327

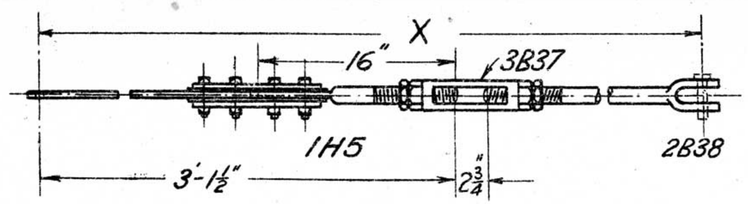

8-8-23 5A327

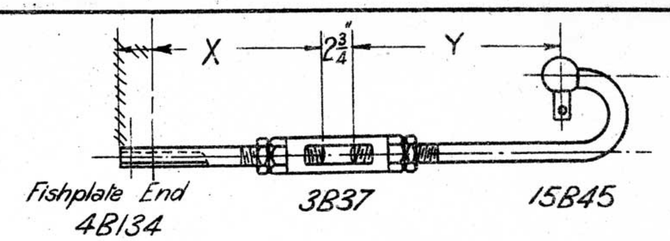

8-8-23 9A327

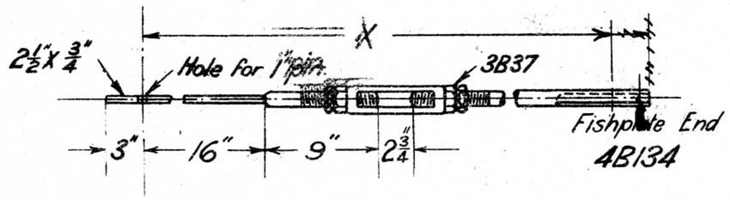

8-8-23 2A327

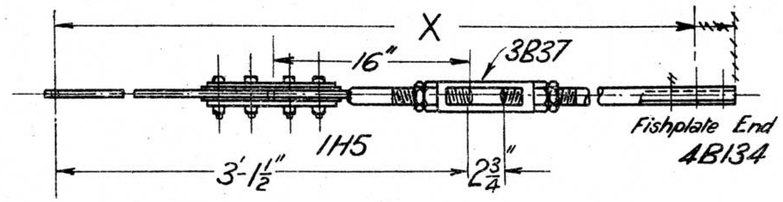

8-8-23 6A327

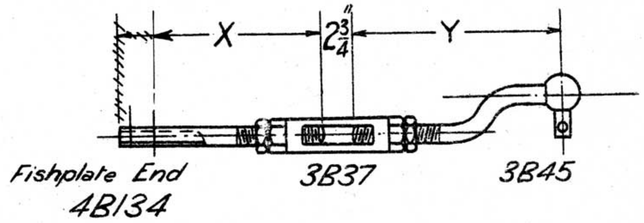

8-8-23 10A327

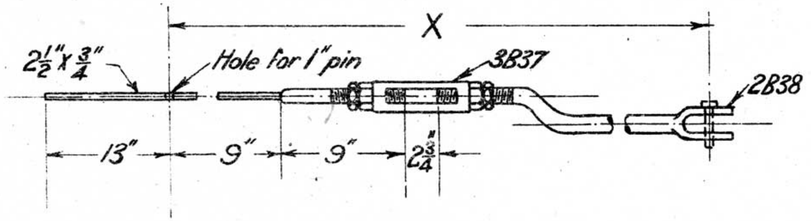

Standard Set = 2"

8-8-23 3A327

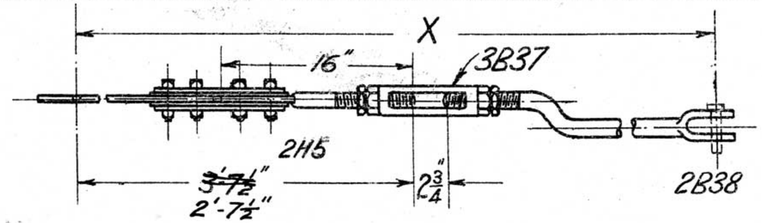

Standard Set = 2"

8-8-23 7A327

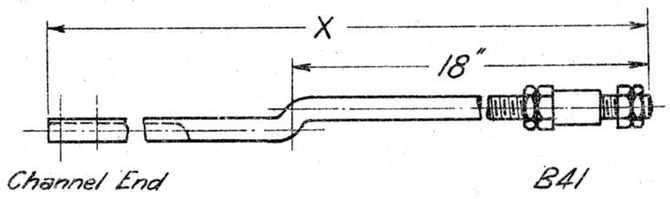

Standard X = 8'-0"
" Set = 1"

8-8-23 11A327

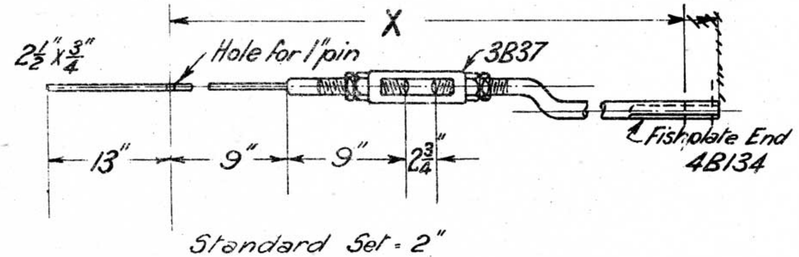

Standard Set = 2"

8-8-23 4A327

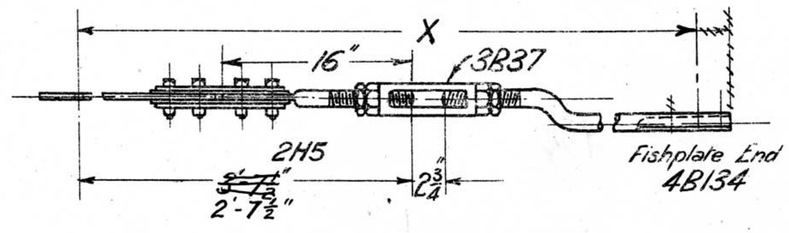

Standard Set = 2"

8-8-23 8A327

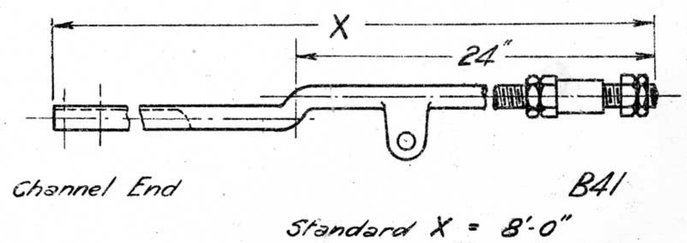

Standard X = 8'-0"
" Set = 1"

8-8-23 12A327

L294/23

VICTORIAN RAILWAYS
OPERATING RODS for POINT LAYOUTS

8-8-23

Chief Engr of Sigs & Telegs.	Drawn by	Traced by
	R.G.C.	R.G.C.

A327

D.C. BELL COMPLETE
Wound for Low Resistance 1A329.
" " High " 2A329.

Nº	Name	Material	Quantity
2B456	Armature & Hammer	—	1
3B456	Yoke	Soft Iron	1
4B456	Core	" "	2
5B456	Contact Spring	Spring Steel	1
6B456	Bracket	Brass	1
7B456	Contact Spring	Spring Steel	1
8B456	Arm	Brass	1
9B456	Cover Clip	Spring Steel	2
10B456	Insulating Bush	Fibre	4
11B456	Ferrule	"	2
12B456	Windings (High or Low Resistance)	—	2
13B456	Insulating Strip	Fibre	1
14B456	" Base	"	1
15B456	" Washer	"	4
16B456	Bobbin Cheek	"	4
17B456	Gong	Brass	1
18B456	Base	Aluminium	1
19B456	Cover	"	1
9A2	Binding Post	Brass	2
	Screws 5B.A. 7/16" Long 1/8" dia head	"	2
	" 5B.A. 9/16" Long 3/16" " "	"	2
1F883	" 5B.A. 1/4" Long	"	4
"	" 4B.A. 3/8" Long	"	2
"	Screw 5B.A. 1/2" Long & Lock Nut	"	1
4F883	" 2B.A 1/2" Long	"	1

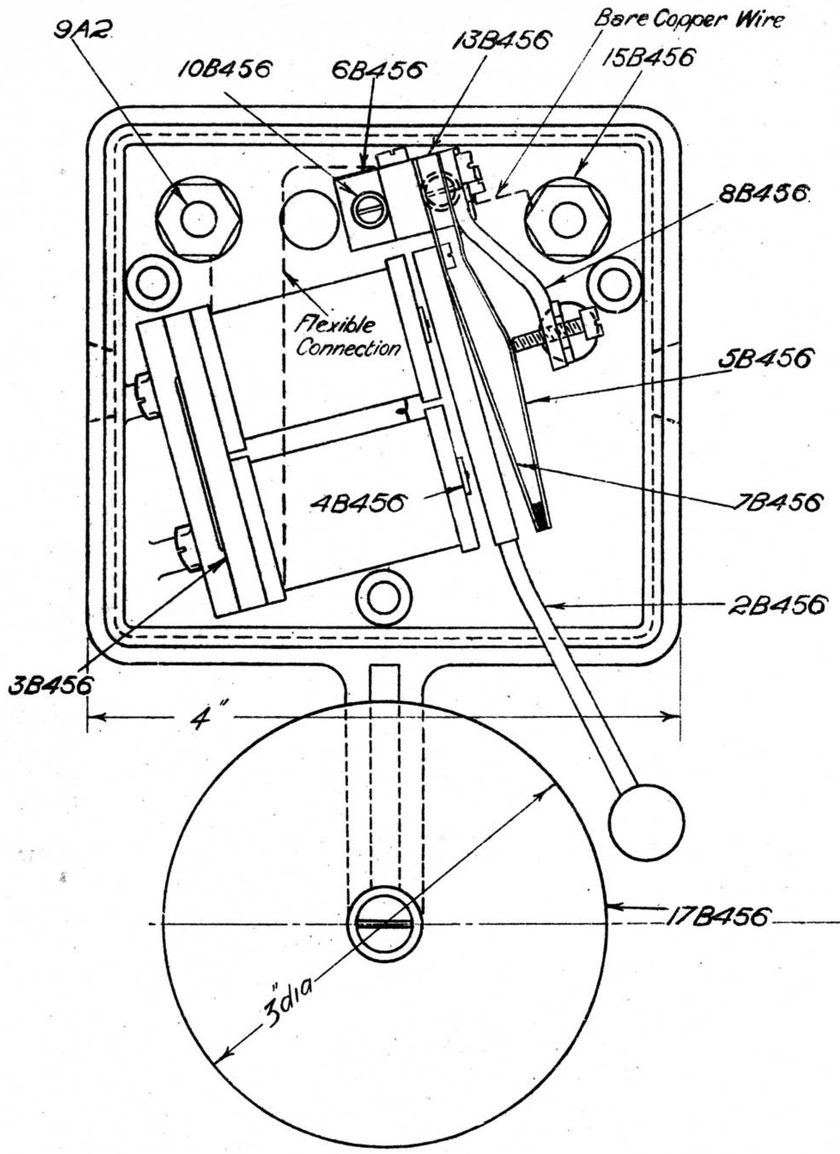

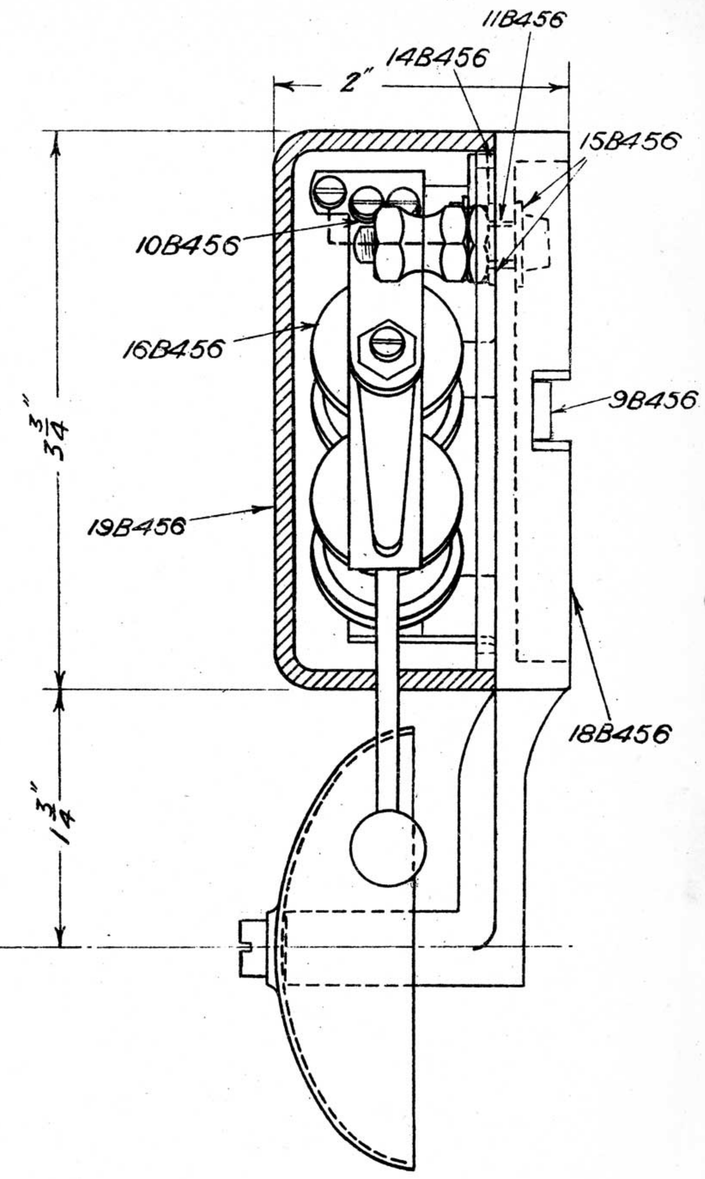

15·3·23
Redrawn.
Previously Drg.
N134.

VICTORIAN RAILWAYS.

D.C.BELL
Assembly

15·3·23.

Chief Engr of Sigs & Telegs	Drawn by G.W.S	Traced by G.W.S.
	W.P.	

A329

L.79/27

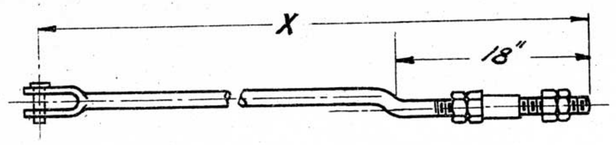

Standard Set = 1"

23-3-23 previously 14H122 **1A331**

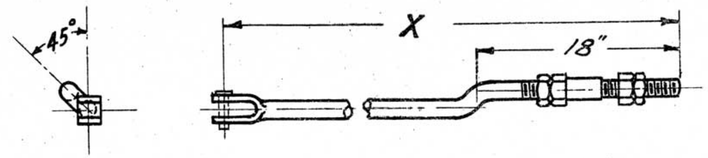

Standard Set = 2"

23-3-23 previously 12H122 **5A331**

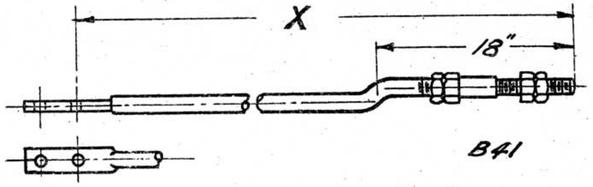

Standard Set = 1"

23-3-23 previously 9H122 **9A331**

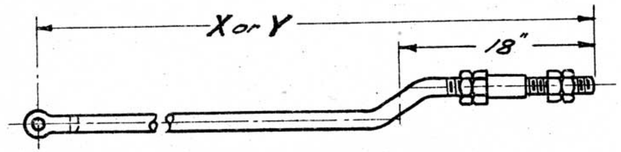

Standard Set = 1½"

23-3-23 previously 11H122 **2A331**

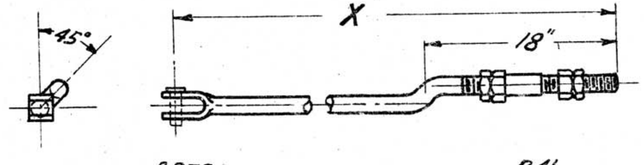

Standard Set = 2"

23-3-23 previously 13H122 **6A331**

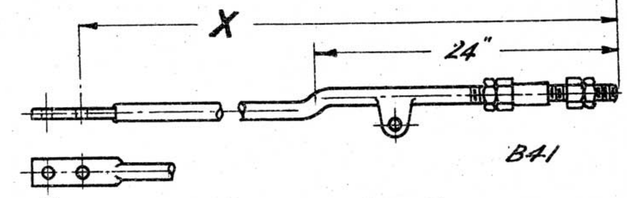

Standard Set = 1"

23-3-23 previously 10H122 **10A331**

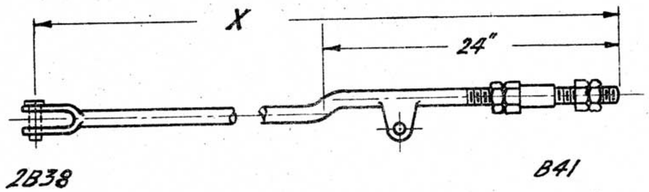

Standard Set = 1"

23-3-23 **3A331**

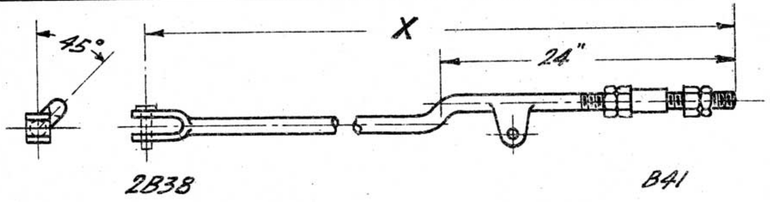

Standard Set = 2"

23-3-23 **7A331**

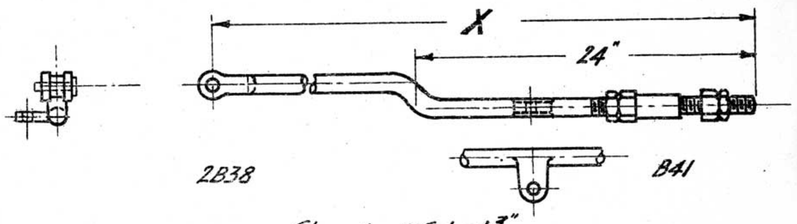

Standard Set = 1¾"

23-3-23 previously 8H122 **11A331**

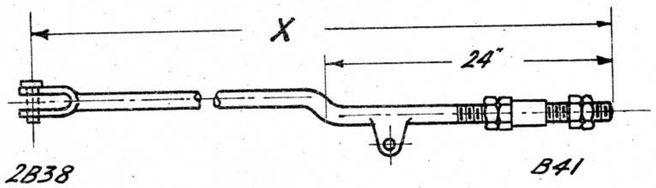

Standard Set = 1"

23-3-23 **4A331**

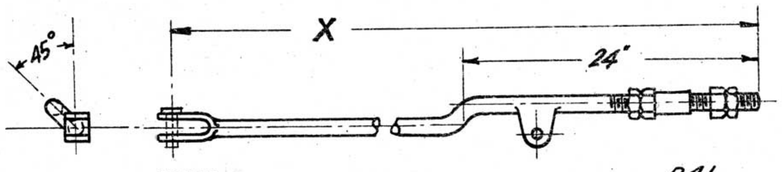

Standard Set = 2"

23-3-23 **8A331**

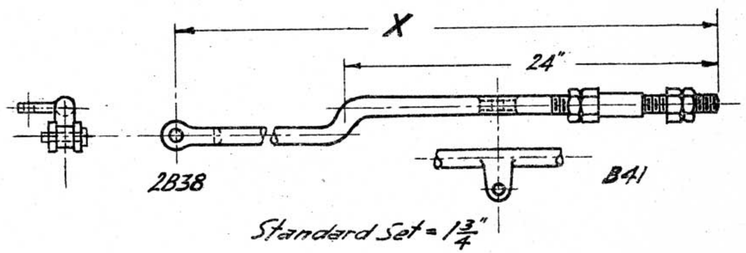

Standard Set = 1¾"

23-3-23 previously 16H122. **12A331**

VICTORIAN RAILWAYS
OPERATING RODS FOR POINT LAYOUTS

23-3-23

Chief Engr. of Sigs & Tels	Drawn by	Traced by
	F.J.W.	F.J.W.

A331

L.294/23

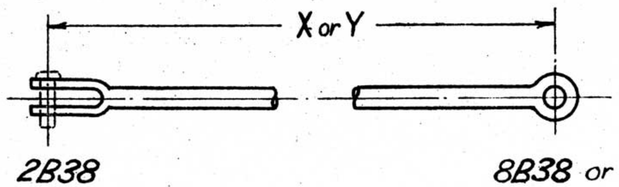

2-7-23 1A332

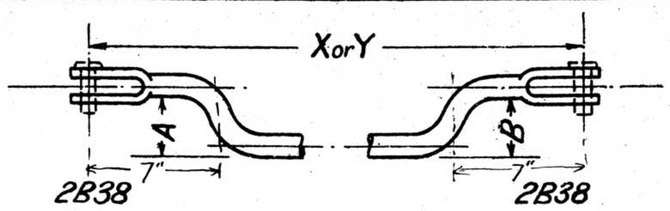

Standard Sets 1½" & 3"

2-7-23 5A332

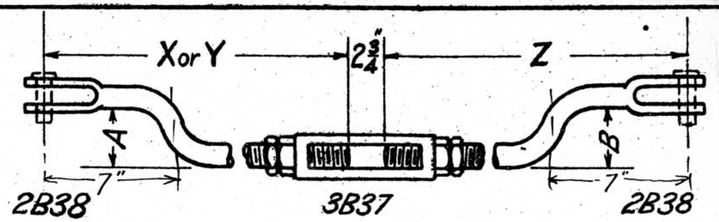

Standard Sets 1½" & 3"

2-7-23 9A332

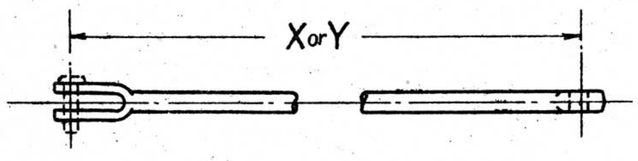

2-7-23 2A332

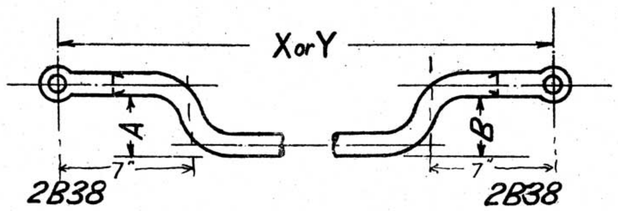

Standard Sets 1½" & 3"

2-7-23 6A332

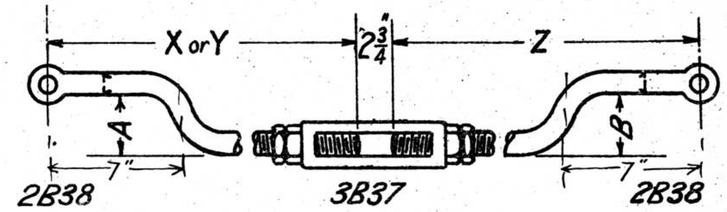

Standard Sets 1½" & 3"

2-7-23 10A332

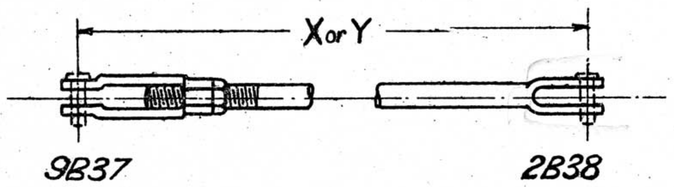

2-7-23 3A332

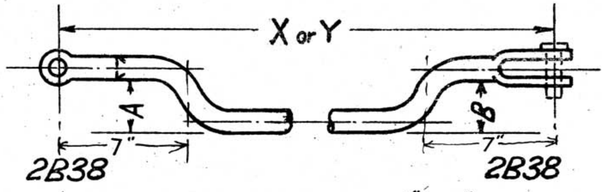

Standard Sets 1½" & 3"

2-7-23 7A332

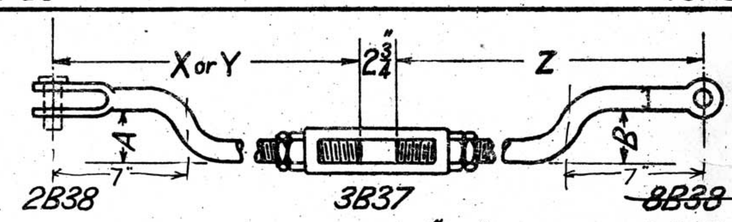

Standard Sets 1½" & 3"

2-7-23 11A332

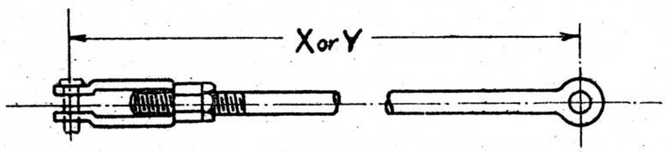

2-7-23 4A332

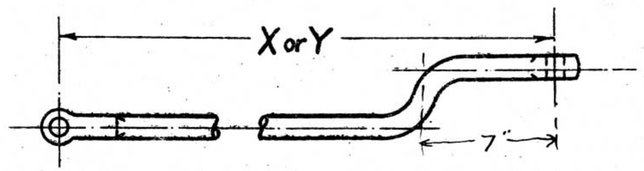

Standard Sets 1½" & 3"

2-7-23 8A332

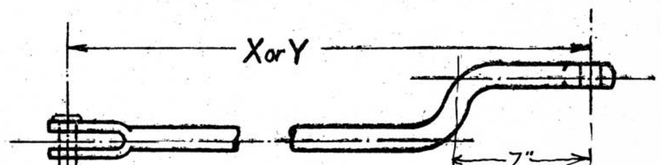

Standard Sets 1½", 2", & 3"

2-7-23 12A332

L.293/23

NOTE
Amount of set to be stated Long Jaw 2H186 or Wide Jaw 3H186 will be supplied, if specified, stating at which end required.

VICTORIAN RAILWAYS
1¼" dia. CONNECTING RODS
EYE & JAW ENDS
2-7-23

Chief Engr of Signals	Drawn by	Traced by
	R.G.C.	R.G.C.

A332

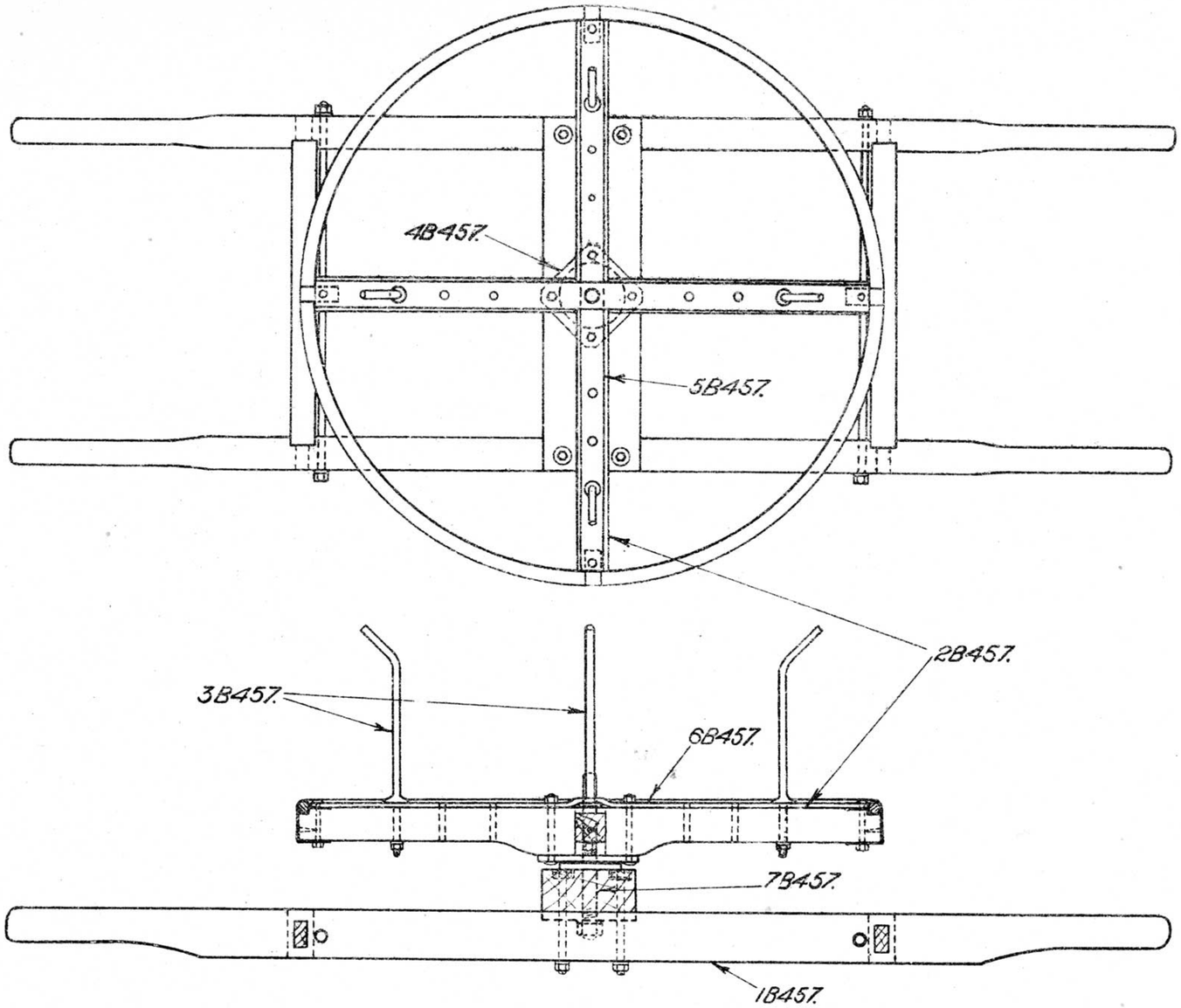

Nº	Name	Material	Quantity
1B457	Carrier	Wood	1
2B457	Reel	"	1
3B457	Standard	W.Iron.	4
4B457	Bearing Plate	M.S.	1
5B457	Strap	"	1
6B457	Strap	"	1
7B457	Spindle	W.Iron	1
Stock.	½" Bolt 23" Long & 2 Washers		2
	½" Bolt 6" Long & 2 Washers.		4
	⅜" Coach Bolt 2½" Long & 1 Washer		4.
	⅜" Coach Bolt 4" Long		4
	⅛" Split Pin 1" Long		4
	1" 20 S.W.G. Hoop Iron 6" Long		4
	Nº 8 R.H. Wood Screws 1" Long		4

Stores
Section —
Item Nº —

VICTORIAN RAILWAYS

PAYOUT REEL

ASSEMBLY.
For 12" 18" & 24" Coils.

11·4·23.

Chief Eng'r of Sigs & Telegs	Drawn by G.W.S.	Traced by G.W.S.
[signature]	[signature]	

A333

L.233/23

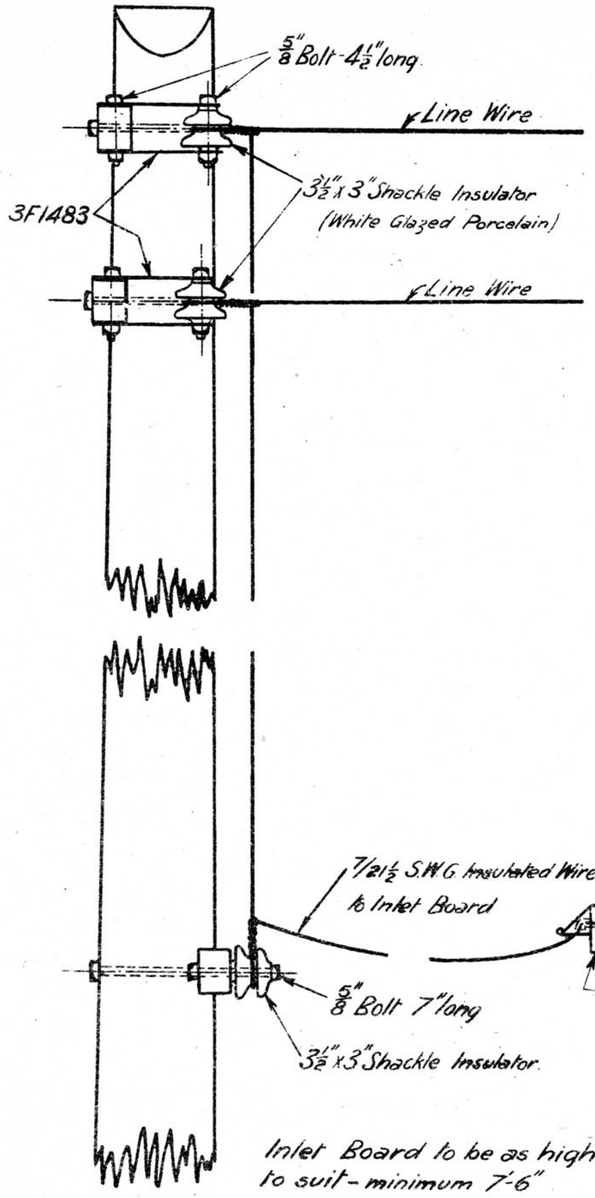

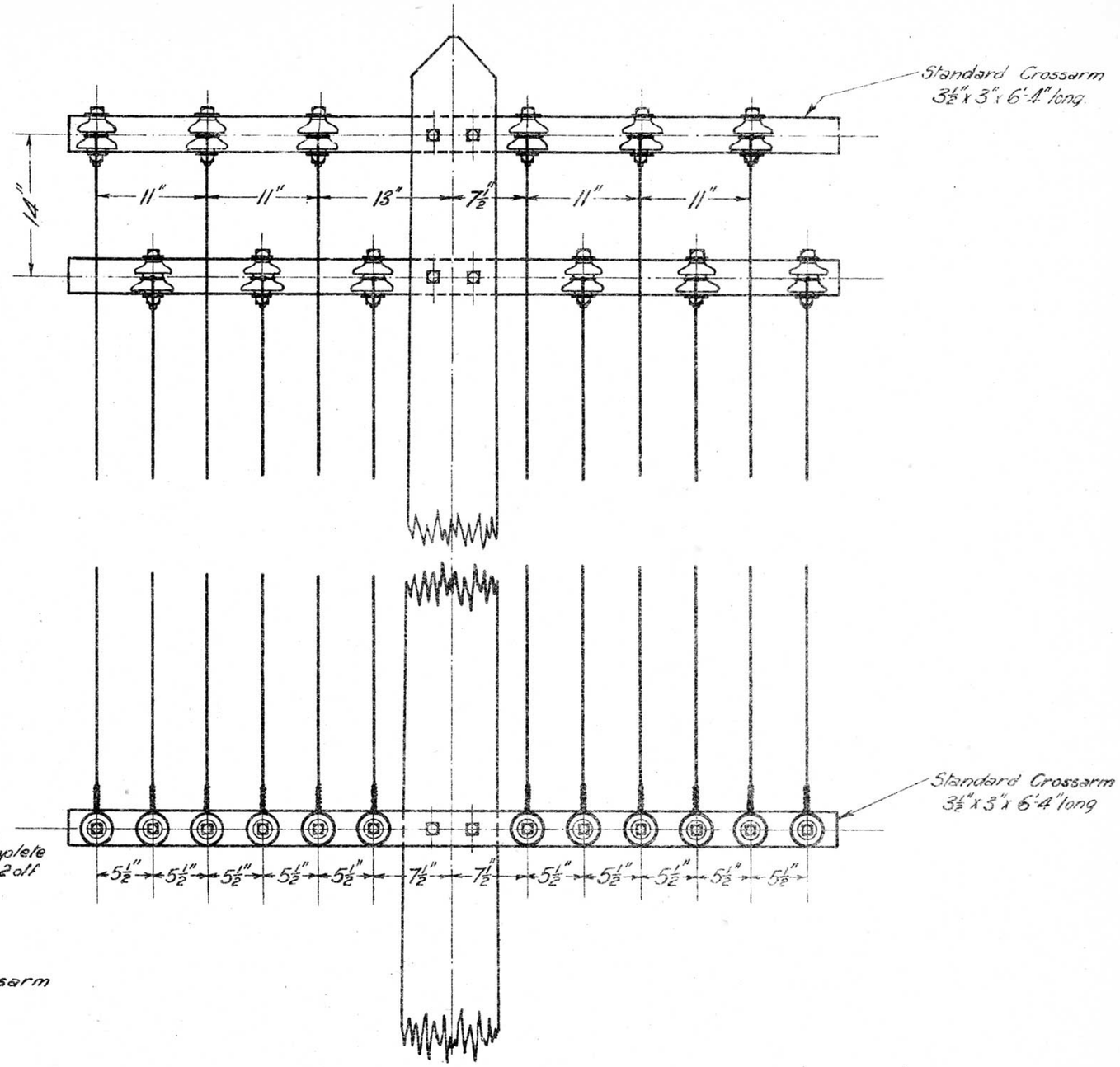

VICTORIAN RAILWAYS

Telegraph Line Fittings

Leading-In Pole

Assembly

10-5-23

Chief Eng. of Sigs & Tels.	Drawn by	Traced by
	R.G.C.	R.G.C.

A334

L.79/27

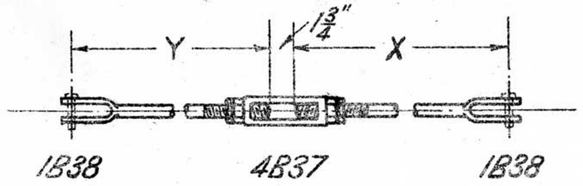

6-7-23 previously 1H122 **1A337**

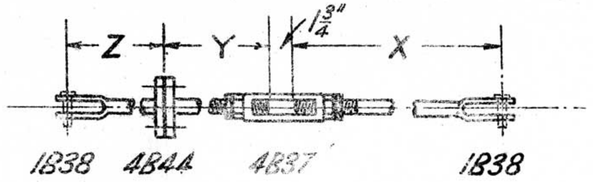

6-7-23 previously 2H122 **5A337**

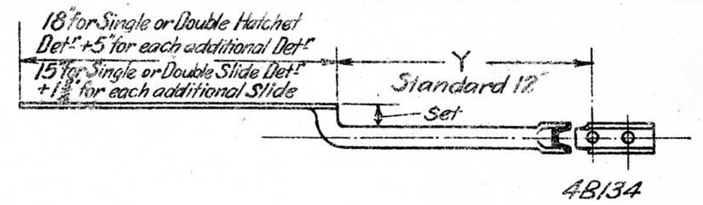

Blade 1¼" x 5/16" Set = ¾" 16A337
" 2" x 5/16" " = 1½" 15A337
" 2" x 5/16" " = ½" 9A337

6-7-23

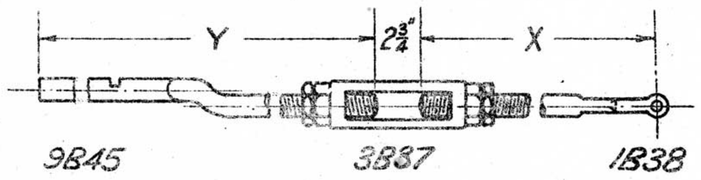

6-7-23 previously 5H122 **2A337**

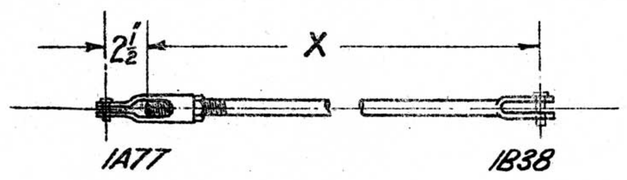

6-7-23 previously 4H122 **6A337**

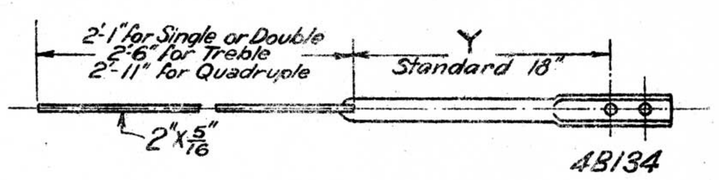

6-7-23 **10A337**

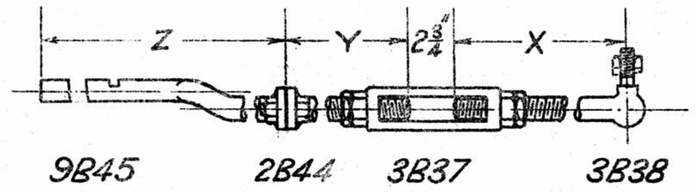

6-7-23 previously 6H122 **3A337**

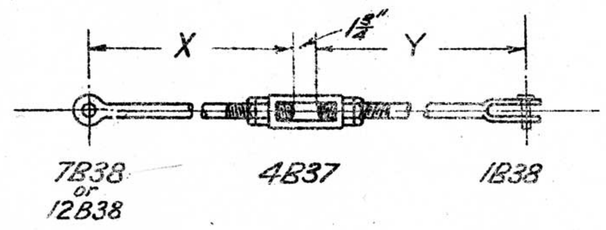

10-4-30.
6-7-23. Previously 3H122

With Eye 12B38 17A337
" " 7B38 7A337

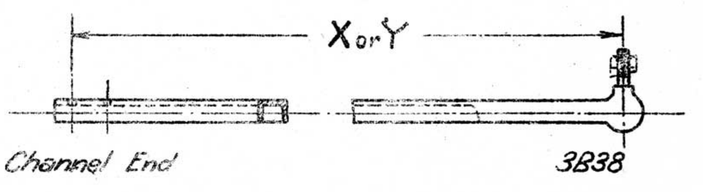

6-7-23 **11A337**

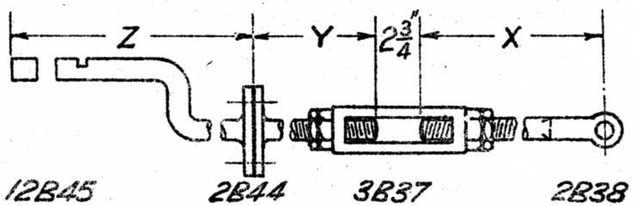

6-7-23 previously 7H122 **4A337**

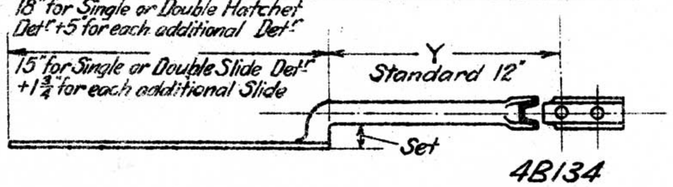

Blade 1¼" x 5/16" : Set = ¾" 14A337
" 2" x 5/16" " = 1½" 13A337
" 2" x 5/16" " = ½" 8A337

6-7-23

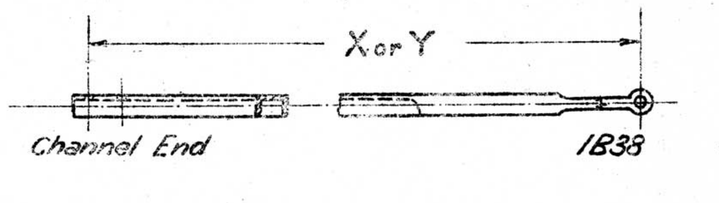

6-7-23 **12A337**

10-4-30.
Part No 17A337 added.
W.S.C.

Note:-
Part Nos 13A337 14A337, 15A337 & 16A337 added
G.M.S.

VICTORIAN RAILWAYS
DETECTOR RODS
for Point Layouts
1¼" & ¾" Composite
6-7-23

Chief Eng.r of Sigs & Tels.

Drawn by R.G.C.

Traced by R.G.C.

A337

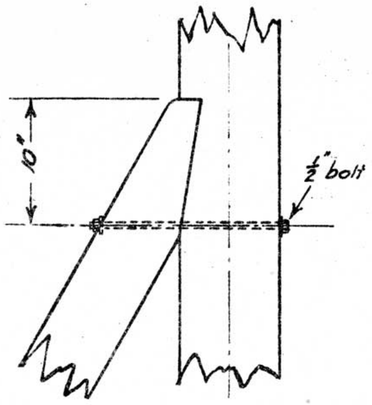

Strut

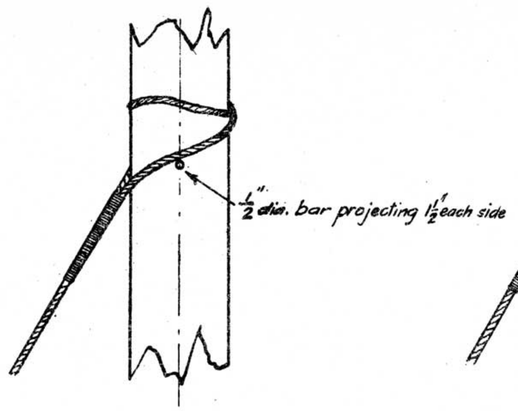

Stay

Round Timber Poles

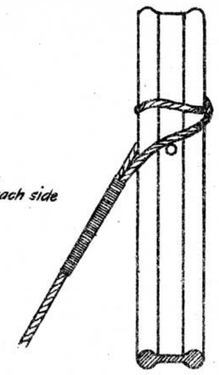

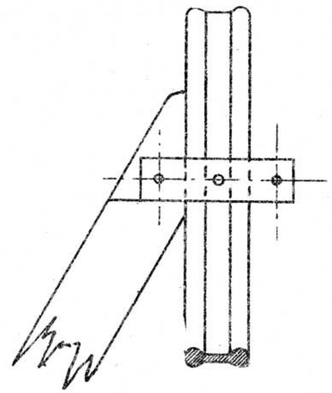

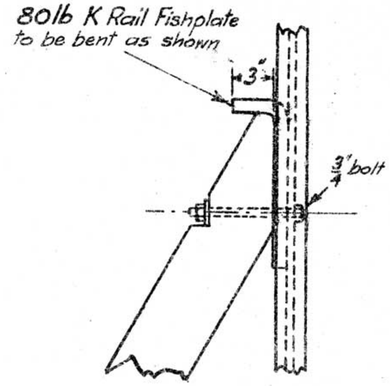

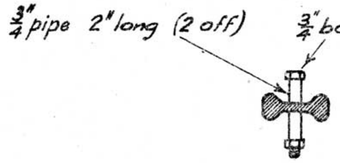

Stay

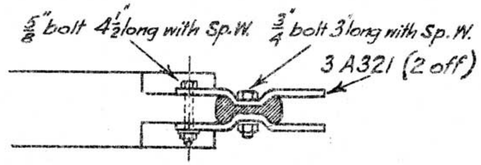

Side Strut
Rail Poles (see drg. A321)

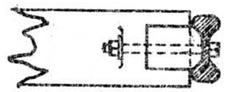

Parallel Strut

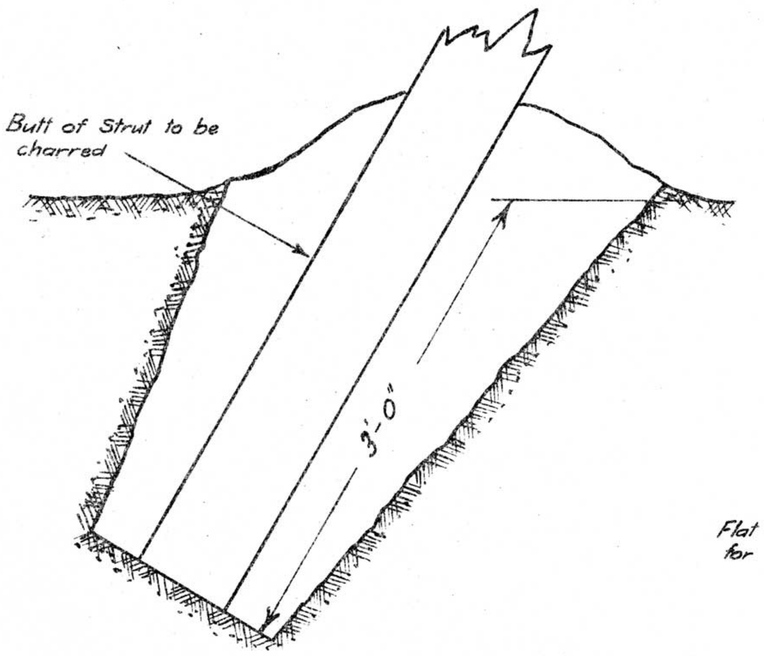

Strut Base

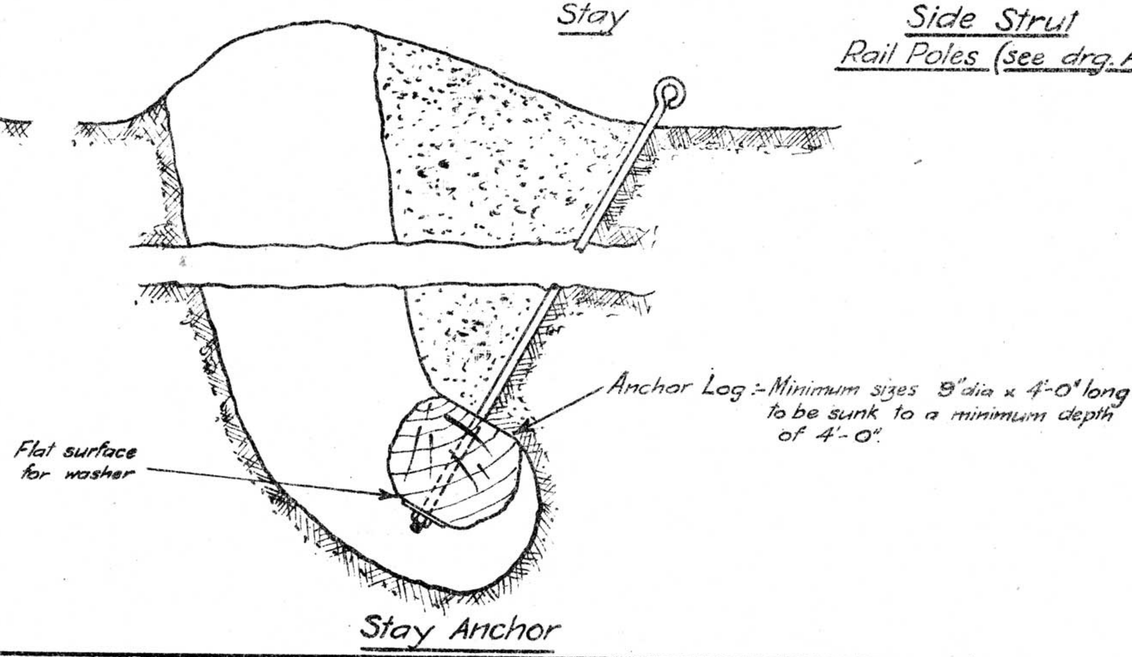

Stay Anchor

VICTORIAN RAILWAYS

TELEGRAPH POLES

STRUTS & STAYS

DETAILS

15-6-23

Chief Engr of Sigs. & Tels.	Drawn by	Traced by
	S.C.O.	S.C.O.

A338

L.62/27

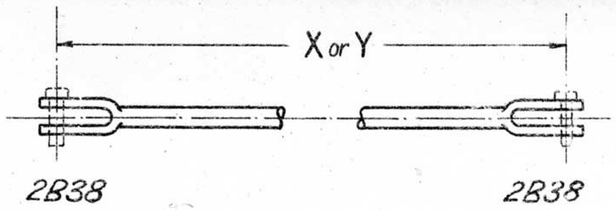

25-6-23 1A339

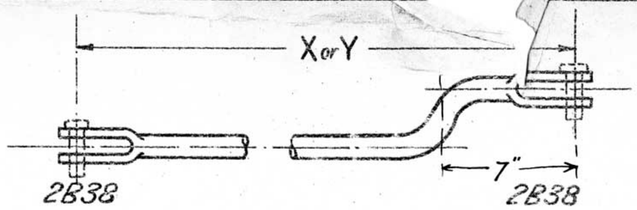

Standard Sets 1½" & 3" & 4"

C.B.Y./11-2-44.

25-6-23 5A339

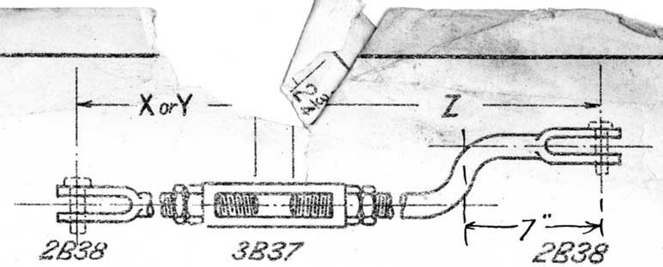

Standard Sets 1½ & 3"

25-6-23 9A339

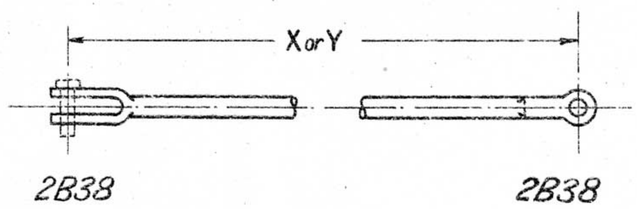

25-6-23 2A339

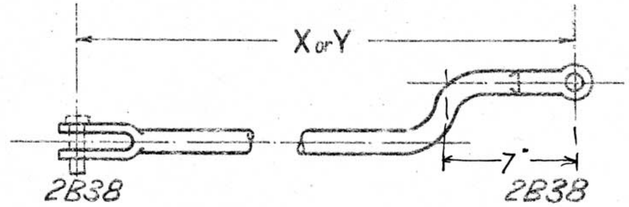

Standard Sets 1½" & 3"

25-6-23 6A339

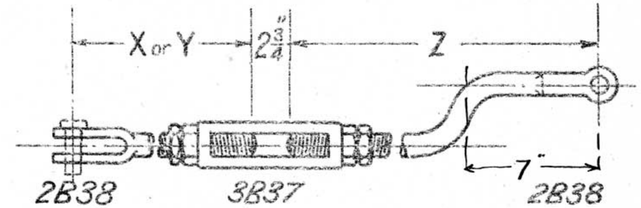

Standard Sets 1½" & 3"

25-6-23 10A339

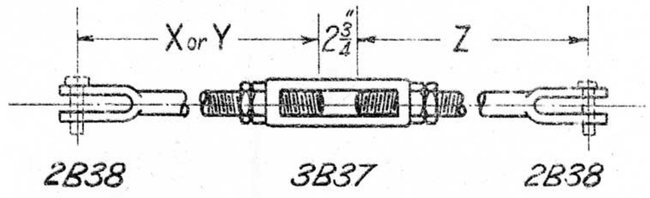

25-6-23 3A339

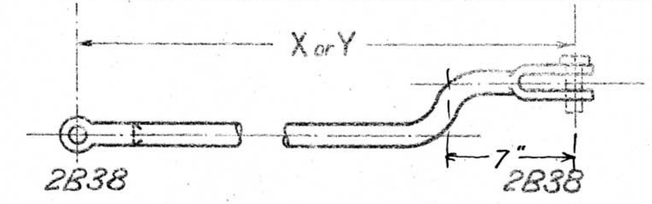

Standard Sets 1½" & 3"

25-6-23 7A339

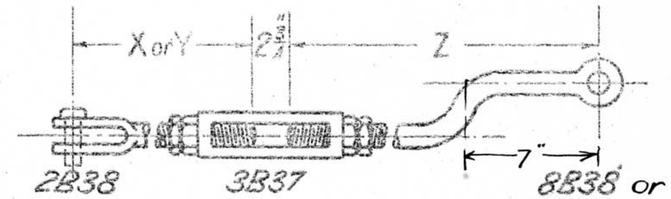

Standard Sets 1½" & 3"

25-6-23 11A339

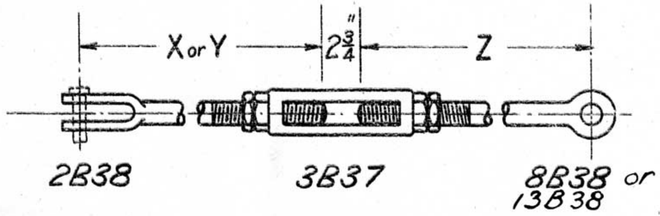

25-6-23 4A339

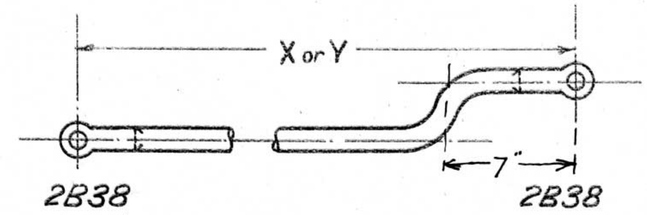

Standard Sets 1½" & 3"

25-6-23 8A339

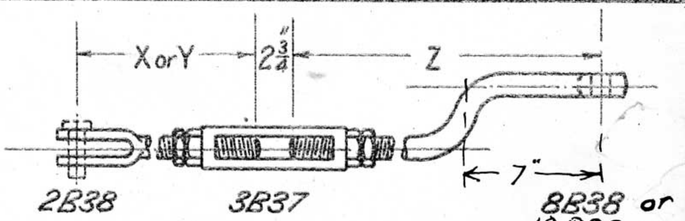

Standard Sets 1½", 2" & 3"

25-6-23 12A339

L.280/23

NOTE
Amount of set to be stated. Long Jaw 2H186 or Wide Jaw 3H186 will be supplied, if specified, stating at which end required.

VICTORIAN RAILWAYS

1¼" dia. CONNECTING RODS

EYE & JAW ENDS

25-6-23

Chief Engr of Sigs & Tels.	Drawn by R.G.C.	Traced R.G.C.
	W.R.	

A339

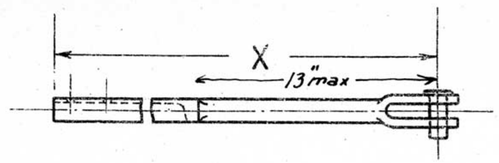

CHANNEL END 2B38

21-6-23 1A340

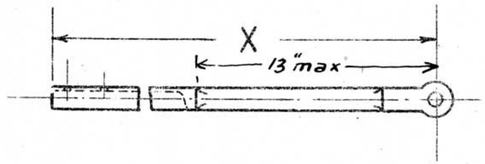

CHANNEL END 2B38 ~~or~~ ~~13B38~~

21-6-23 2A340

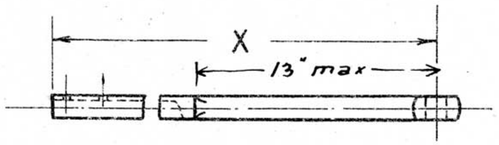

CHANNEL END 8B38 or 13B38

2-6-23 3A340

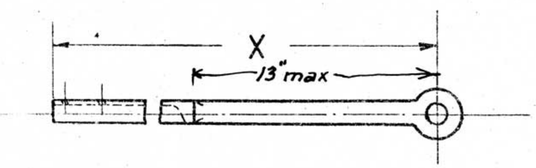

CHANNEL END 8B38 or 13B38

21-6-23 4A340

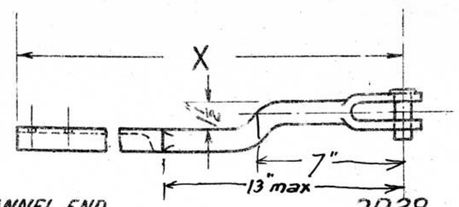

CHANNEL END 2B38

21-6-23 5A340

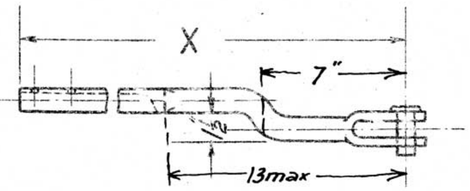

CHANNEL END 2B38

21-6-23 6A340

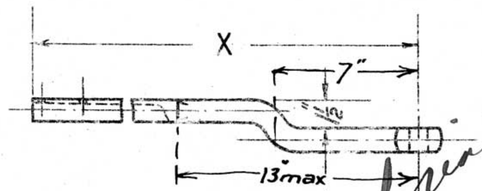

CHANNEL END 8B38 or 13B38

21-6-23 7A340

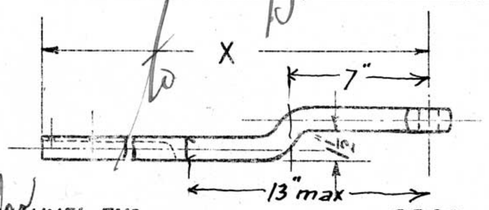

CHANNEL END 8B38 or 13B38.

21-6-23 8A340

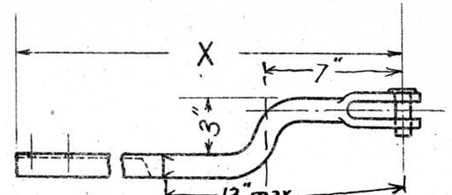

CHANNEL END 2B38

21-6-23 9A340

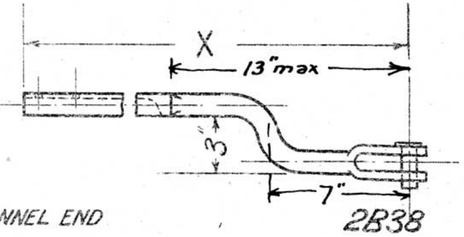

CHANNEL END 2B38

21-6-23 10A340

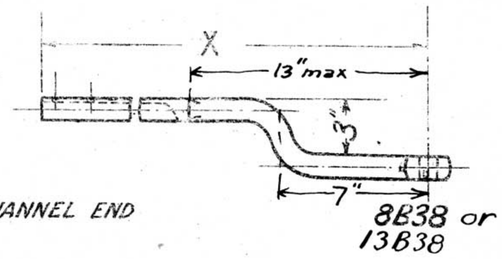

CHANNEL END 8B38 or 13B38

21-6-23 11A340

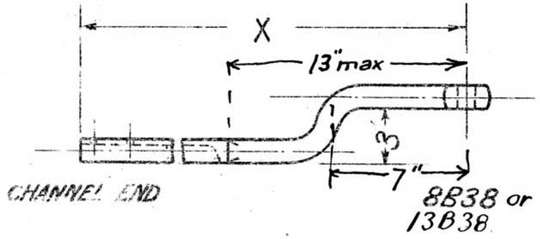

CHANNEL END 8B38 or 13B38

21-6-23 12A340

Refer to B. Sheprint

Refer to B. Sheprint

L.280/23

Special Note

Stock lengths of "X" = 5'-0" to 6'-0"

NOTE 1" Jaw 1F1792
Long Jaw 2H186 or Wide Jaw 3H186 will be supplied if specified.

VICTORIAN RAILWAYS
CHANNEL CONNECTING RODS
EYE & JAW ENDS

21-6-23

Chief Engr of Sigs & Tels.	Drawn by R.G.C.	Traced by R.G.C.
[signature]	W.P. [signature]	

A340

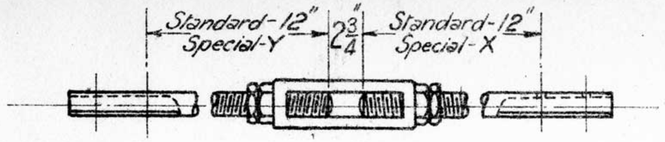

For Gate Stop Operation Y = 14½", X = 2'-2½"

24-7-23 1A345

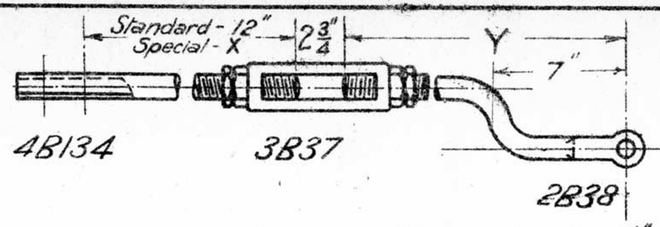

Standard Sets - 1½" & 3"

24-7-23 5A345

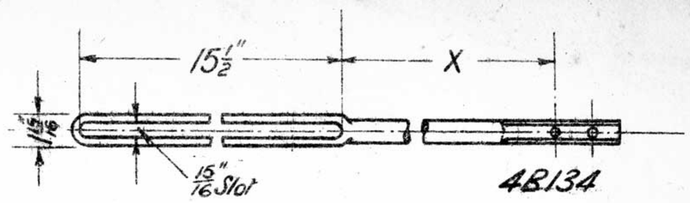

Standard X = 18"

24-7-23 9A345

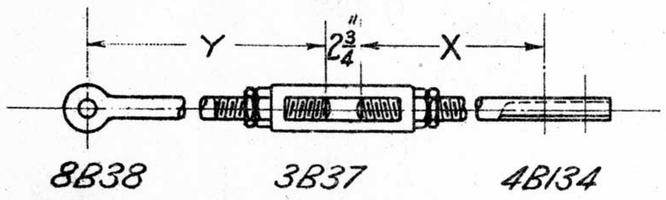

Lockbar Length Y = 16" X = 19½"
Point Length Y = 5'-0" X = 12"
Y = 5'-0" X = 2'-8½" for Compound

24-7-23 2A345

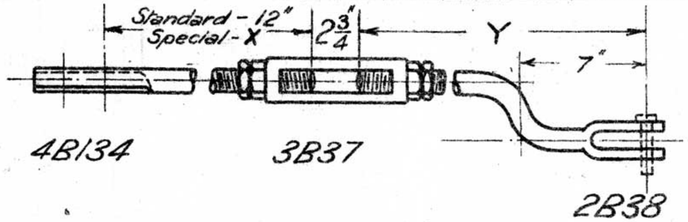

Standard Sets - 1½" & 3"

24-7-23 6A345

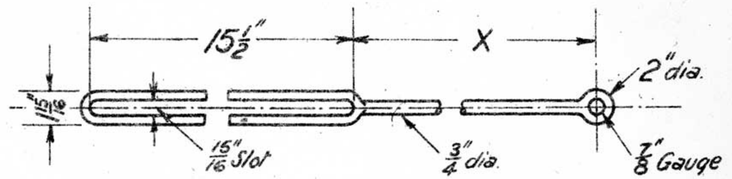

Standard X = 12"

24-7-23 10A345

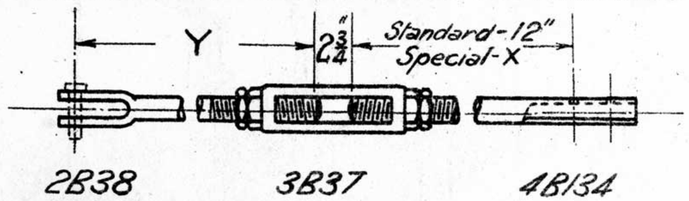

24-7-23 3A345

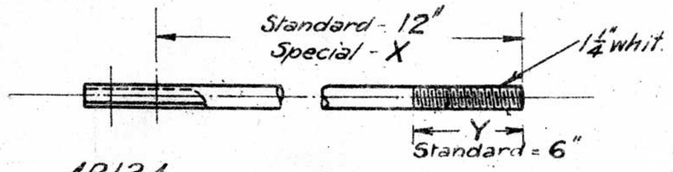

Y = 1¼" R.H. whit. Thread 14A345
R.H Whit " 13A345
L.H " " 7A345

24-7-23

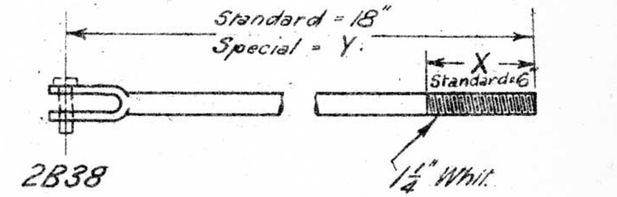

X = 1¼" R.H.whit. Thread 16A345
R.H.Whit. " 15A345
L.H. " " 11A345

24-7-23

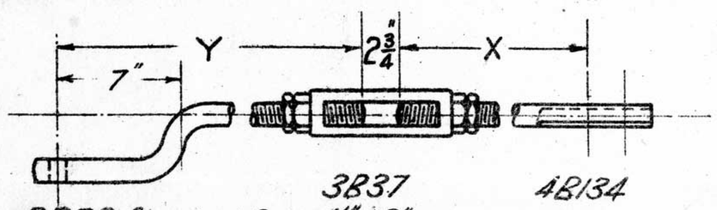

8B38 Standard Sets - 1½" & 3"
Plunger Length - X = 2'-4" Y = 13½" Set = 2"

24-7-23 4A345

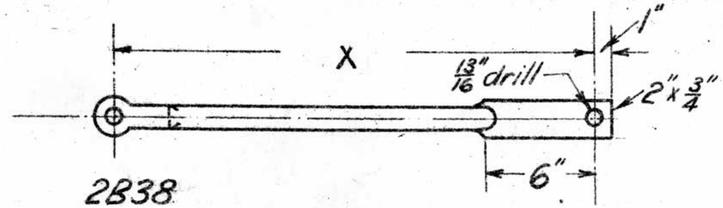

previously 15H122

24-7-23 8A345

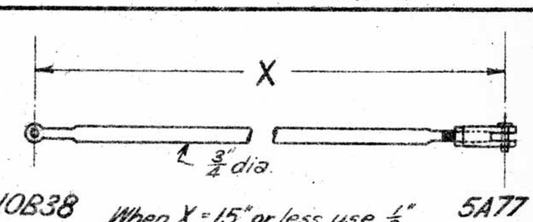

When X = 15" or less use ½" rod throughout. 5A77

previously 2B171 & 4A10

24-7-23 12A345

26-1-26
Parts No
13A345
14A345
15A345 &
16A345
added
S.C.O.

NOTE
Long Jaw 2H186 — Wide Jaw 3H186 or other Special Jaws will be supplied if specified, stating at which end required.

VICTORIAN RAILWAYS
CONNECTING RODS
EYE, JAW, & FISHPLATE ENDS
24-7-23

Chief Eng. of Sigs. & Tels.	Drawn by	Traced by
	R.G.C.	R.G.C.

A345

4072-23

Stores
Section —
Item No —

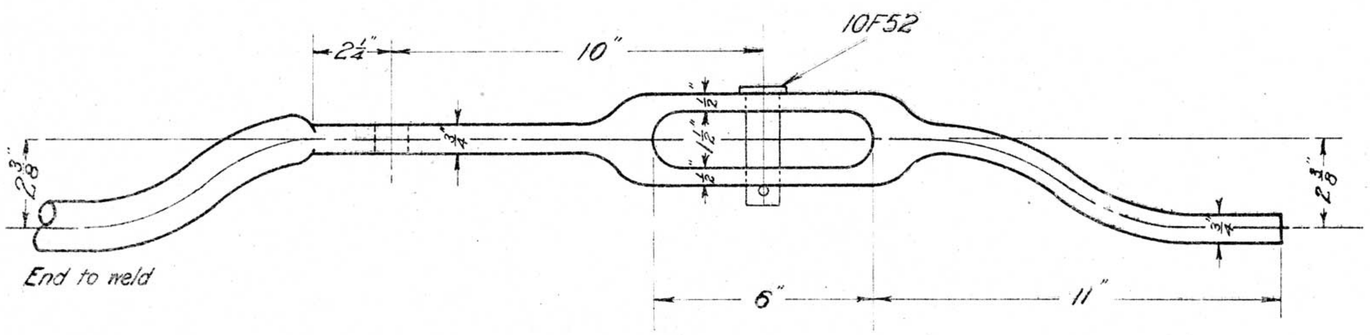

1A352

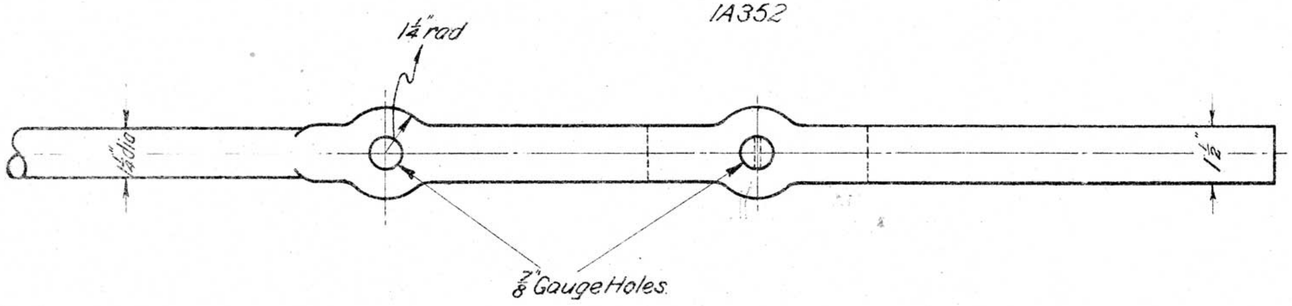

M.S.
SELECTOR BAR

28·8·23

Channel End 2A352
End to weld 1A352

Stores
Section —
Item No —

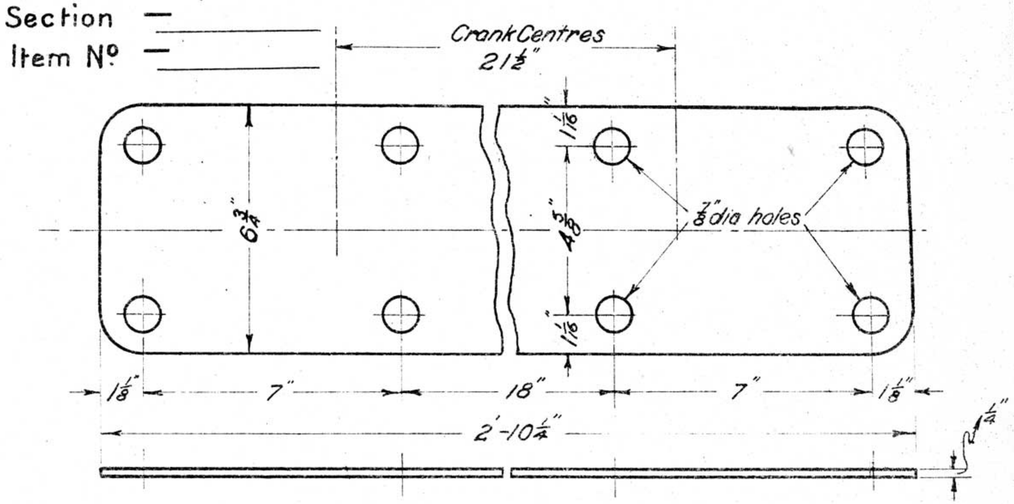

M.S.
CRANK BASE

28·8·23

3A352

Stores
Section —
Item No —

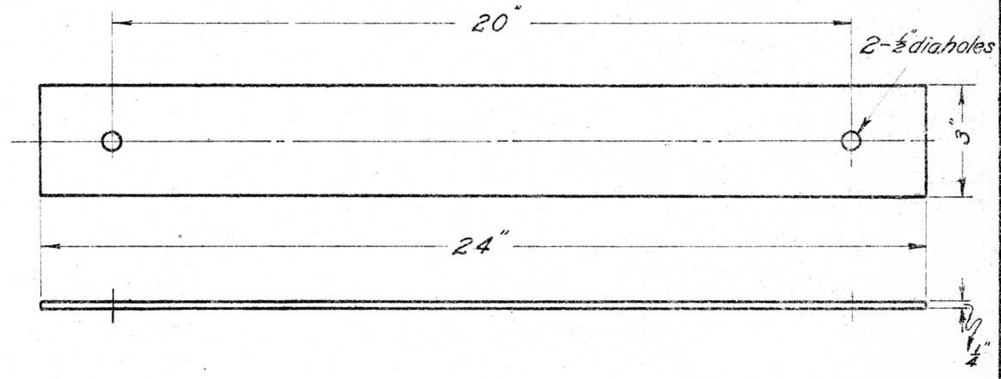

M.S.
BEARING PLATE

28·8·23

4A352

For selective lockbar layout see Drg. N13

VICTORIAN RAILWAYS.

SELECTIVE LOCK BAR. DETAILS.

28·8·23

Chief Eng'r of Sigs & Telegs	Drawn by	Traced by
	G.W.S.	G.W.S.

A352

L.298/23

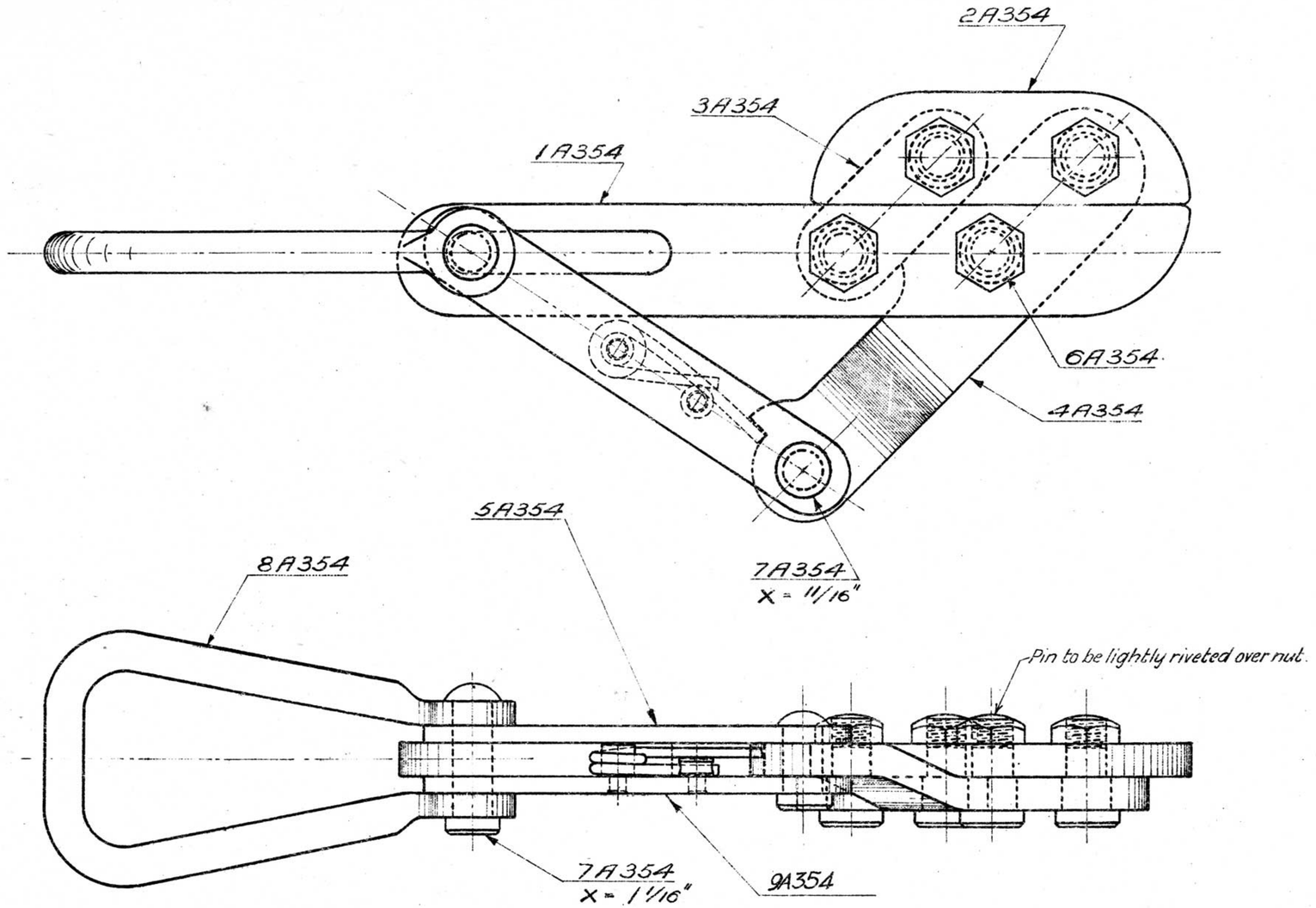

Come-Along complete — 1A355

N°	NAME	MAT	Q'NTY
1A354	Bottom Jaw	Spg St. (Annealled)	1
2A354	Top "	" "	1
3A354	Connecting Plate	" "	1
4A354	Arm	" "	1
5A354	Link	M. S.	1
6A354	Pin	Spg St Annealled	4
7A354	" X = 1 1/16"	M. S.	1
7A354	" X = 11/16"	" "	1
8A354	Shackle	" "	1
9A354	Link	" "	1
	Spring N°12 Gauge (as shewn)	Spg St.	1

Note :- Clamp to be tested with a 700lb pull (dead weight) & back of plate (1A354) stamped. "Tested 700lbs."

21-9-23

1A355

	21-7-26	14-12-25	13-10-25	1-7-24	12-3-24	VICTORIAN RAILWAYS	Chief Eng" of Sig" & Teleg"	Drawn by	Traced by
	Alteration N°146 E.C.M.	Alteration N°129 L.V.R.	Alteration N°119 K.C.H.C.	Alteration N°75	Alteration N°68 & Note re Test added. K.C.H.C.	COME-ALONG Wire Clamp — Type "B" Assembly 21-9-23		C.E.W	C.E.W

A355

L 79/27

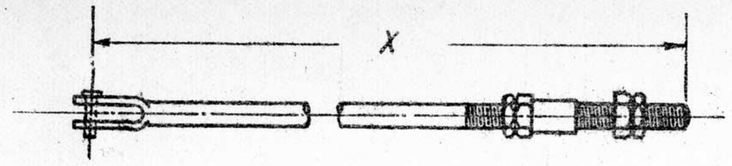

10-12-23 1A361

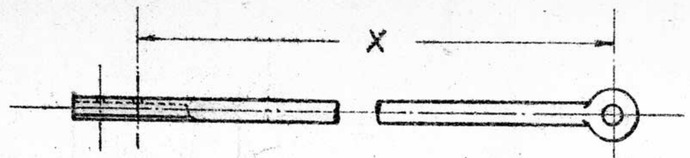

For Gate Stop Operation X = 14½"

10-12-23 5A361

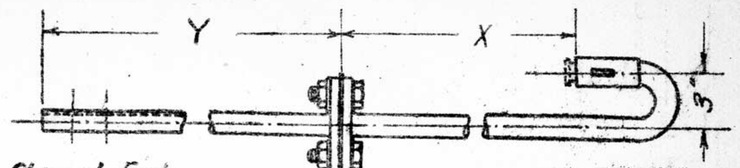

Insulated Joint in Horizontal Plane order 13A361

10-12-23 " " " Vertical Plane as shewn " 12A361

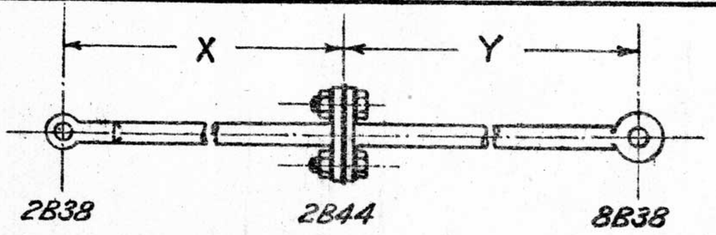

Insulated Joint in Vertical Plane order 6A361

10-12-23 " " " Horizontal " as shewn " 2A361

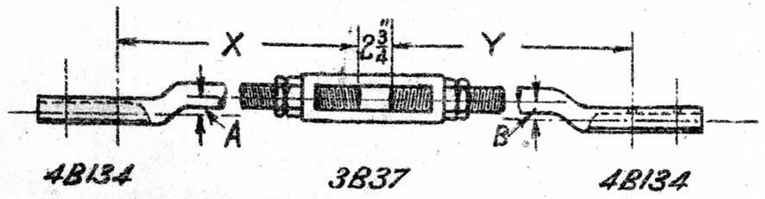

For Gate Stop Operation X = 2'-2½", Y = 14½"
Standard Set = 1"

10-12-23 7A361

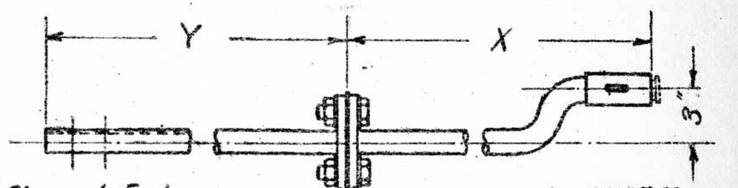

Insulated Joint in Horizontal Plane order 15A361

10-12-23 " " " Vertical Plane as shewn " 14A361

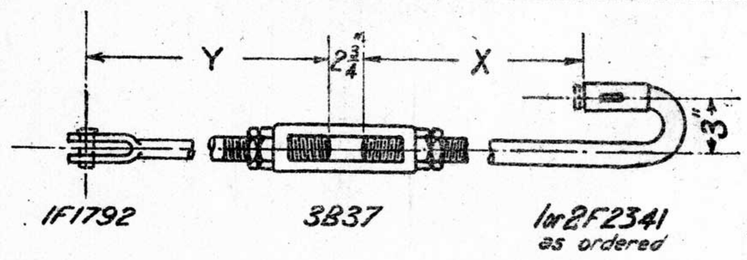

10-12-23 3A361

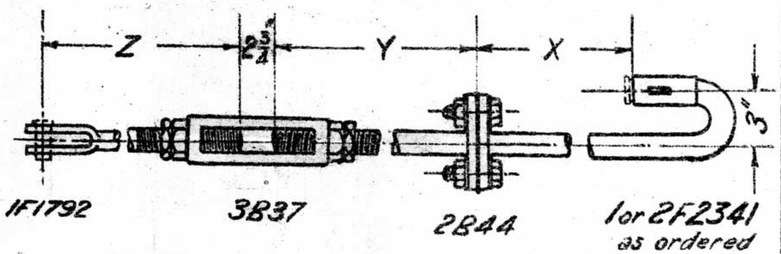

Insulated Joint in Horizontal Plane order 9A361

10-12-23 " " " Vertical Plane as shewn " 8A361

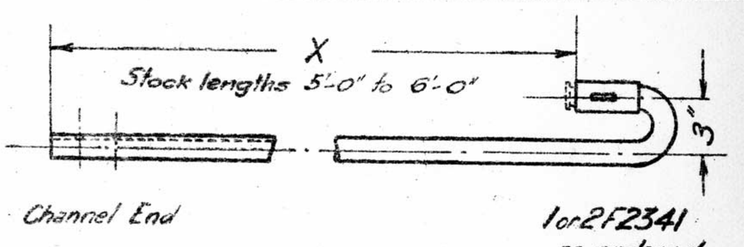

10-12-23 16A361

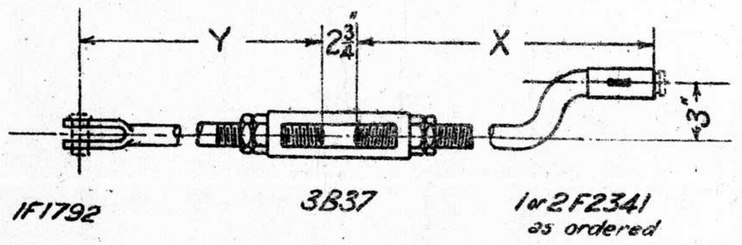

10-12-23 4A361

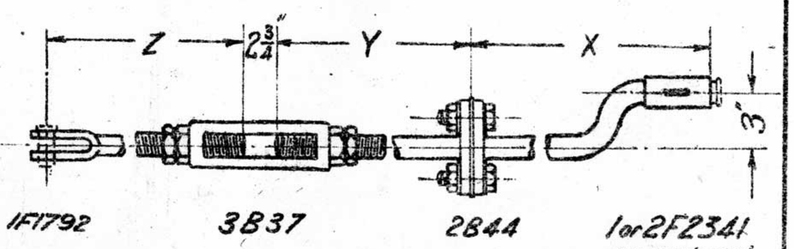

Insulated Joint in Horizontal Plane order 11A361

10-12-23 " " " Vertical Plane as shewn " 10A361.

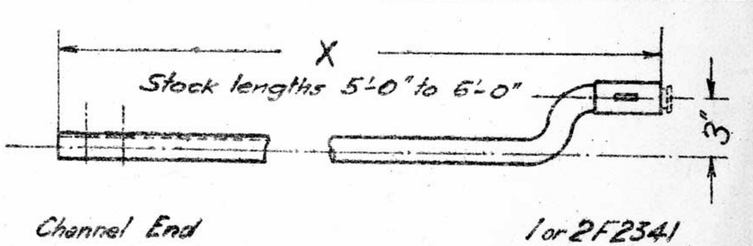

10-12-23 17A361

VICTORIAN RAILWAYS

1¼" dia. CONNECTING RODS

MISCELLANEOUS

10-12-23

Chief Engr of Sigs & Tels.	Drawn by R.G.C.	Traced by R.G.C.

A361

5702-23

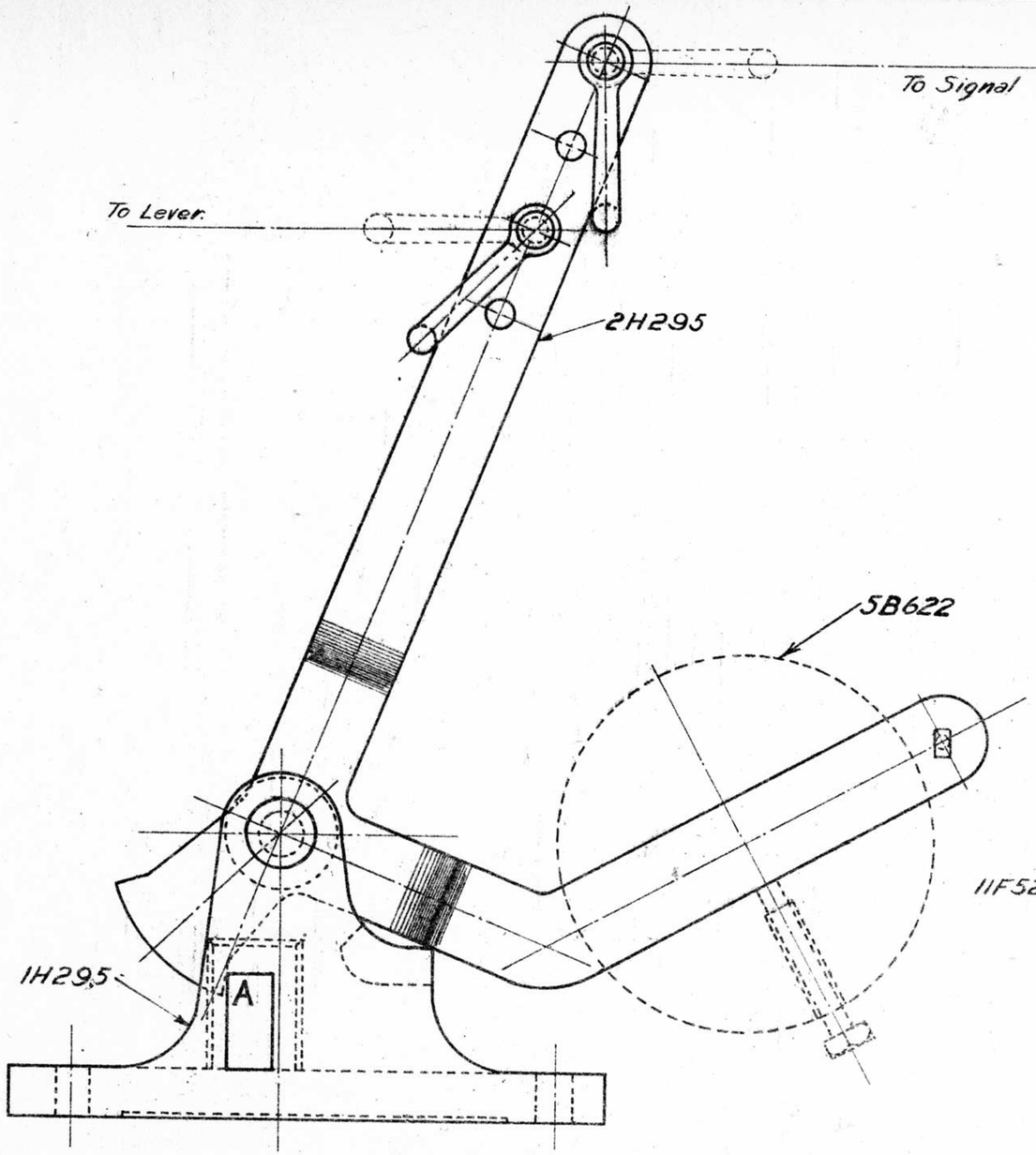

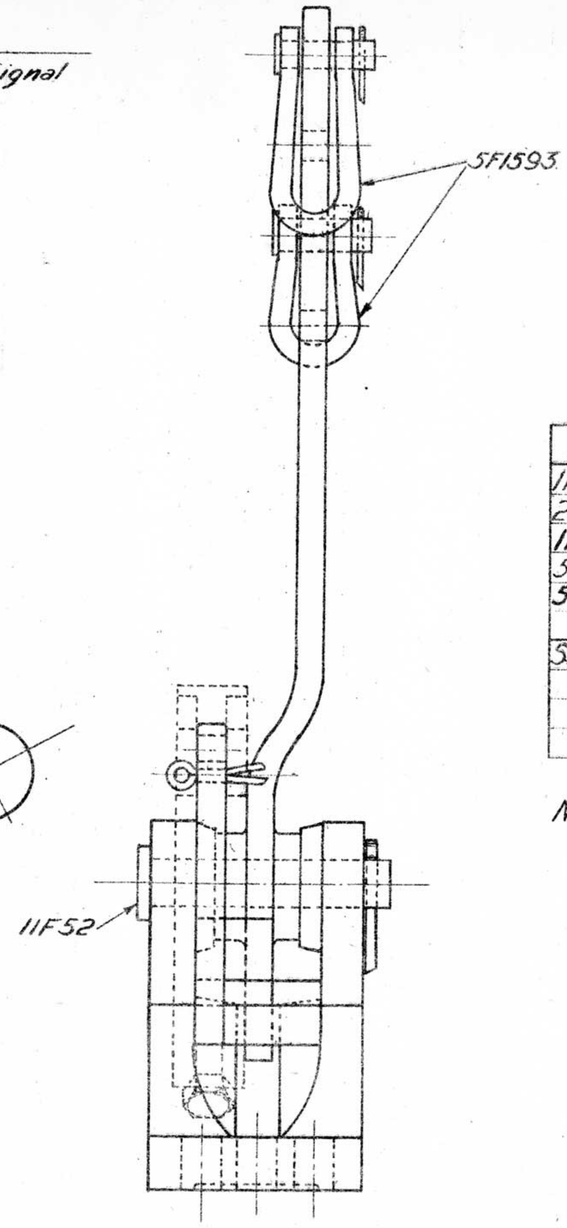

MATERIAL-LIST

No	Name	Mat'l	Q'nty
1H295	Base	C.I.	1
2H295	Hatchet	W.I.	1
11F52	Pin 4⅛" long	M.S.	1
5F1593	Shackle	"	2
5B622	Weight (when specified only)	C.I.	1
Stock	Cotter Pin ¼" x 2" long	–	1
"	Coach Screws ¾" x 5" long	–	3

NOTE:-If weight is required specify when ordering

Clearance at "A" between hatchet and first slide MUST NOT exceed $\frac{5}{32}$".

For 3 Blades (as shown) order 2A368
For 2 Blades " 1A368

1-4-24

Hatchet Detector

22-1-27
Alteration No 163.
L.J.P.

VICTORIAN RAILWAYS
HATCHET DETECTOR
ASSEMBLY
1-4-24

Chief Engr Sigs & Tels	Drawn by	Traced by
	L.J.P.	L.J.P.

A368

1341.24

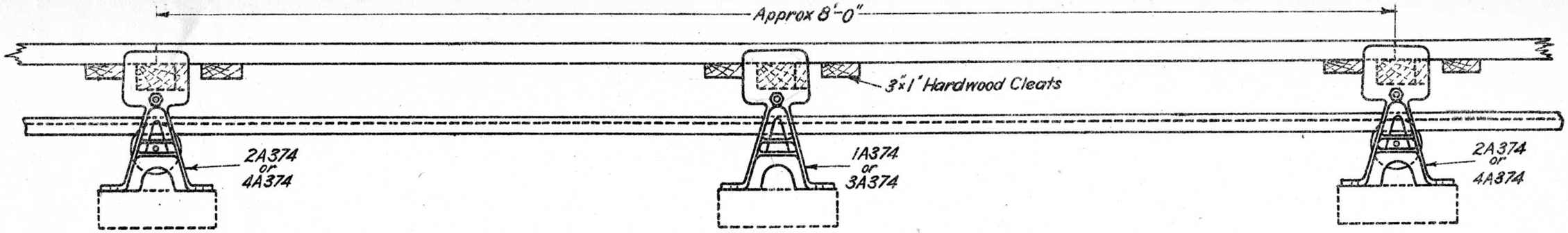

SIDE ELEVATION

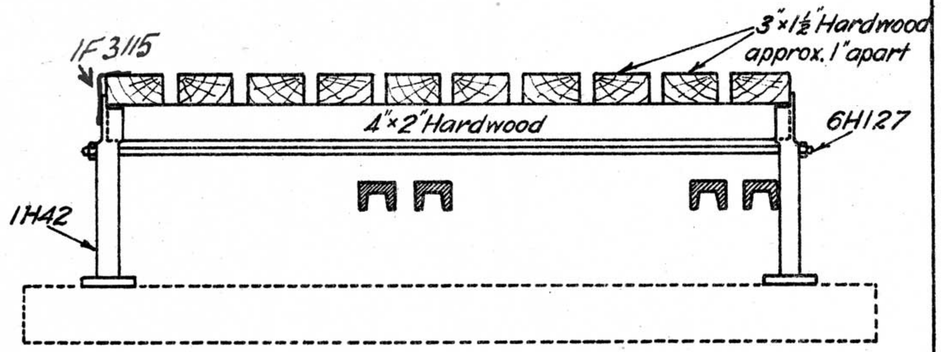

4·6·24 INTERMEDIATE SUPPORT 1A374

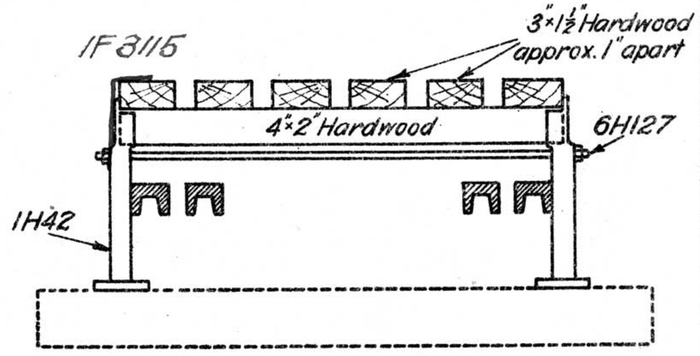

4·6·24 INTERMEDIATE SUPPORT 3A374

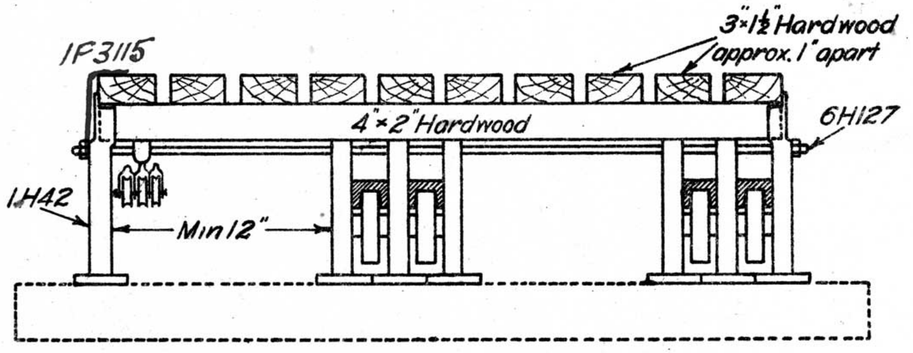

4·6·24 SUPPORT FOR SIGNAL WIRES & POINT LEADS 2A374

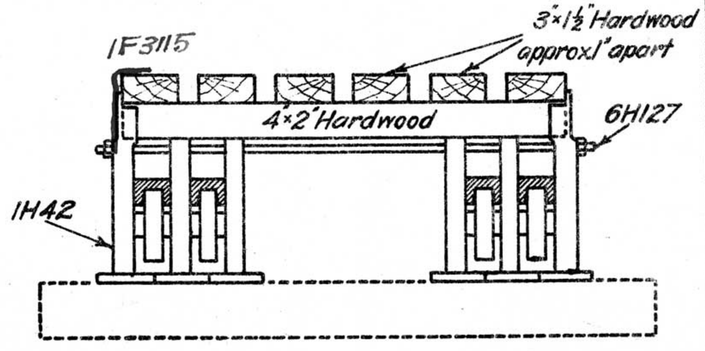

4·6·24 SUPPORT FOR POINT LEADS ONLY 4A374

Particulars for ordering material

R = No of rod spaces.
In types 1A374 & 2A374 a minimum space of 12" is allowed for a maximum of 12 signal wires. For every 3" increase in this space, the number in front of R must be increased by 1.

Timber per 100 feet run of covering

N° of running feet of 4"×2" H'wood Bearers = 7R+30 in types 1 & 2A374
" " " " " 4"×2" " " = 6R+10 " " 3 & 4A374
Total no. of running feet of 3"×1" Cleats = Total no. of running feet of 4"×2" Bearers × 2
" " " " " "3"×1½" Decking = " " " " " 4"×2" " × 4/12

Note:- These timbers to be cut to exact length on site. The formula includes an allowance made for waste. NKC 2-11-43

Two special A frames (1H42) are required for every 4ft. of run to be covered.
Length of bolt (6H127) in inches for Types 1 & 2A374 = 3R+14⅜"
" " " (6H127) " " " " 3 & 4A374 = 3R+2⅜"
One bolt (6H127) to every two Special 'A' Frames (1H42)

2171·24

Alteration		
640	1	3-11-37 Part 1F3115 Note re minimum Width of covering

VICTORIAN RAILWAYS

ARRANGEMENT OF TIMBER COVERING FOR POINT LEADS AND SIGNAL WIRES

4·6·24

Chief Engr of Sigs & Tels.	Drawn by G.W.S.	Traced by G.W.S.

A374

L.58/24

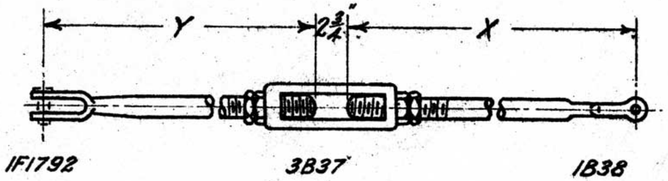

1-4-25

1A376

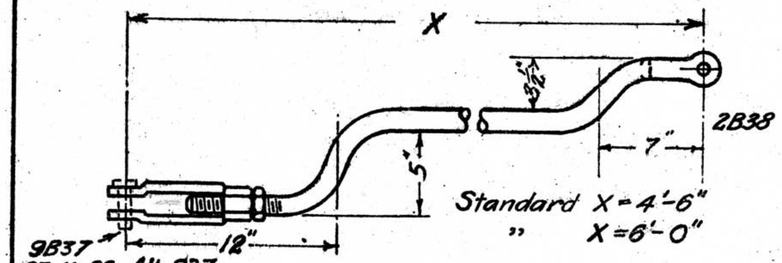

27-11-29 Alt: 237
1.4.25

5A376

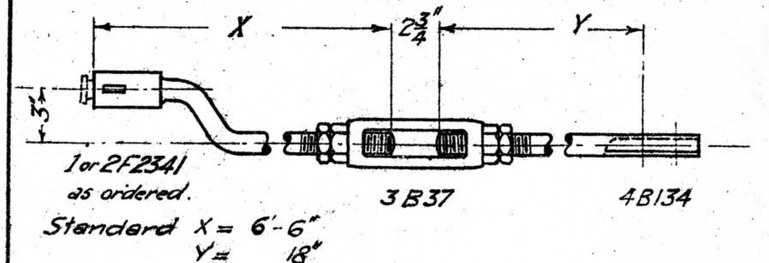

9-12-25

9A376

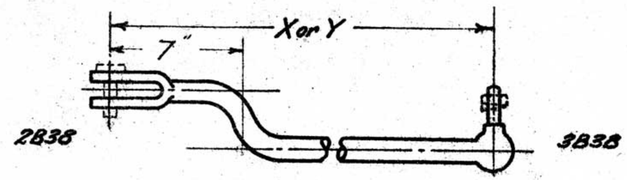

Std Y = 2'-3" Set = 3"

1-4-25

2A376

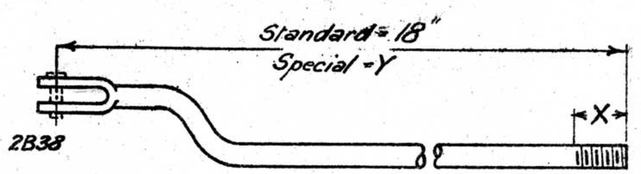

Standard Sets 3" & 1½"

X = 1¼ 1"R.H. Pipe Thread 14A376
R.H. Whit. - 13A376
L.H. " - 6A376

1.4.25

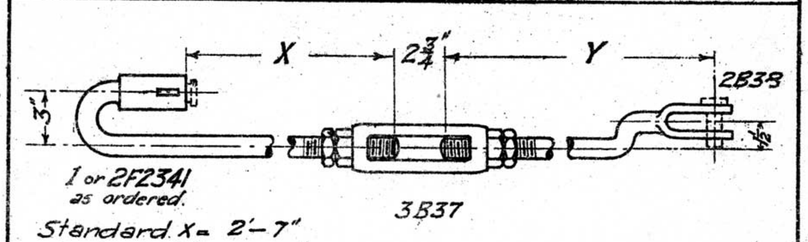

9-12-25

10A376

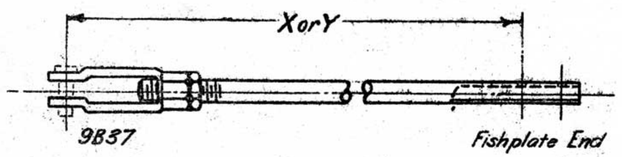

Std Y = 18"

1.4.25

3A376

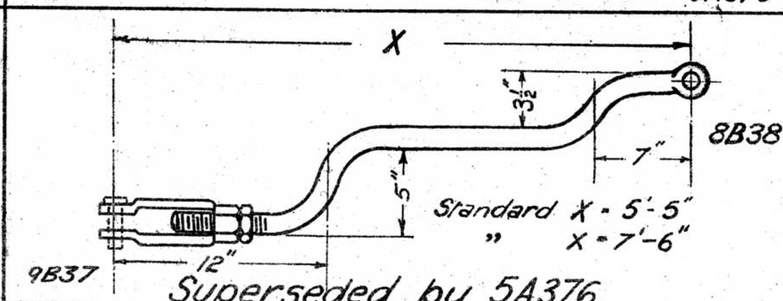

25.5.25 Superseded by 5A376.

7A376

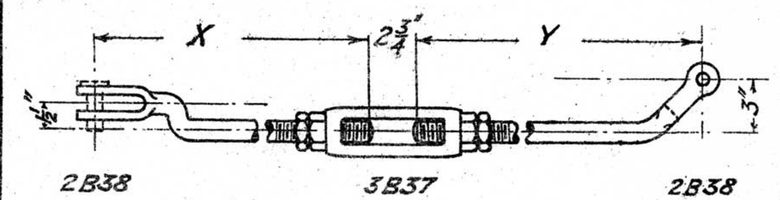

9-12-25

11A376

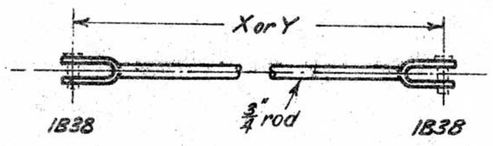

1.4.25

4A376

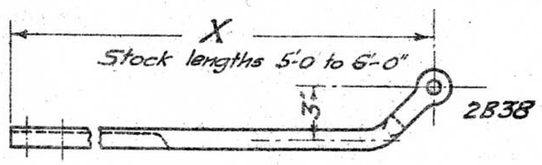

Channel End

9-12-25

8A376

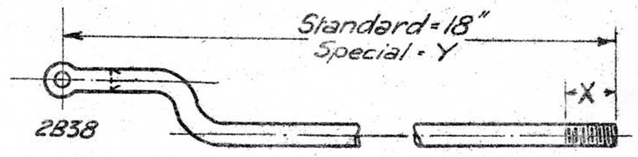

Standard Sets 3" & 1½"

X = 1¼", 1"R.H. Pipe Thread 16A376
R.H. Whit. - 15A376
L.H. Whit " 12A376

	2-2-26 Parts Nos 12A376 to 16A376 added.	9-12-25 Parts Nos 8A376 to 11A376 added	25-5-25 Part 7A376 added	VICTORIAN RAILWAYS CONNECTING RODS MISCELLANEOUS 1.4.25

Chief Engr of Sigs & Tels	Drawn by G.W.S.	Traced by G.W.S.
	Lnd.	

A376

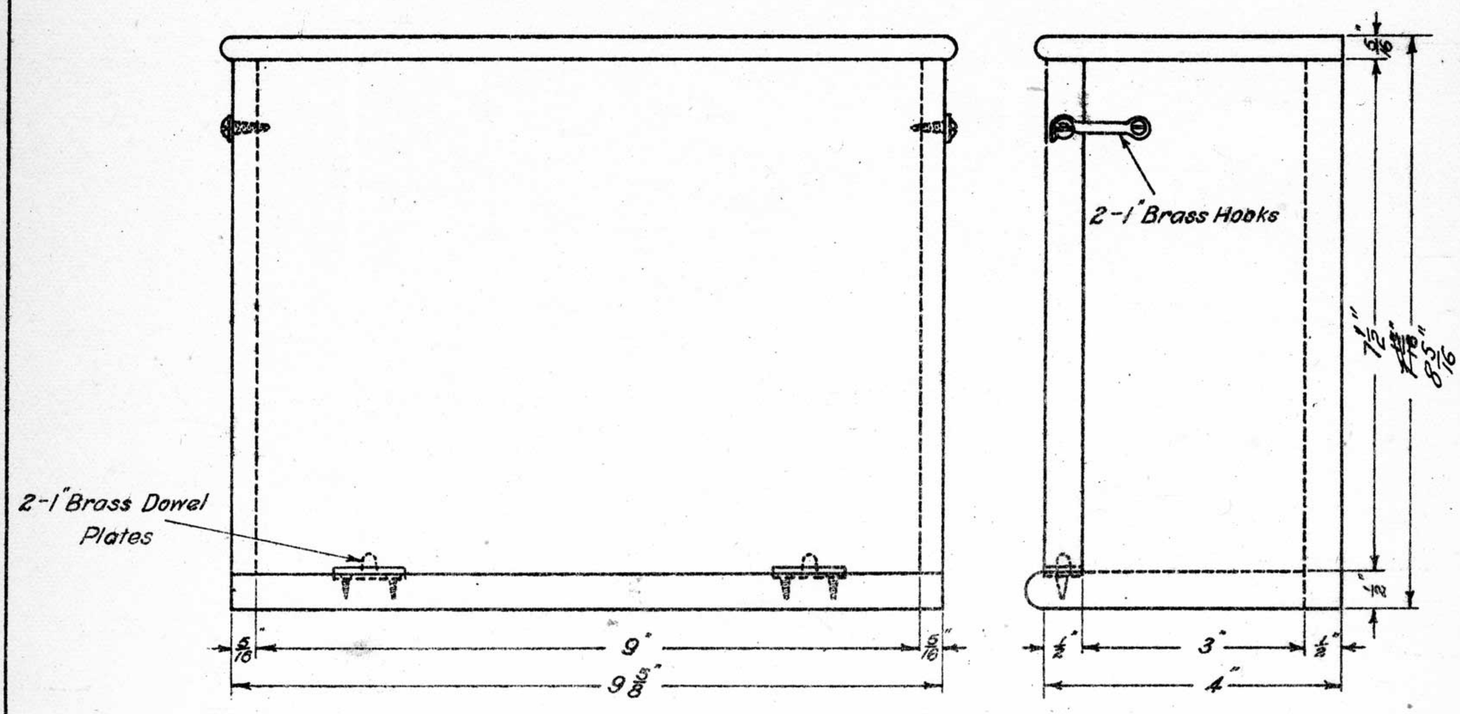

To be well glued & nailed
Hoop Pine (Stained Mahogany & Varnished)

18·7·24. BATTERY BOX (Removable Side) 1A381

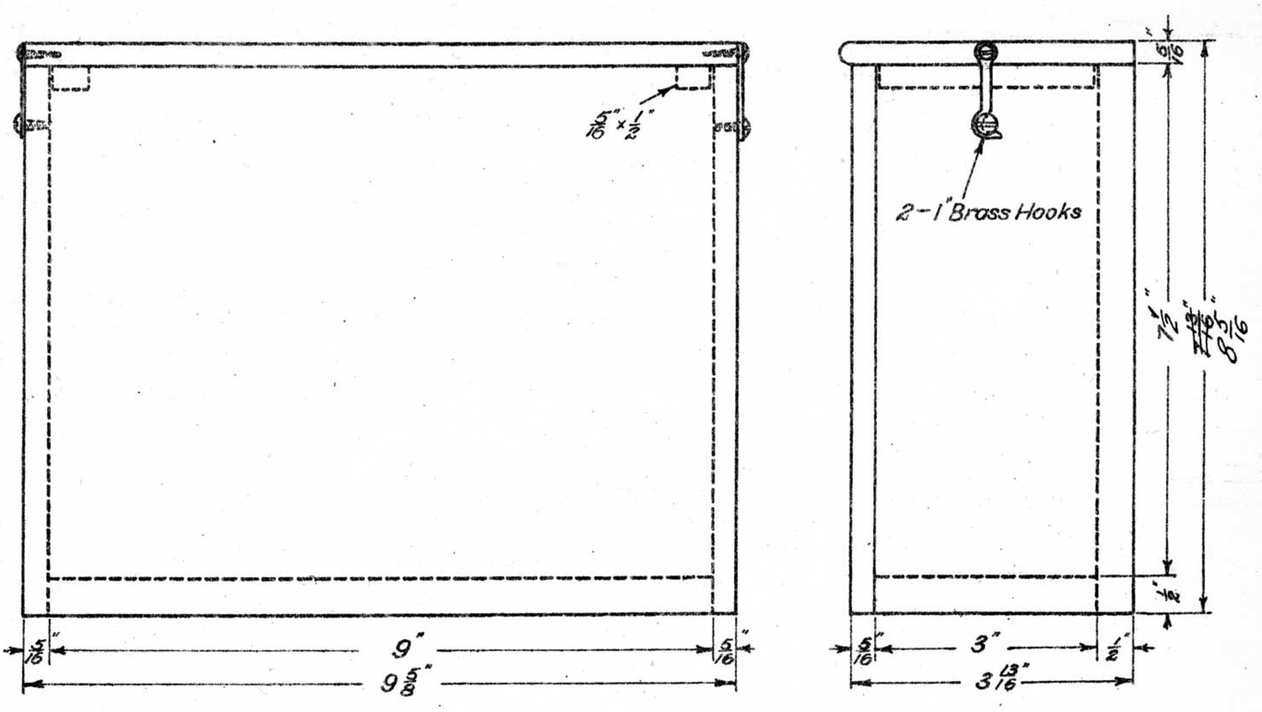

To be well glued & nailed
Hoop Pine (Stained Mahogany & Varnished)

18·7·24 BATTERY BOX (Removable Top) 2A381

A381

VICTORIAN RAILWAYS

BATTERY BOX

INDOOR TYPE

CAPACITY 3 DRY CELLS

18·7·24.

Chief Engr of Sigs & Tels	Drawn by G.W.S.	Traced by G.W.S.

A381

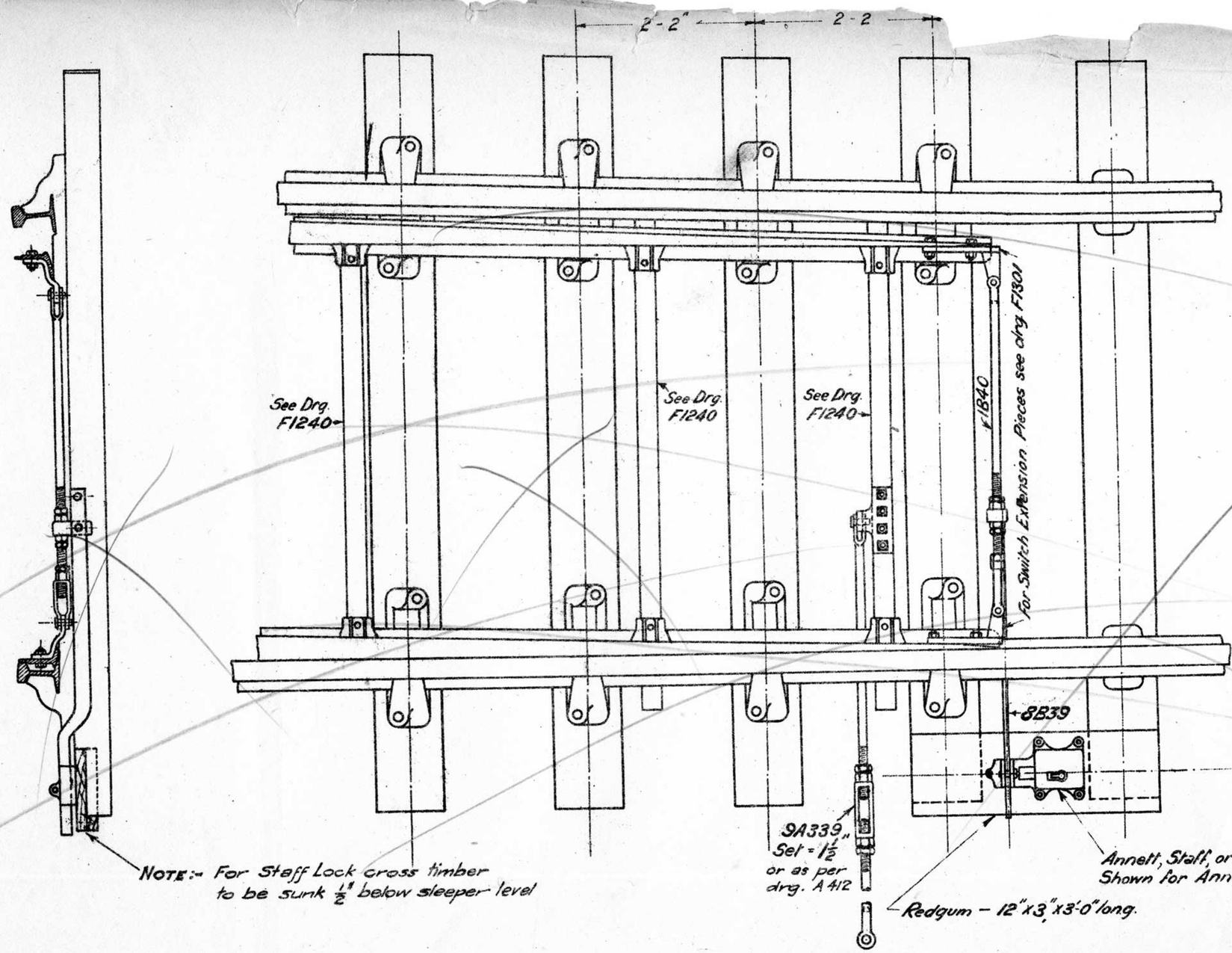

Apparatus ※	Type	Order N
Annett Lock	"A"	1H32
" "	"B"	2H32
Staff "	Ordinary	1B18
" "	Miniature	K2
Tablet "		

※ To be placed same side as the operating lever

3895.

Redrawn Leg. Blue Print

26-10-49

1 19-12-24

Part 5A340 with set = 1" superseded by 9A339 Set = 1½"

R.G.C.

VICTORIAN RAILWAYS

Pt. Layout – Class "Y"

Direct Rod Operated

Annett, Staff, or Tablet Locked

13-10-24

Chief Engr. of Sigs. & Tels.

Drawn by R.G.C.

Tra R

A386

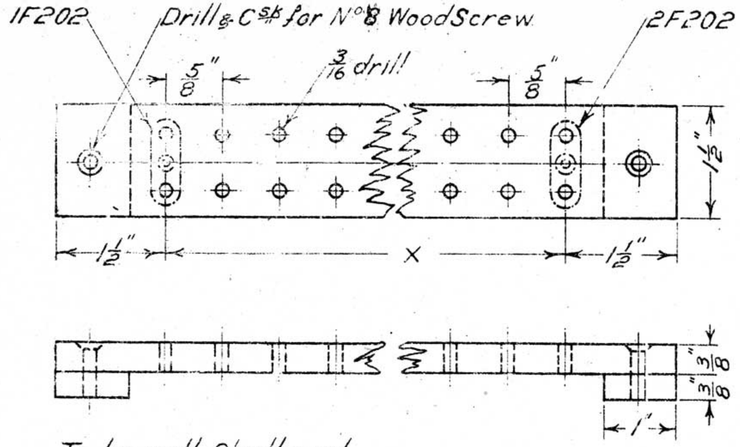

To be well Shellaced.
N° of Way to be stated when ordering.
Stock Sizes:- 2, 4, 8, 12, 15, 20, 26. Way.

5-5-25 Blackwood TERM^L STRIP — Supplied with 2F202. 2A396 " " 1F202. 1A396

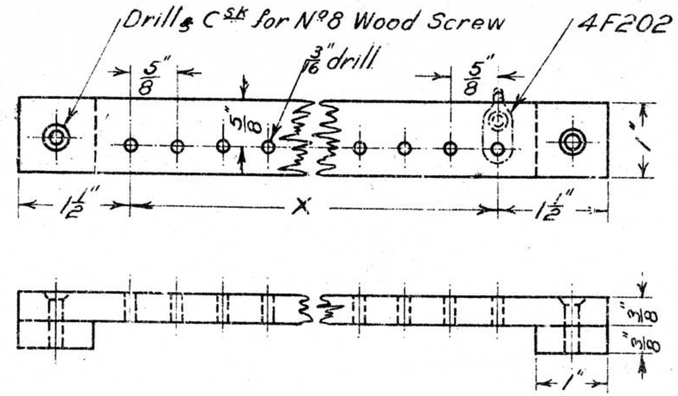

To be well Shellaced.
N° of Way to be stated when ordering.
Stock Sizes:- 8, 12, 15, 20, 26. Way.

5-5-25 Blackwood TERM^L STRIP — Supplied with 4F202. 4A396

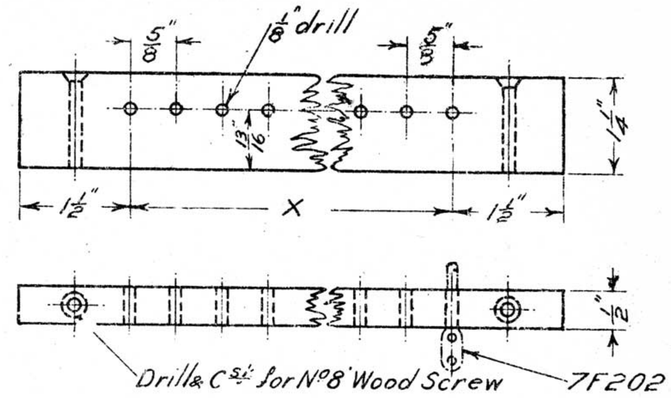

To be well Shellaced.
N° of Way to be stated when ordering.
Stock Sizes:- 15, 20, 26. Way.

5-5-25 Blackwood TERM^L STRIP — Supplied with 7F202. 6A396

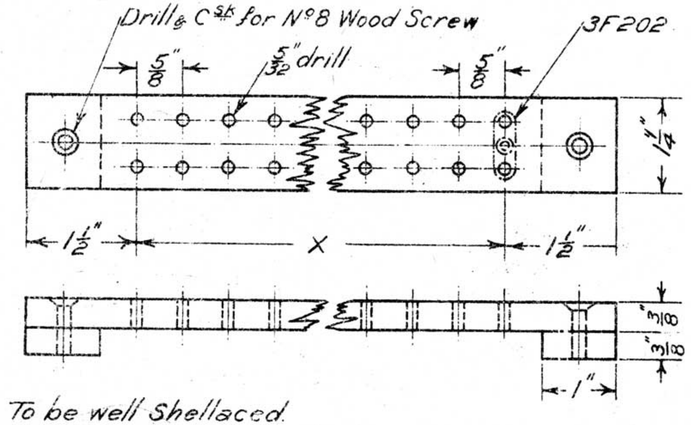

To be well Shellaced.
N° of Way to be stated when ordering
Stock Sizes:- 2, 4, 8, 12, 15, 20, 26. Way.

5-5-25 Blackwood TERM^L STRIP — Supplied with 3F202. 3A396

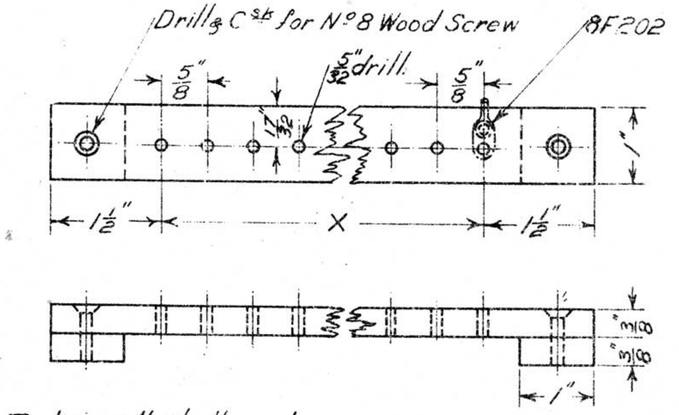

To be well Shellaced
N° of Way to be stated when ordering
Stock Sizes:- 8, 12, 15, 20, 26. Way.

5-5-25 Blackwood TERM^L STRIP — Supplied with 8F202. 5A396

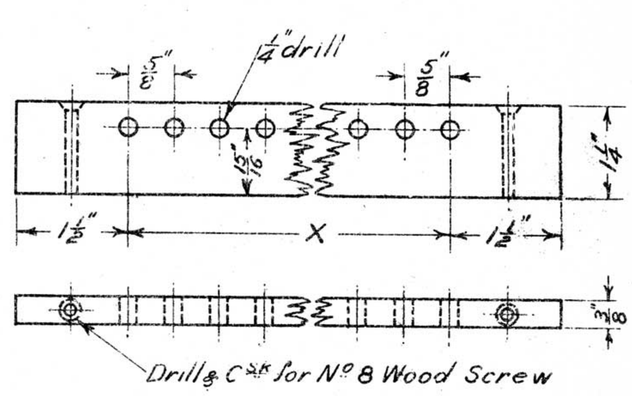

To be well Shellaced.
N° of Way to be stated when ordering
Stock Sizes:- 8, 12, 15, 20, 26. Way.

5-5-25 Soft Wood SPACING PIECE — 7A396

VICTORIAN RAILWAYS

TERMINAL STRIPS

STANDARD TYPES

5-5-25

Chief Eng of Sigs & Tels.	Drawn by	Traced by
	F.W.H.	L.J.P.

A396

L.162/27

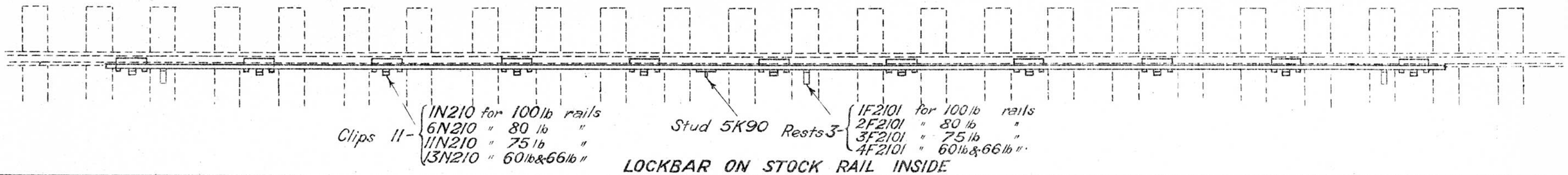

LOCKBAR ON STOCK RAIL INSIDE

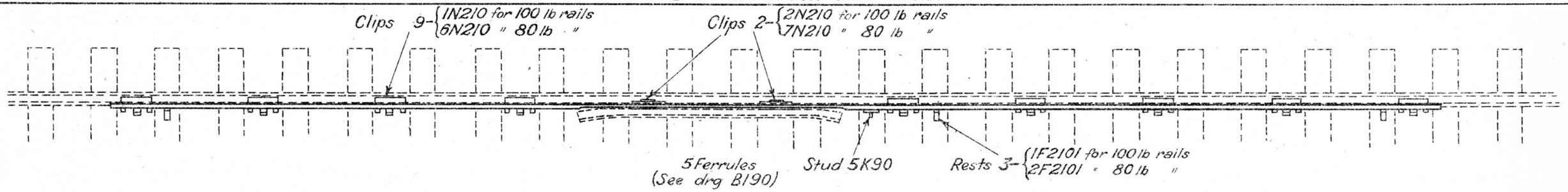

LOCKBAR ON STOCK RAIL WITH CHECK RAIL INSIDE

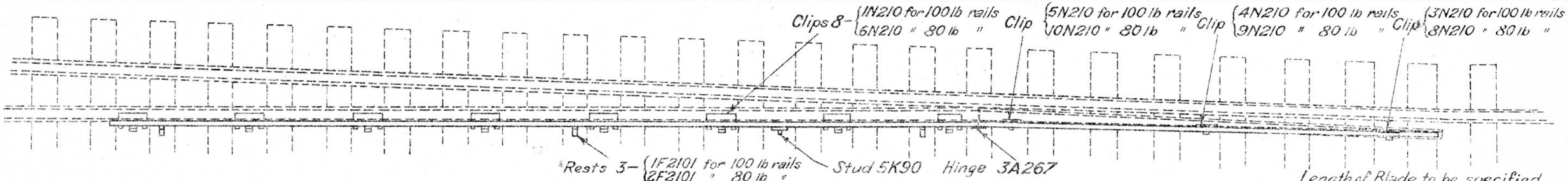

LOCKBAR INSIDE ON STOCK RAIL WITH POINT BLADE

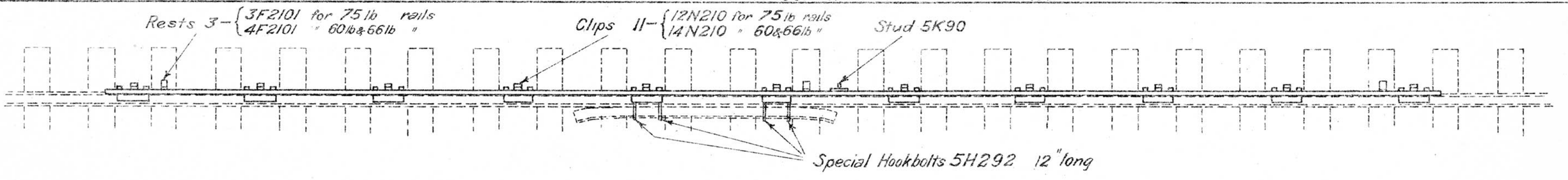

LOCKBAR OUTSIDE ON STOCK RAIL WITH CHECK RAIL

VICTORIAN RAILWAYS

LOCKBAR
DIRECT LIFT TYPE "A"
APPLICATION & ORDER NOS.

29·9·25

Chief Eng of Sigs & Tels	Drawn by G.W.S.	Traced by G.W.S.

A402

L.98/27

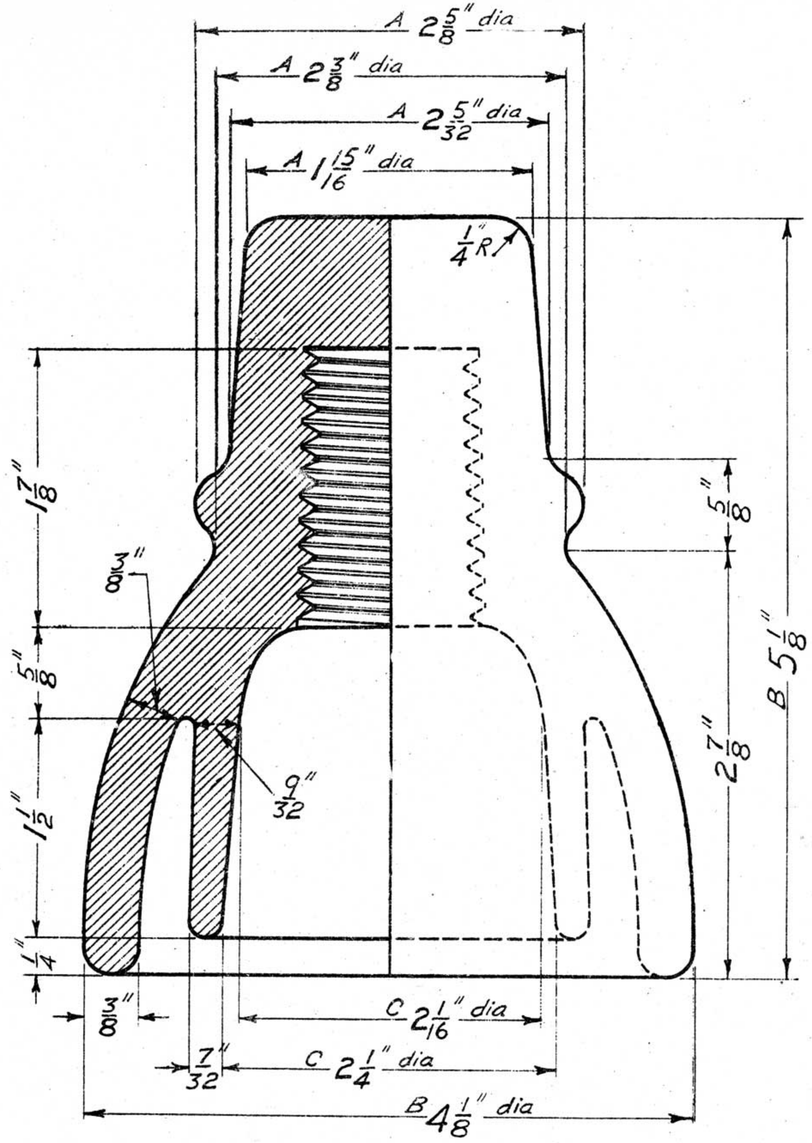

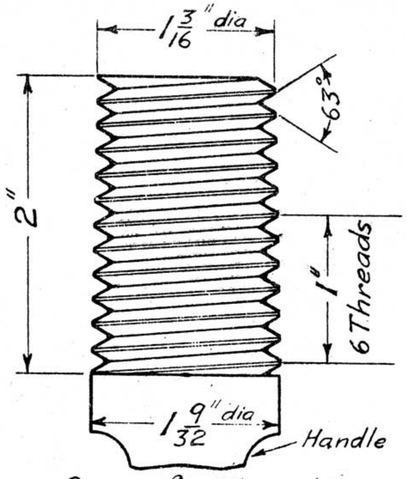

Gauge for Thread

Allowable Variations

Dimensions	under	over
A	1/16"	1/8"
B	1/8"	1/8"
C	1/8"	1/16"
others	3%	3%

Note:-
To be glazed according to Specification.
Insulator to fit standard Pin or Gauge without appreciable play or rocking.

8·9·25

PORCELAIN
INSULATOR N°1 Pattern

1A405

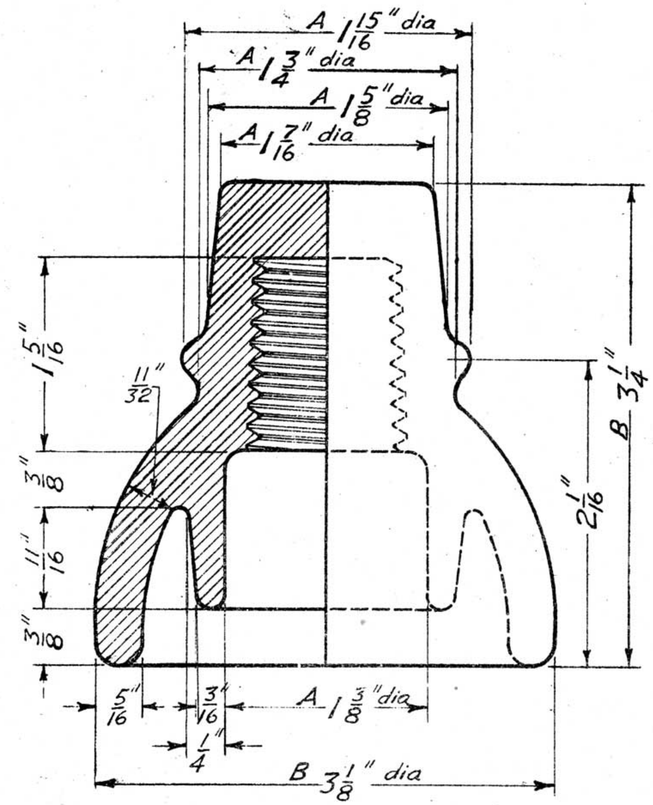

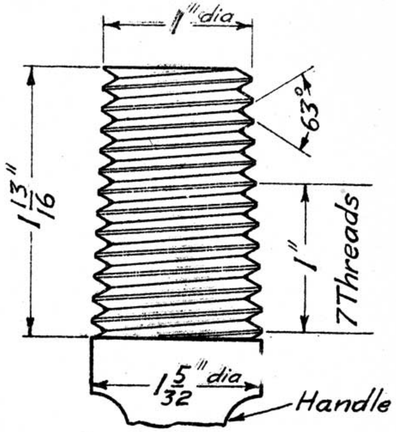

Gauge for Thread

Allowable Variations

Dimensions	under	over
A	1/16"	1/8"
B	1/8"	1/8"
others	3%	3%

Note:-
To be glazed according to Specification.
Insulator to fit standard Pin or Gauge without appreciable play or rocking.

8·9·25

PORCELAIN
INSULATOR N°2 Pattern

2A405

8·9·25
This drawing supersedes drawing N° A363.
Drawn from P.M.G. Dept. Standard drawings N°s C35A & C101A.

VICTORIAN RAILWAYS

LINE WIRE INSULATORS
Patterns 1 & 2

8·9·25

Chief Engr of Sigs & Tels	Drawn from P.M.G. Dr'g	Traced by E.A.

A405

4.62/27

11'-8"

℄ of Track.

℄ of Track.

Trip Arm.

Cover cut back 12" from end of Arm.

1½" Max.

1H391 Modified { 3B584 replaced by 2B584; Catch Handle & Box reversed.

3A399

4A399

18"

2A399

7F1612, (X=22", Y=16")

NOTE:- Apparatus shown in "ON" position.

Hole in end of Slide to be opened out to ⅞" dia.

5A339 (X=2'-6")

2A340

1H447

1H242 1A339 (X=24")

20"

1A340

8F1612, (X=15", Y=12")

3A345 (X=15")

1A340

To Signal Varies, 25yds. approx.

40yds.

10yds.

VICTORIAN RAILWAYS

FOG SIGNALLING

Layout of "CLAYTON" Apparatus

4-12-25

Chief Engr. of Sigs. & Tels.

Drawn by L.J.P.

Traced by L.J.P.

This Drawing supersedes Drawing H44.

A409

A409

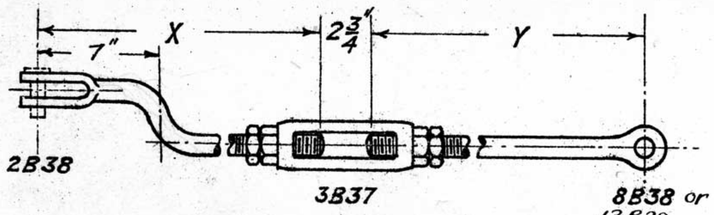

Standard Sets 1½" & 3"

9-12-25 — 1A410

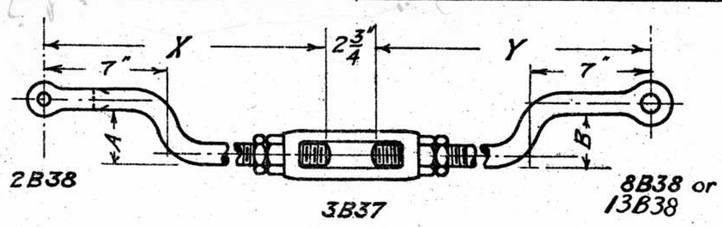

Standard Sets 1½" & 3"

9-12-25 — 5A410

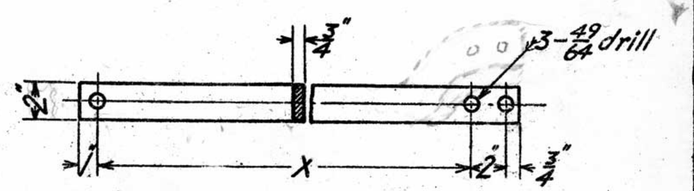

withdrawn 13A410

15-11-27 — 9A410

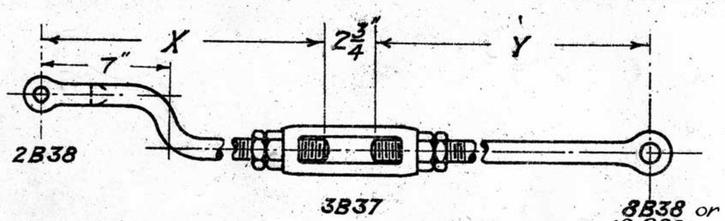

Standard Sets 1½" & 3"

9-12-25 — 2A410

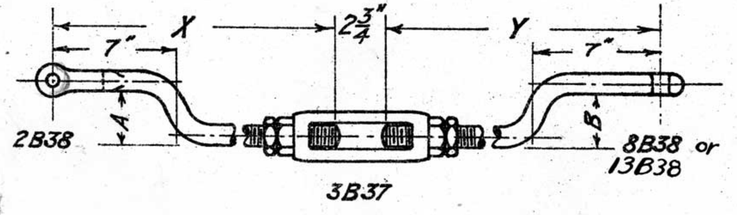

Standard Sets 1½" & 3"

9-12-25 — 6A410

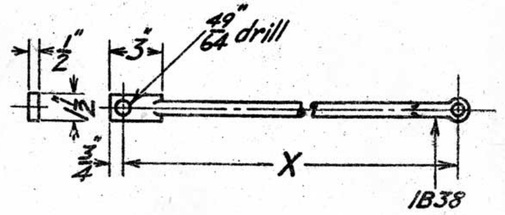

15-11-27 — 10A410

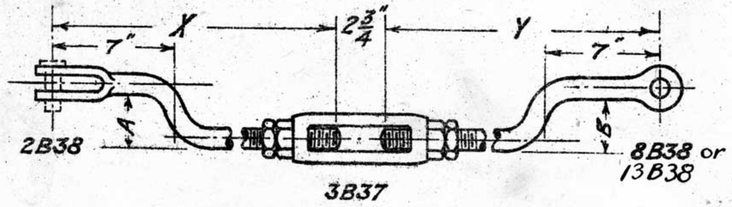

Standard Sets 1½" & 3"

9-12-25 — 3A410

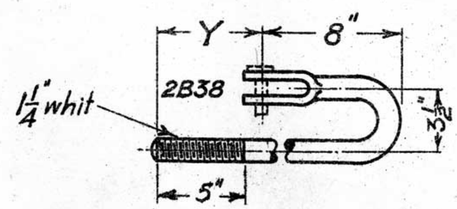

11-2-27 — 7A410

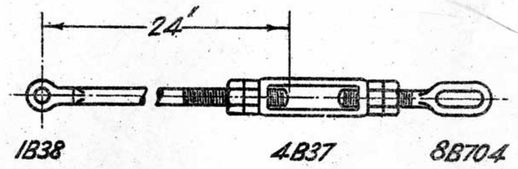

12-10-28 — 11A410

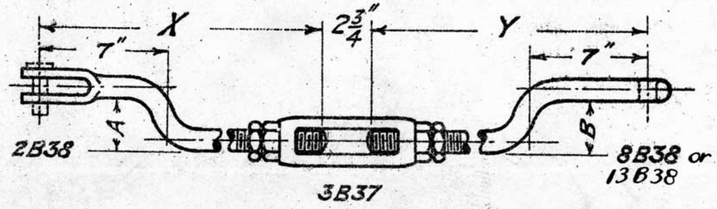

Standard Sets 1½" & 3"

9-12-25 — 4A410

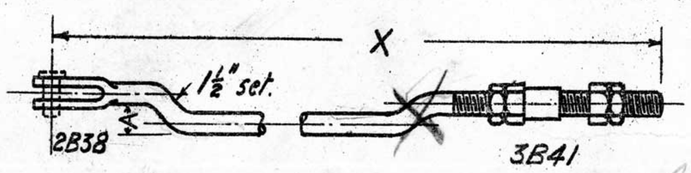

one set only at o.j.
to B.P.

13-10-27 — 8A410

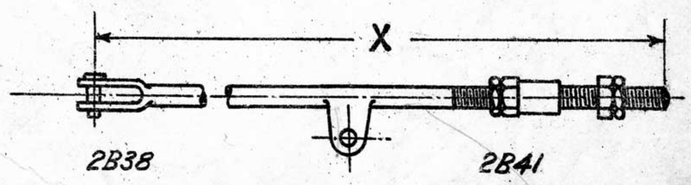

14-5-29 — 12A410

See later Blueprint.

NOTE
Amount of set to be stated. Long Jaw 2H186, Wide Jaw 3H186 or other special jaws will be supplied if specified stating at which end required.

VICTORIAN RAILWAYS

CONNECTING RODS

MISCELLANEOUS

9-12-25

Chief Engr Sigs & Tels	Drawn by	Traced by
	S.C.O.	S.C.O.

A410

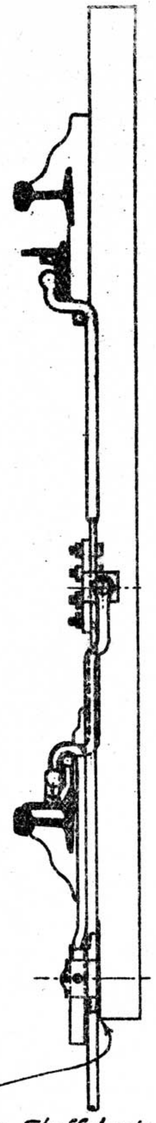

NOTE:- For Staff Lock Sleeper to be cut out ½"

APPARATUS			LOCK ROD
NAME	TYPE	ORDER NO	1F2158, 2F2158
Annett Lock	A	1H329	X = 18½"
" "	B	2H329	X = 18½"
Staff Lock		B186	X = 18½"
" " L.H.	Miniature	K22	X = 21½"
" " R.H.	"	K22	X = 18½"
Tablet Lock L.H.			X = 21½"
" " R.H.			X = 18½"

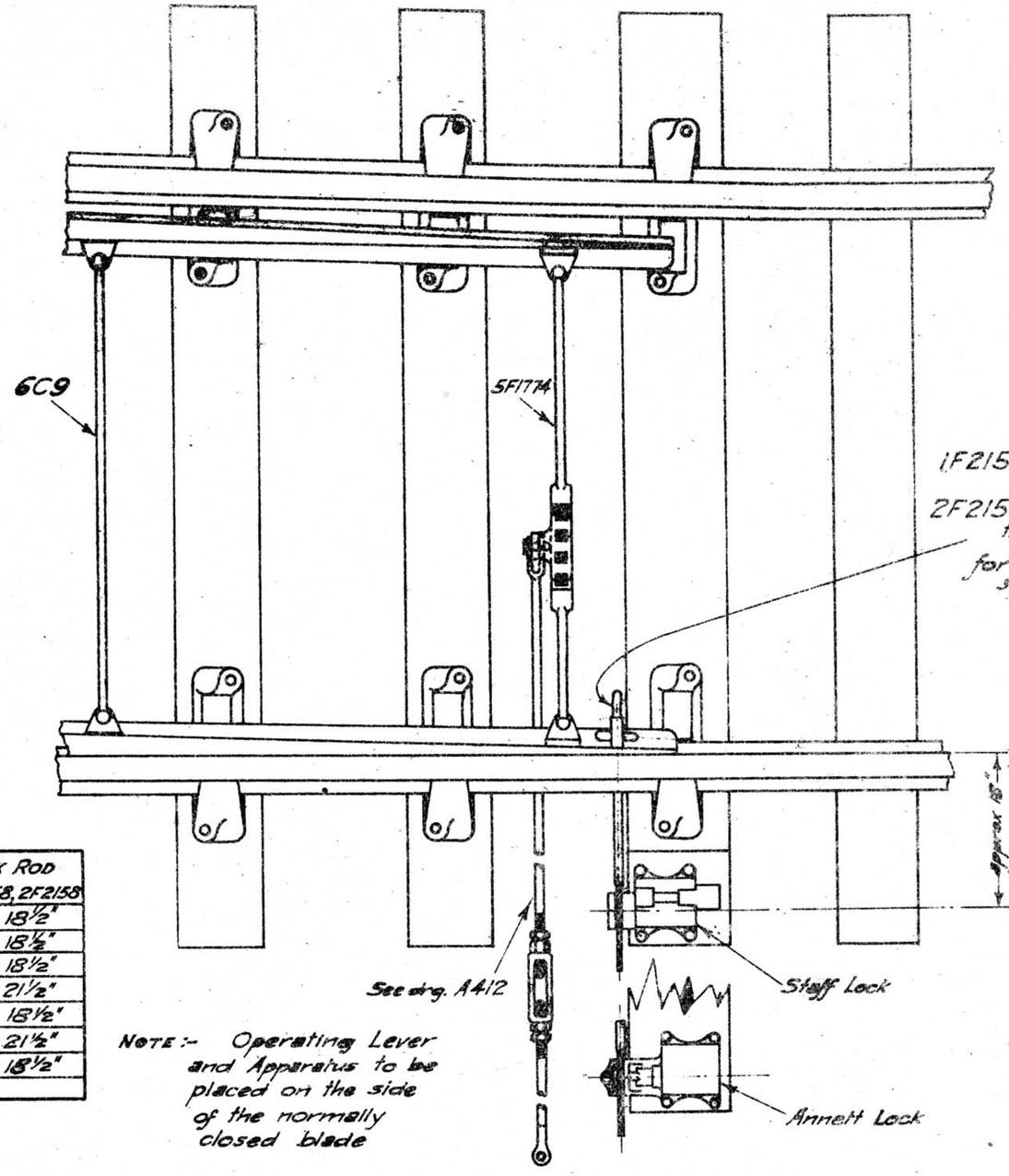

NOTE:- Operating Lever and Apparatus to be placed on the side of the normally closed blade

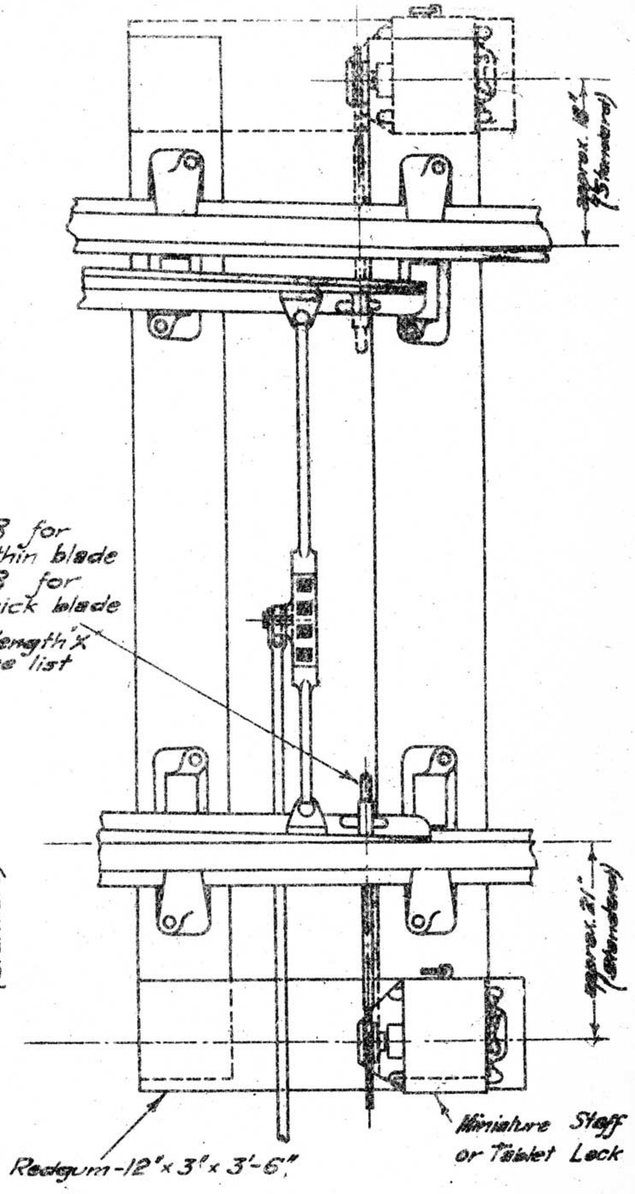

VICTORIAN RAILWAYS

POINT LAYOUT CLASS "X"

DIRECT ROD OPERATED

ANNETT, STAFF, OR TABLET LOCKED

Chief Engr. Sigs & Tels.	Drawn by S.C.O.	Traced by S.C.O.

A 411

L.78/27

1B587 5 Relays 24 Cells
2B587 3 " 16 "

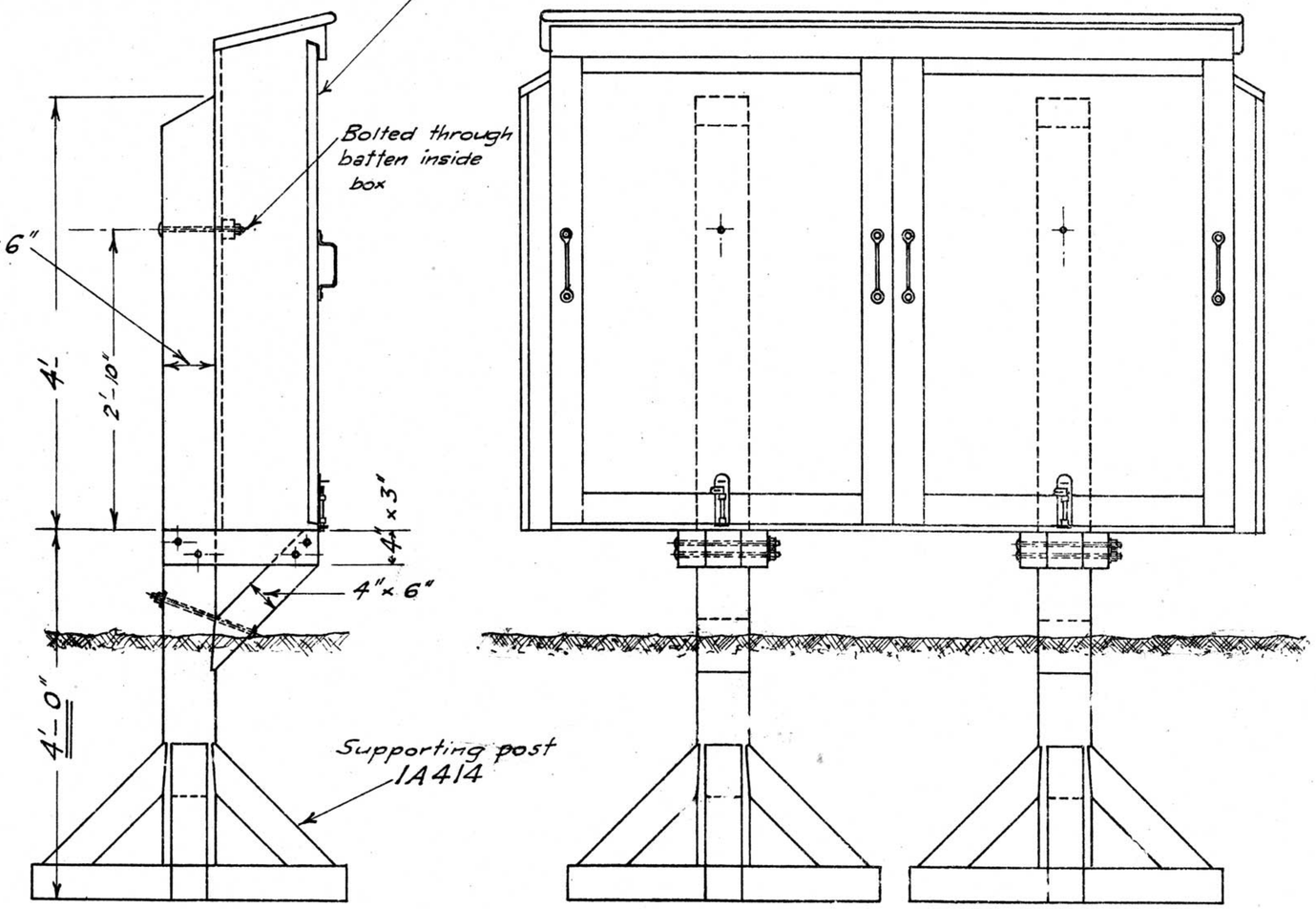

1-3-26 METHOD OF MOUNTING LARGE BOXES

4B587 2 Relays 8 Cells
3B587 1 Relay 6 Cells

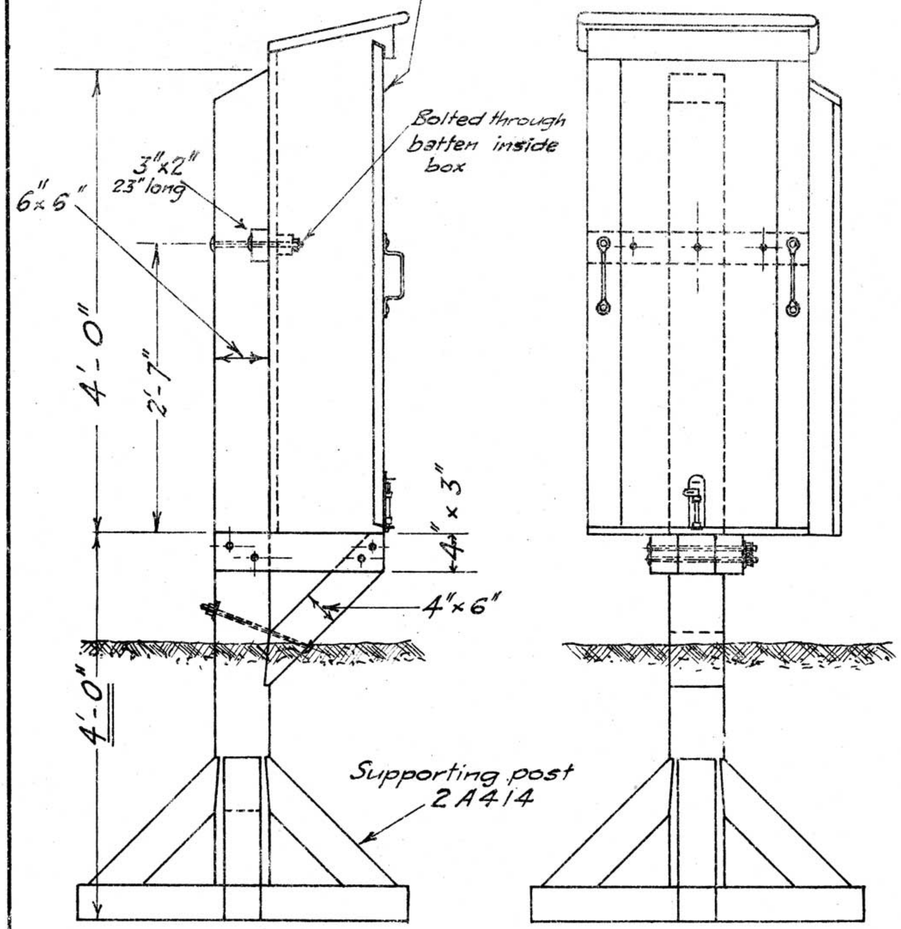

1-3-26 METHOD OF MOUNTING SMALL BOX

Boxes and supporting posts to be ordered separately

VICTORIAN RAILWAYS

RELAY & BATTERY BOXES

OUTDOOR TYPE

METHOD OF MOUNTING

1-3-26

Chief Engr Sigs & Tels.	Drawn by S.C.O.	Traced by S.C.O.

A414

L.63/27

	Without Earthing Rods	With Earthing Rods
TERMINAL BOX COMPLETE FOR 4 PAIRS	1A421	4A421
" " " " 8 "	2A421	5A421
" " " " 13 "	3A421	6A421

Nº	Name	Mat	Quantity					
			1A421	2A421	3A421	4A421	5A421	6A421
1B597	Box	C.I.	1			1		
2B597	Box	C.I.		1			1	
3B597	Box	C.I.			1			1
4B597	Terminal Base	Ebonite	1			1		
5B597	Terminal Base	Ebonite		1			1	
6B597	Terminal Base	Ebonite			1			1
7B597	Bush	Kauri	1	1	1	1	1	1
7B588	Earthing Rod "X" 3⅛"	Brass				1		
7B588	Earthing Rod "X" = 5"	Brass					1	
7B588	Earthing Rod "X" = 8⅛"	Brass						1
8H383	Support	Ebonite				2	2	2
1F833	Screw 4B.A. ⅝" Long Screw ⅜"	Brass				4	4	4
2F833	Screw 3B.A. ⅝" Long	Brass	4	4	4	4	4	4
2F833	Screw 4B.A. 9/16" Long	Brass				2	2	2
9H383	Wire Spacer	Fibre	1	1	1	1	1	1

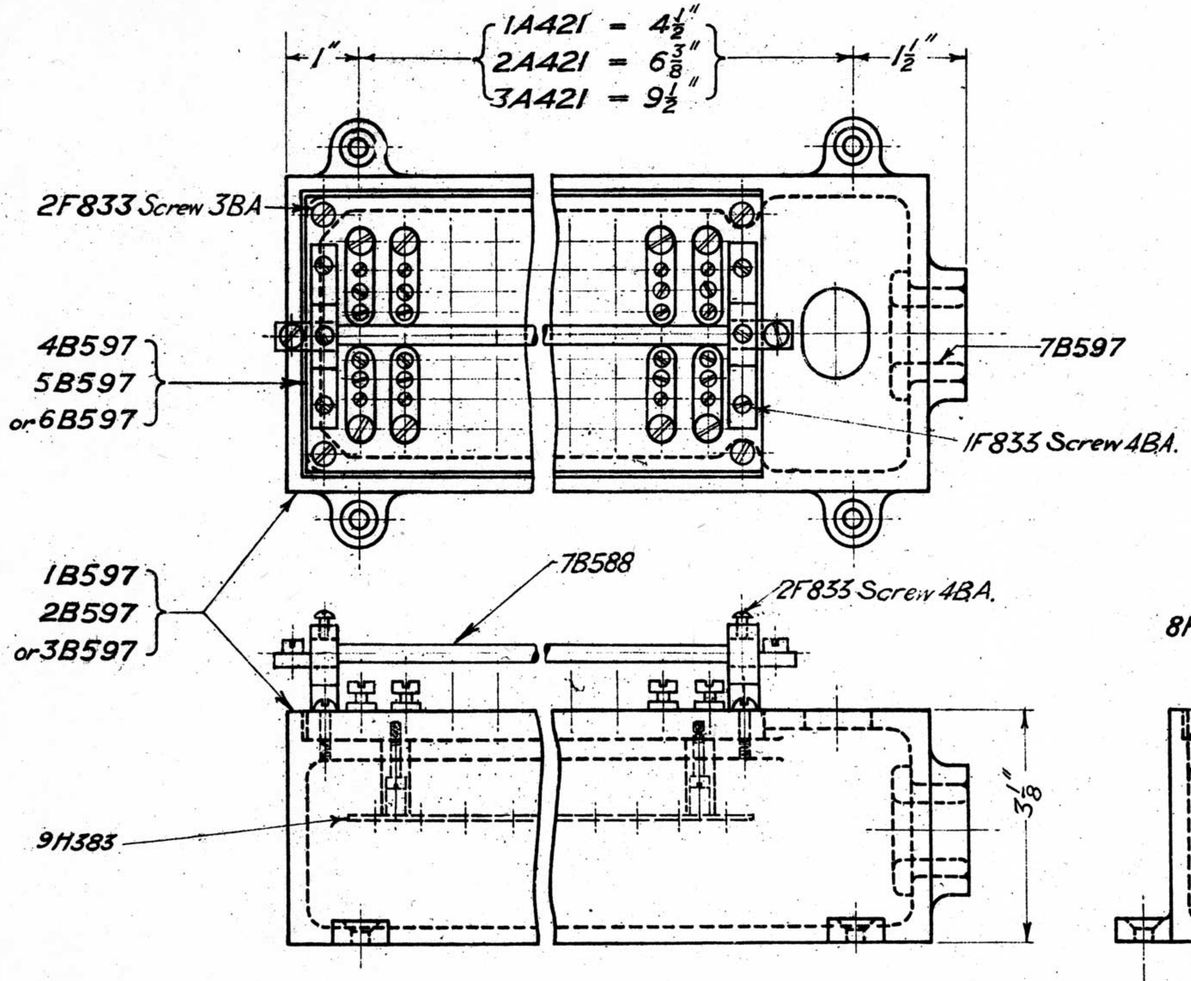

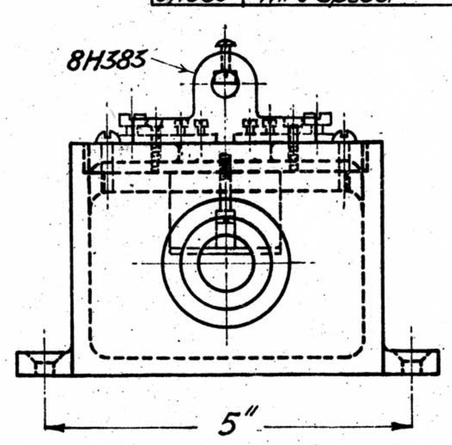

13 Pairs 6A421
8 " 5A421
4 " 4A421
13 " 3A421
8 " 2A421
4 " 1A421

26-5-26

TERMINAL BOX

10-10-28 Alteration Nº205 L.J.P.	10-2-28 Alteration Nº192 K.C.H.C.	11-7-27 Alteration Nº177 K.C.H.C.	VICTORIAN RAILWAYS TERMINAL BOX FOR LEAD COVERED CABLE TYPE "A" 4, 8 & 13 pairs ASSEMBLY 26-5-26

Chief Engr Sigs & Tels	Drawn by	Traced by
	E.A.	E.A.

A421

1418.26

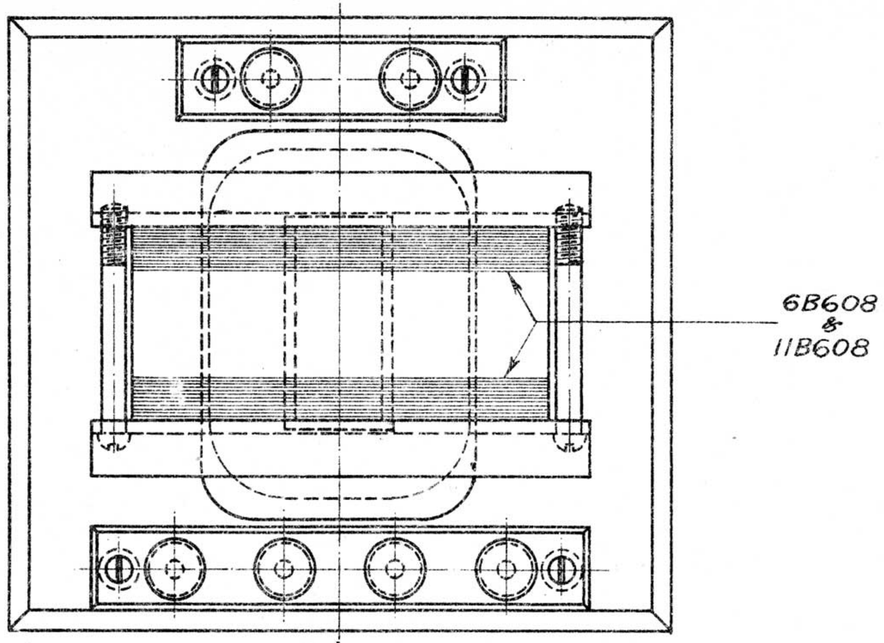

PLAN
(with cover removed)

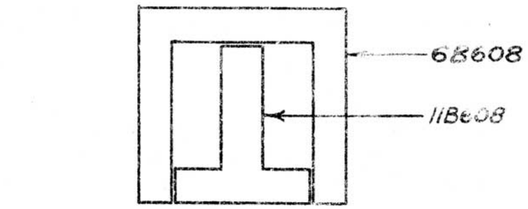

Method of fixing Laminations.
Alternate laminations to be in reverse position.

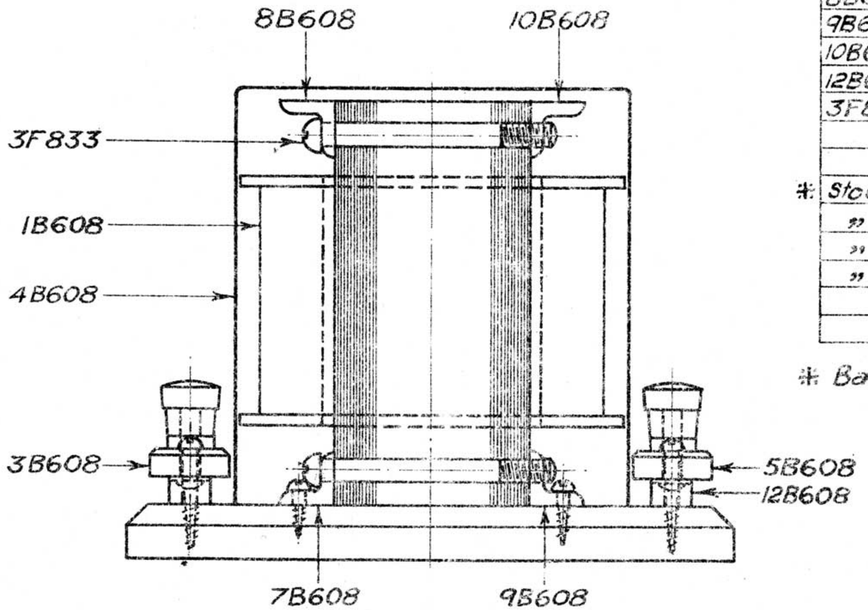

60 V.A. TRANSFORMER COMPLETE – 1A426

No.	NAME	Material	Quantity
1B608	Bobbin & Windings Complete		1
4B608	Cover	Tin Plate	1
3B608	Terminal Strip	Ebonite	1
5B608	" "	"	1
6B608	Lamination	"Stalloy"	80
11B608	"	"	80
7B608	Clamping Angle	M.S.	1
8B608	" "	"	1
9B608	" "	"	1
10B608	" "	"	1
12B608	Packing Piece.	Fibre	4
3F833	Screw O.B.A. 2" long, screwed ½"	M.S.	4
* Stock	Baseboard. 6"×5½"×½" Chamfered.	Soft Wood	1
"	No6. Rnd. Hd. Woodscrew 1" long	Brass	4
"	No6 " " " ⅜" "	"	4
"	No2 " " " ⅜" "	"	4

* Baseboard to be Black enamelled

5-8-26

1A426

VICTORIAN RAILWAYS

60 V.A. TRANSFORMER
CORE TYPE
STEP DOWN. 230V TO 100V, 110, 120V
ASSEMBLY

25-8-26

Chief Engr Sigs & Tels.	Drawn from Sample	Traced by
		L J A

A 426

L.64/27

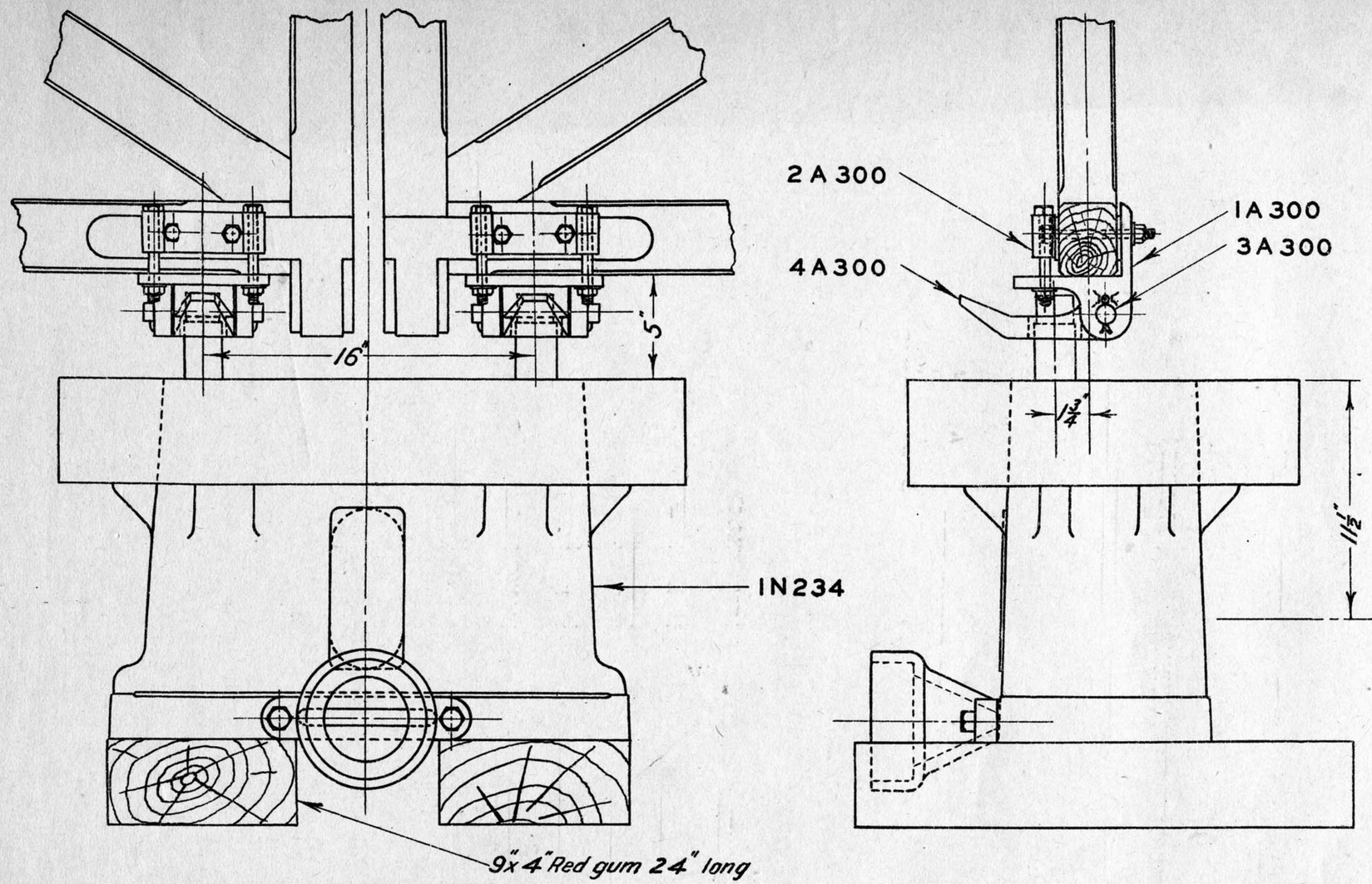

CATCH ON GATE COMPLETE – 2A451
GATE STOP TYPE "C" COMPLETE – 1A451

Part No	Name	Material	Quantity 1A451	Quantity 2A451
1N234	Gate Stop Ground Apparatus		1	–
1A300	Bracket	M.I.	–	12
2A300	Support	M.I.	–	12
3A300	Spindle	M.S.	–	12
4A300	Catch	M.I.	–	12
2A451	Catch Complete		21	–
Stock	Bolt ½" whit. hx. hd. 4½" long + sp. wash		–	24
	" ½" " " " 4¼" " " " "		–	24
	¼" Split Pin 2" long		–	24

NOTE – Timber Collar 3F1298 ordered separately

See Later B Imprint

Stock Item 2008

12-2-29

2A451
1A451

11·12·41 Alteration No 490	8·12·38 Alteration No 407	9·6·38 Alteration No 386	REDRAWN INCLUDING ALTERATION NO 216 ORIGINAL WITH SAME TITLE DATED:- 6-4-27.	VICTORIAN RAILWAYS GATE STOP TYPE "C" ASSEMBLY 12-2-29	CHIEF ENG. SIGS & TEL.	DRAWN BY S.C.O.	TRACED BY P.J.D.

A451

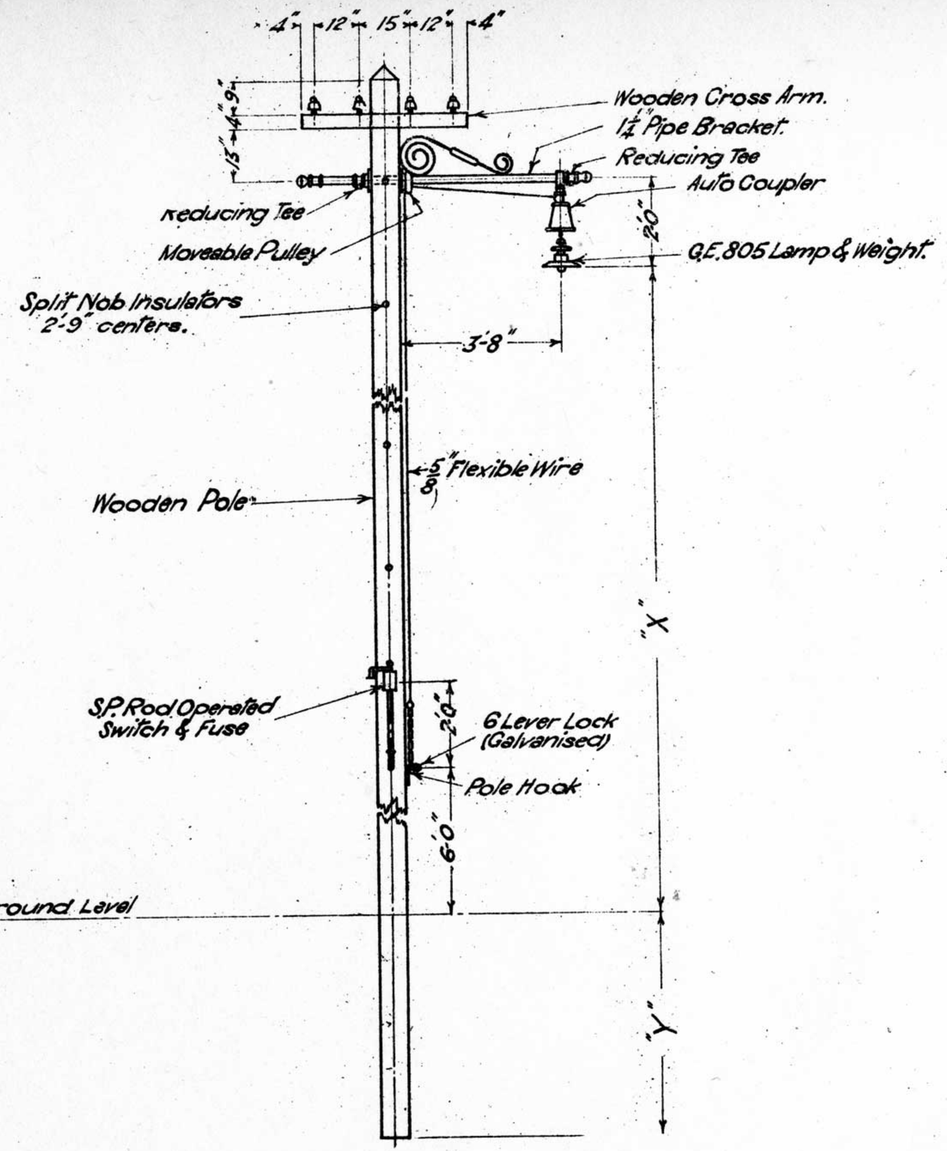

22-6-27

AUTO COUPLER TYPE

35' POLE X-25-4, Y-5-6" 2A454
30' " X-20-10, Y-5-0" 1A454

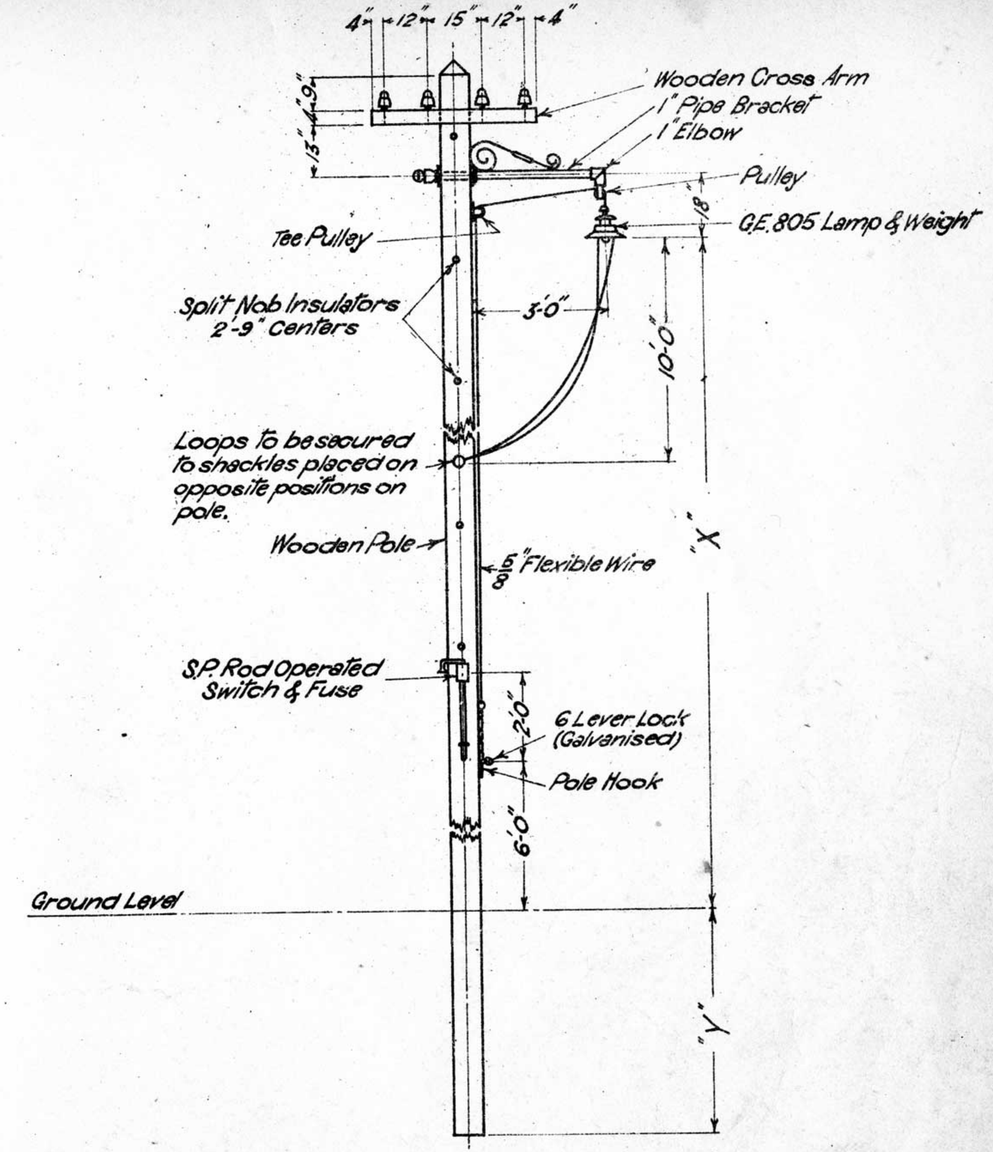

22-6-27

LONG LOOP TYPE

35' POLE X-25-10, Y-5-6" 4A454
30' " X-21-4, Y-5-0" 3A454

VICTORIAN RAILWAY'S

ELECTRIC LIGHTING

POLE & BRACKET ASSEMBLY

22-6-27

Chief Engr. Sigs. & Tels.	Drawn from Sample	Traced by K.C.H.C.

A454

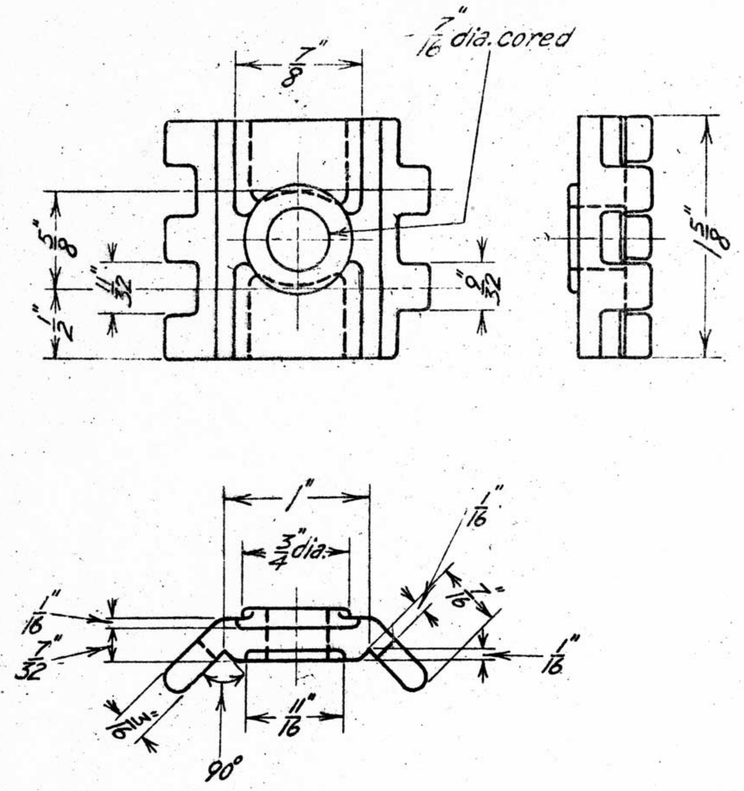

30-6-27 Copper CLAMP PLATE 3A455

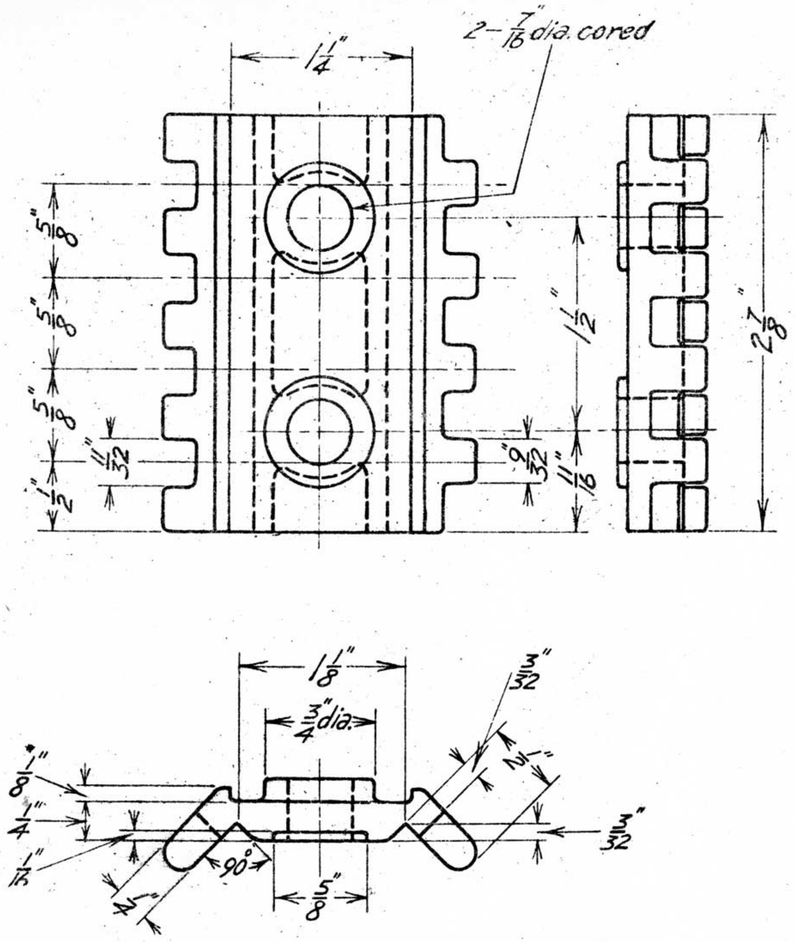

30-6-27 Copper CLAMP PLATE 4A455

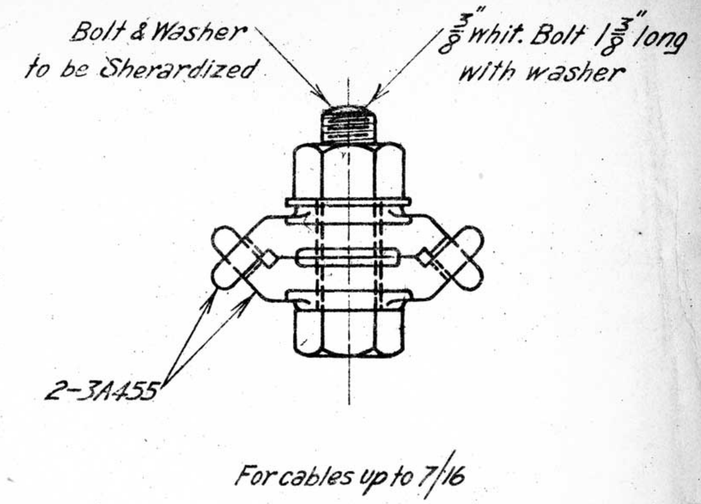

30-6-27 CLAMP COMPLETE 1A455

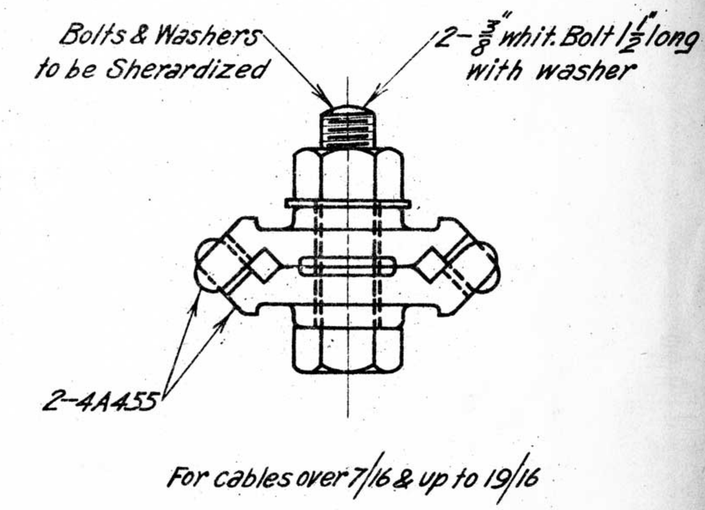

30-6-27 CLAMP COMPLETE 2A455

VICTORIAN RAILWAYS

CLAMP FOR CABLE TAP OFF

30-6-27

Chief Engr. Sigs. & Tels.	Drawn from Sample	Traced by C.W.F
	JHOC	

A455

JOINT BOX 12" LONG COMPLETE —— 1A456
" " 18" " " —— 2A456
" " 2'-3" " " —— 3A456

Nº	NAME	MATL	QUANTITY		
			1A456	2A456	3A456
1B650	Box	C.I.	1		
2B650	Box	C.I.		1	
3B650	Box	C.I.			1
4B650	Cover	Sheet I.	1		
5B650	Cover	Sheet I.		1	
6B650	Cover	Sheet I.			1
7B650	Packing Piece	Imp. Wood	2	2	2
8B650	Clamp Ring	G.M.	2		
9B650	Clamp Plate	Sheet I.	2		
10B650	Supporting Block	Imp. Wood	2	2	2
Stock	Screws 3/16" Whit. Rnd. Hd. 3/8" long.	M.S.	6	6	6
"	Bolts 5/16" Whit. Hex. Hd. 1 3/4" long with Nuts & Spring Washers.	M.S.	8		
"	Bolts 5/16" Whit. Hex. Hd. 2 1/4" long with Nuts & Spring Washers.	M.S.		8	8
	1/2" Gas Plug		1	1	1

Note:-Clamp Insulators IF2340 to be ordered separately as required.

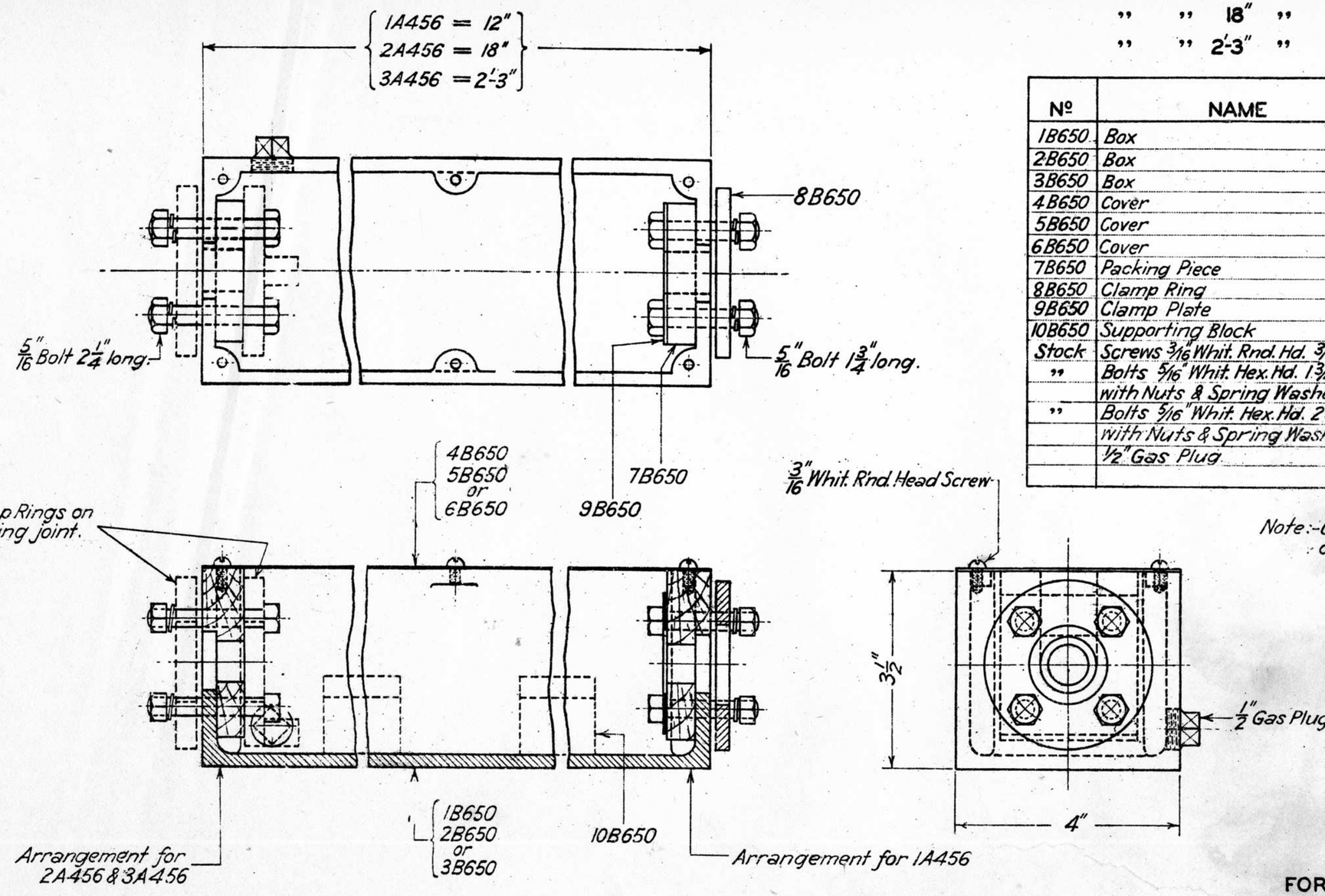

FOR RENEWAL OF SLEEVE JOINT — 2'-3" LONG —— 3A456
18" " —— 2A456
FOR NEW JOINT —— ~~12"~~ 18" " —— 1A456

29-6-27

16-12-27
Alteration Nº 189
E.C.M.

VICTORIAN RAILWAYS

JOINT BOX FOR 2200V. CABLE RUNNING JOINT ASSEMBLY

29-6-27

Chief Engr Sigs. & Tels.

Drawn by E.C.M.

Traced by E.C.M.

A456

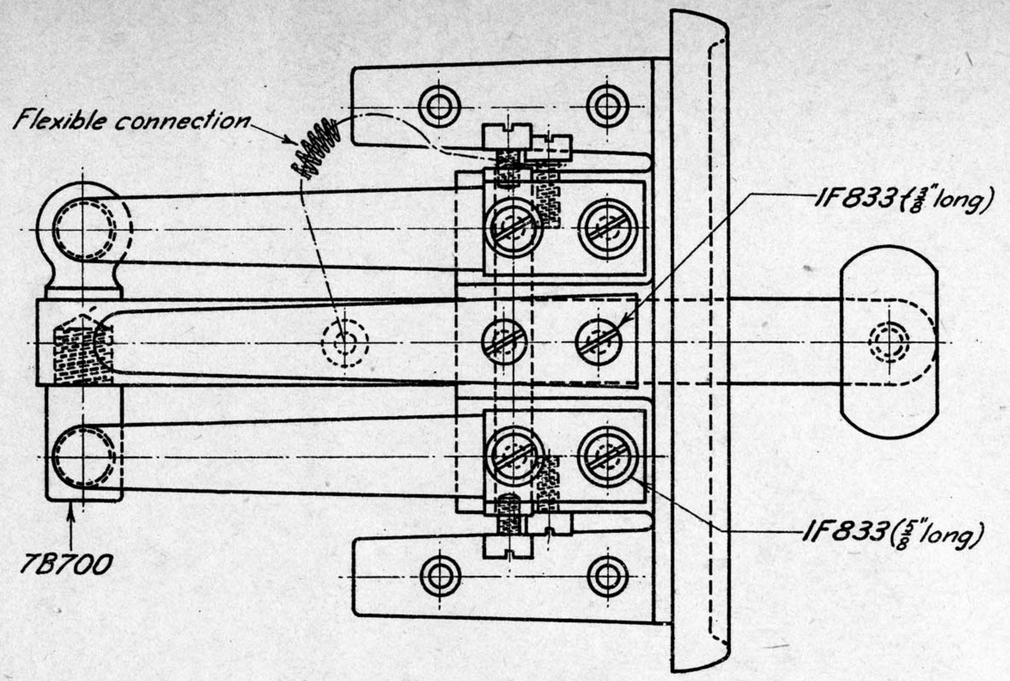

PLUNGER (COMPLETE) — 1A480

Nº	NAME	Material	Quantity
1B700	Base	Brass	1
2B700	Contact Arm	"	1
3B700	" Spring	Sp. St.L.	4
4B700	Spring	" "	1
5B700	Bush	Canvas Bakelite Fibre	8
6B700	Insulation	"	4
7B700	"	"	1
8B700	Contact Bracket	Brass	2
9B700	" "	"	2
10B700	Button	Ebonite	1
1F833	Screw 3BA, 5/8" long	Brass	8
1F833	" 3BA, 3/8" "	"	5
3F833	" 3BA, 5/8" "	"	1
Stock	Pin 1/4" dia. 2 1/4" long	M.S.	1
"	Flexible connection		1

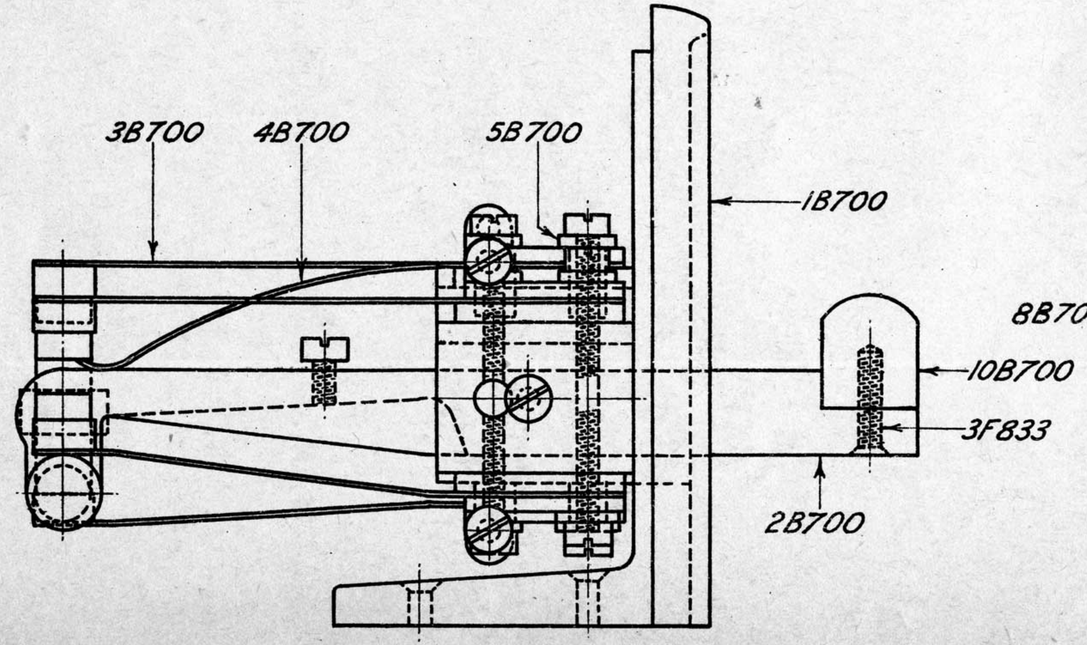

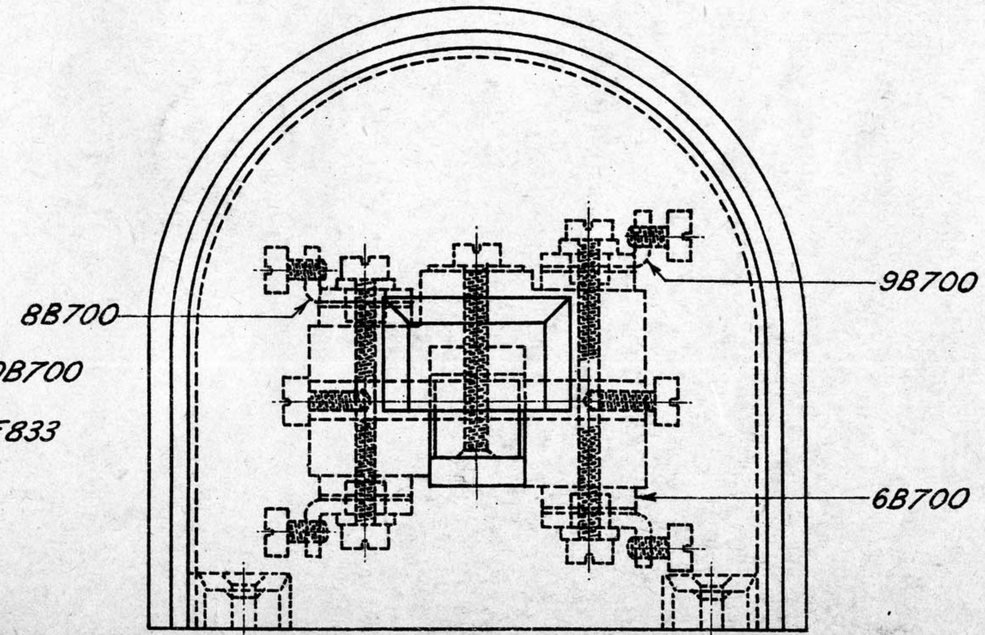

Chief Eng. Sigs. & Tels.

Drawn from Sample

Traced by L.J.P.

A480

VICTORIAN RAILWAYS

PLUNGER FOR BLOCK INSTRUMENT ASSEMBLY

19-10-28

15.6.42

Alteration Nº 516

A480

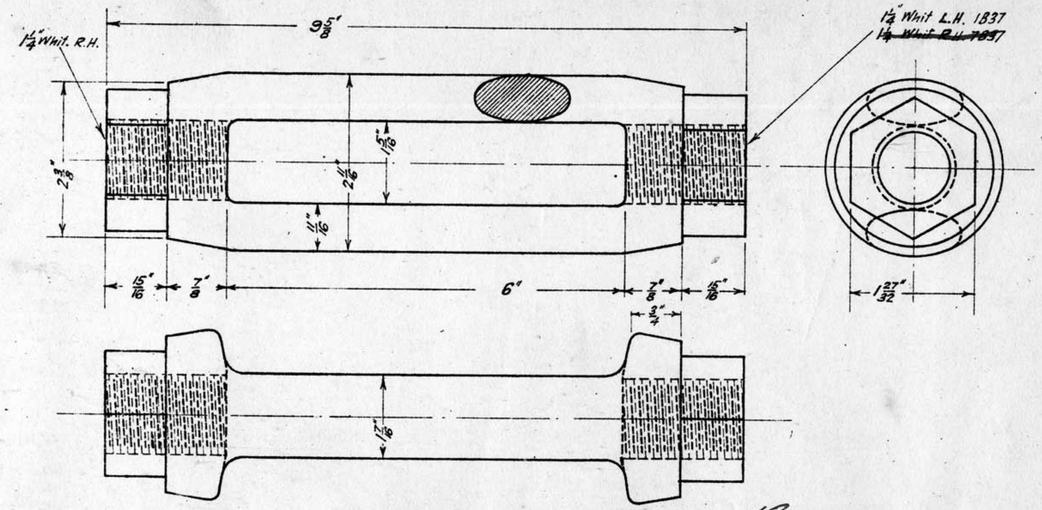

W.I.

1¼" Adjusting Screw

Cancelled Alt N° 727

~~Screwed Right Hand both ends 7B37~~

Screwed Right and Left Hand 1B37

25-7-28

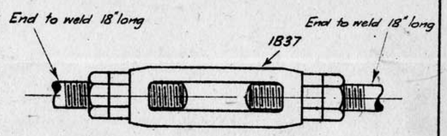

N°	NAME	MATERIAL	QUANTITY
1B37	1¼" Adjusting Screw	W.I.	1
Stock	1¼ Whit Nut Tapped R.H.	"	1
"	1¼" " " L.H.	"	1
"	1¼" Rod screwed 6" R.H 18" long with end to weld	"	1
"	1¼" Rod screwed 6" L.H. 18" long with end to weld	"	1

Stores

Section ____

Item N° ____

25-7-23 1¼" Adjusting Screw — Complete 3B37

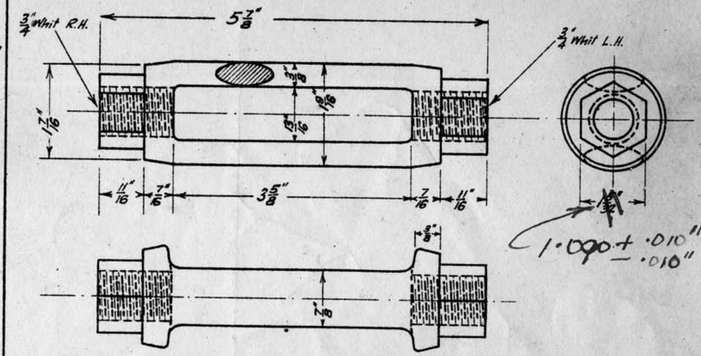

Alt N° 727 13-9-49 W.I.

25-7-23 ¾" Adjusting Screw 2B37

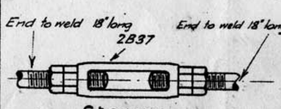

N°	NAME	MATERIAL	QUANTITY
2B37	¾" Adjusting Screw	W.I	1
Stock	¾" Whit Nut Tapped R.H.	"	1
"	¾" " " L.H	"	1
"	¾" Rod screwed 4" R.H 18" long with end to weld	"	1
"	¾" Rod screwed 4" L.H. 18" long with end to weld	"	1

Stores

Section ____

Item N° ____

W.R.O.J.

25-7-23 ¾" Adjusting Screw — Complete 4B37

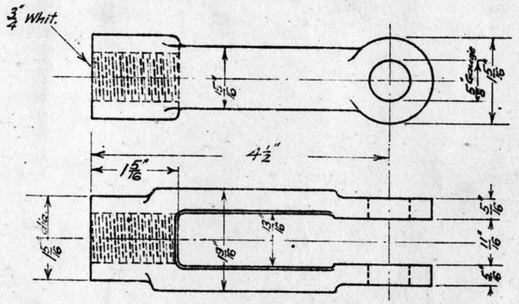

W.I.

25-7-23 ¾" Adjusting Jaw 5B37

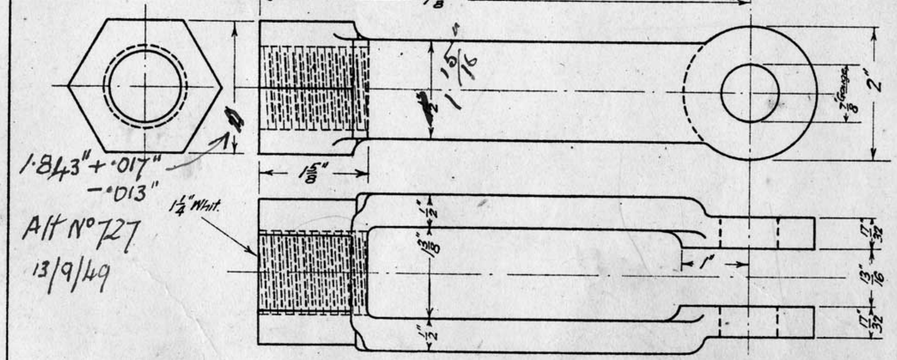

W.I.

1¼" Adjusting Jaw 8B37

25-7-23

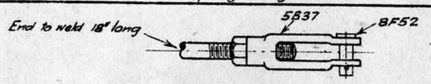

N°	NAME	MATERIAL	QUANTITY
5B37	¾" Adjusting Jaw	W.I	1
8F52	¾" Pin 1⅝ long	"	1
Stock	¾" Nut	"	1
"	¾" Rod screwed 4" 18" long with end to weld	"	1

Stores

Section ____

Item N° ____

25-7-23 ¾" Adjusting Jaw — Complete 6B37

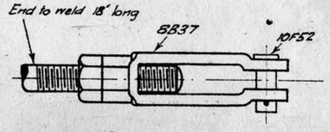

N°	NAME	MATERIAL	QUANTITY
8B37	1⅛" Adjusting Jaw	W.I	1
10F52	Pin 2⅜" long	"	1
Stock	1¼" Nut	"	1
	1¼" Rod screwed 6" 18" long with end to weld	"	1

25-7-23 1¼" Adjusting Jaw — Complete 9B37

Alteration 727

L.328/23

Redrawn :— Original under same Title dated 12-9-16

25-7-23

Reference For additional Couplings see Drg. A10 & A77

VICTORIAN RAILWAYS

ADJUSTABLE COUPLINGS

25-7-23

Chief Engr. of Signal & Tels	Drawn by	Traced by
	S.C.O.	S.C.O.

B37

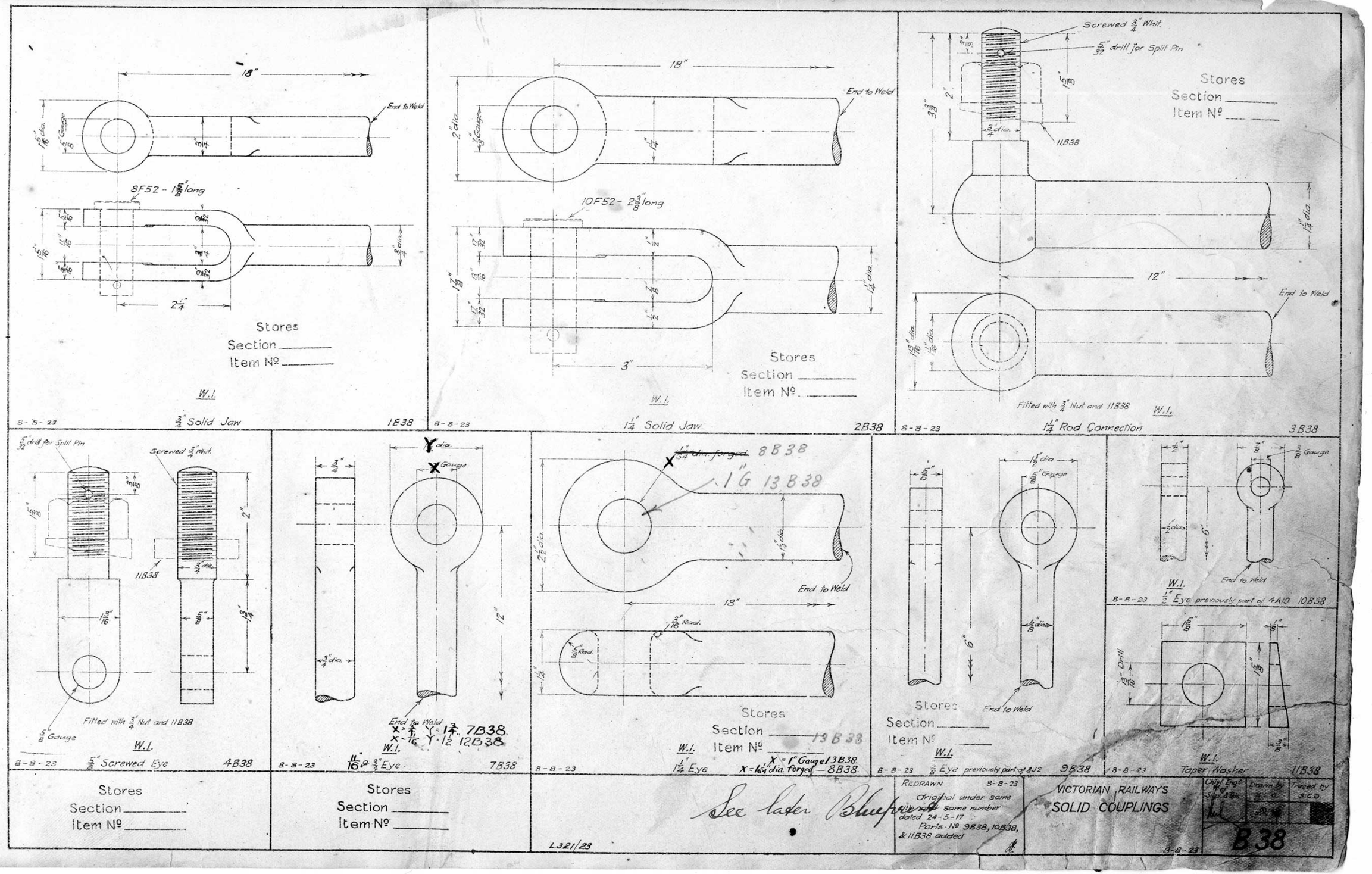

18"
End to Weld
8F52 - 1 5/8" long
2 1/4"
Stores
Section
Item No
W.I.
8-8-23
3/4" Solid Jaw
1B38
18"
End to Weld
10F52 - 2 3/8" long
3"
Stores
Section
Item No
W.I.
8-8-23
1 1/4" Solid Jaw
2B38
Screwed 3/4" Whit.
5/32" drill for Split Pin
11B38
12"
End to Weld
Fitted with 3/4" Nut and 11B38
W.I.
8-8-23
1 1/4" Rod Connection
3B38
5/32" drill for Split Pin
Screwed 3/4" Whit.
11B38
Fitted with 3/4" Nut and 11B38
5/8" Gauge
W.I.
8-8-23
5/8" Screwed Eye
4B38
Y dia.
X Gauge
End to Weld
X = 3/4 Y = 1 3/4 7B38
X = 11/16 Y = 1 1/2 12B38
W.I.
8-8-23
11/16" & 3/4" Eye
7B38
1 1/64" dia. forged 8B38
1"G 13B38
End to Weld
18"
Stores
Section 13B38
Item No
W.I.
8-8-23
1 1/4" Eye
X = 1" Gauge 13B38
X = 1 1/64" dia. forged — 8B38
1 1/2" dia
5/8" Gauge
End to Weld
Stores
Section
Item No
W.I.
8-8-23
5/8" Eye previously part of 8J2
9B38
3/8" Gauge
End to Weld
W.I.
8-8-23
1/2" Eye previously part of 4A10
10B38
W.I.
8-8-23
Taper Washer
11B38
Stores
Section
Item No
Stores
Section
Item No
See later Blueprint
L.321/23
REDRAWN 8-8-23
Original under same title and same number dated 24-5-17
Parts No 9B38, 10B38, & 11B38 added
VICTORIAN RAILWAYS
SOLID COUPLINGS
Chief Engr. of Sigs. & Tels.
Drawn by S.C.O.
Traced by S.C.O.
8-8-23
B38

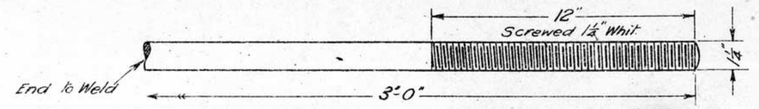

To be supplied with :—

5B41	Sleeve	M.S.	1
Stock	1½" Nut	"	1
"	1¼" Lock Nut ⅞" thick	"	2

Stores
Section _____
Item No _____

5-11-21 Screwed End M.S. 1B41

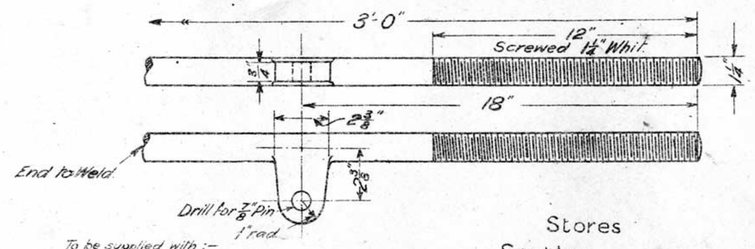

To be supplied with :—

5B41	Sleeve	MS	1
Stock	1½" Nut	"	1
"	1¼" Lock Nut ⅞" thick	"	2

Stores
Section _____
Item No _____

5-11-21 Screwed End M.S. 2B41

Stores
Section _____
Item No _____

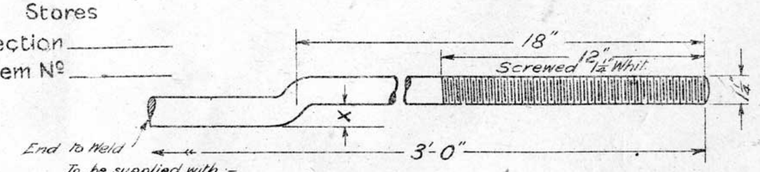

To be supplied with :—

5B41	Sleeve	MS	1
Stock	1½" Nut	"	1
"	1¼" Lock Nut ⅞" thick	"	2

X = 2½"	9B41
X = 2"	8B41
X = 1½"	7B41
X = 1"	3B41

22-8-22 All-31
5-11-21 Screwed End M.S.

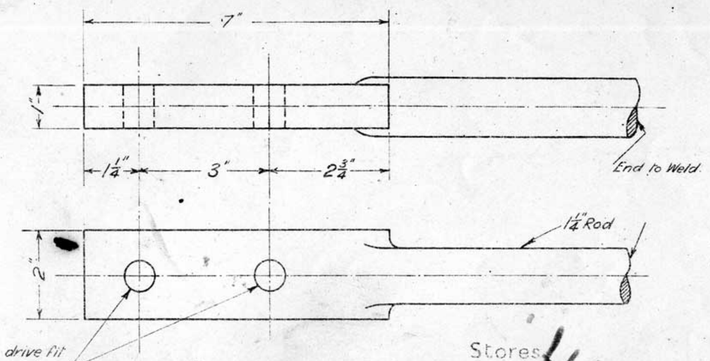

Stores
Section _____
Item No _____

5-11-21 Flat End M.S. 6B41

c.c.c.-17/2/44

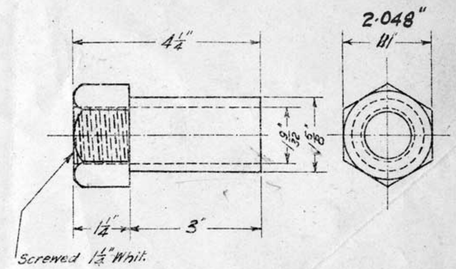

Stores
Section _____
Item No 546

5-11-21 Sleeve M.S. 5B41

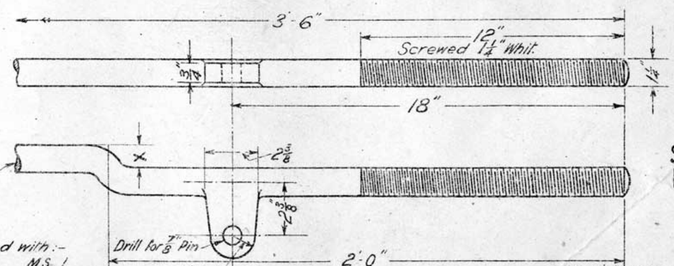

To be supplied with :—

5B41	Sleeve	MS.	1
Stock	1½" Nut	"	1
"	1¼" Lock Nut (⅞" thick)	"	2

X = 2½"	16B41
X = 2"	15B41
X = 1½"	14B41
X = 1"	13B41

5-11-21 Screwed End M.S.

Stores
Section _____
Item No _____

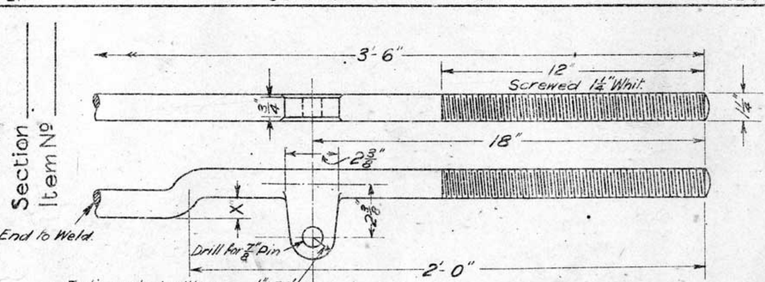

To be supplied with :—

5B41	Sleeve	MS.	1
Stock	1½" Nut	"	1
"	1¼" Lock Nut ⅞" thick	"	2

X = 2½"	12B41
X = 2"	11B41
X = 1½"	10B41
X = 1"	4B41

5-11-21 Screwed End M.S.

L.321/23

22-2-48
Screwed ends to be 1·250" – ·005"
KFW/JBB

5-11-21
Redrawn including Rev. 1 Parts 10B41, 11B41, 12B41, 13B41, 14B41, 15B41 & 16B41 added.
Original dated 23-3-17

VICTORIAN OPERA CO

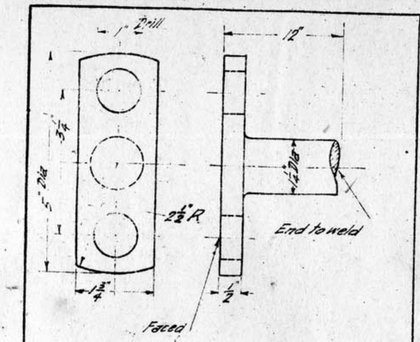

7-9-16 1¼" T-Connection 1B44

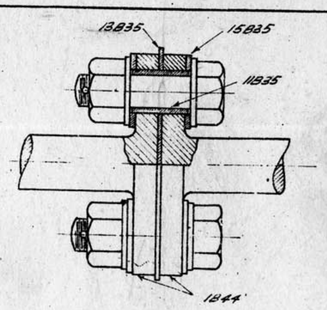

Nº	Name	Mat'l	Qnty
1B44	1¼" T-Connection	M.S.	2
11B35	Insulating Bush	Fibre	2
13B35	" Plate	"	1
15B35	" Washer	"	4
Stock	¾" bolt-2¾" long & Nut (drilled for S.P.)	M.S.	2
"	Washer ¾" x 3/32 - 1½" Dia.	"	4

Stores
Section _____
Item Nº _____

7-9-16 1¼" Insulated Joint T-Type (Ends to weld) 2B44

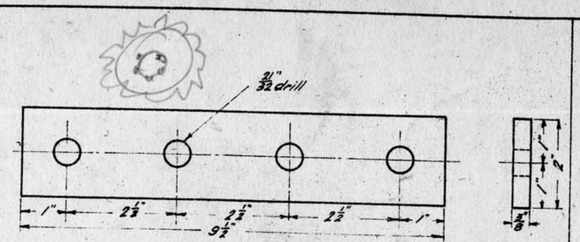

30-8-21 Fishplate 7B44

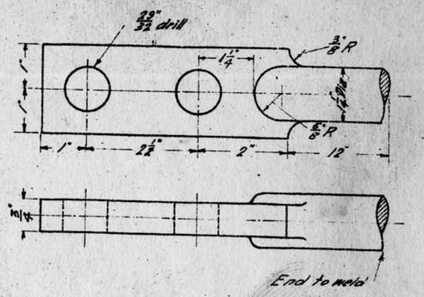

30-8-21 1¼" Flat Connection 8B44

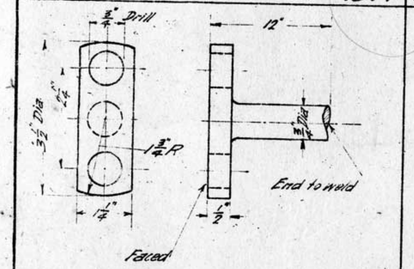

7-9-16 ¾" T-Connection 3B44

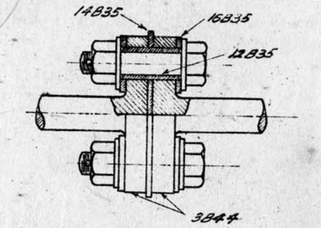

Nº	Name	Mat'l	Qnty
3B44	¾" T-Connection	M.S.	2
12B35	Insulating Bush	Fibre	2
14B35	" Plate	"	1
16B35	" Washer	"	4
Stock	½" bolt-2¼" long & Nut (drilled for S.P.)	M.S.	2
"	½" Washer 3/32 thick 1⅛" dia.	"	4

Stores
Section _____
Item Nº _____

7-9-16 ¾" Insulated Joint T-Type (Ends to weld) 4B44

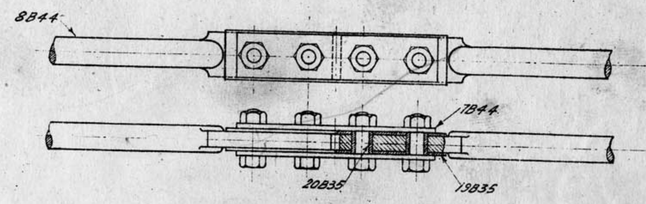

Nº	Name	Mat'l	Qnty
7B44	Fishplate	M.S.	2
8B44	Flat Connection	"	2
19B35	Insulation Plate	Fibre	2
20B35	" Bush	"	4
Stock	Bolt ⅝" - 2½" long & Nut	M.S.	4

Stores
Section _____
Item Nº _____

30-8-21 1¼" Insulated Joint-Flat Type (Ends to weld) 9B44

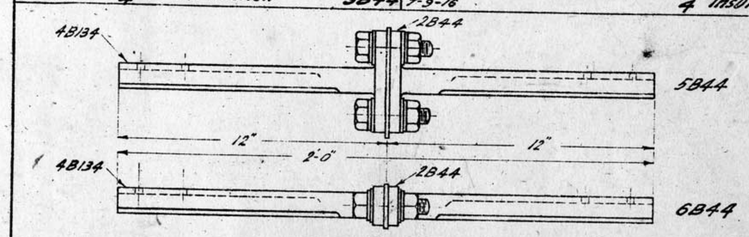

Nº	Name	Mat'l	Qnty
2B44	Insulated Joint (complete)	—	1
4B134	Fishplate End	M.S.	2

Stores
Section _____
Item Nº _____

16-10-17 1¼" Insulated Joint T-Type (Ends for channel rod)

Vertical Type 5B44
Horizontal " 6B44

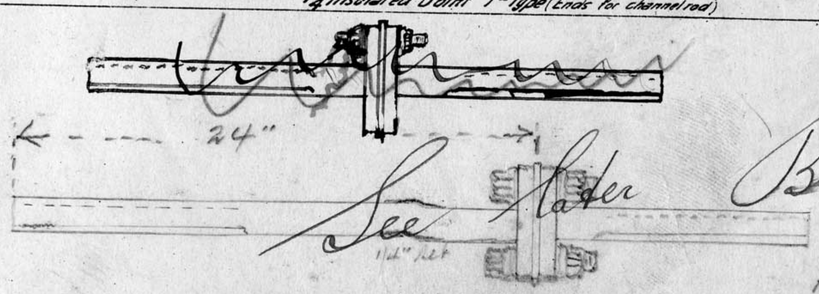

See later Blueprint

VERTICAL 11B44
HOR 12B44

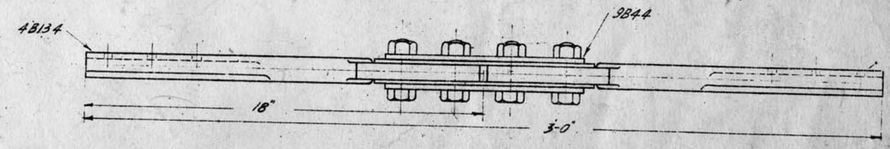

Nº	Name	Mat'l	Qnty
9B44	Insulated Joint (complete)	—	1
4B134	Fishplate End	M.S.	2

Stores
Section _____
Item Nº _____

30-8-21 1¼" Insulated Rod Joint - Flat Type (Ends for channel rod) 10B44

Parts 11B44 & 12B44 added.

L.322/23

2 30-8-21
Redrawn including Revision 1
Original under same title dated 7-9-16
Parts Nº 7B44-8B44-9B44 & 10B44 added.

R.G.C.

VICTORIAN RAILWAYS
INSULATED ROD JOINTS

Engineer of Signals	Drawn by F.J.W.	Traced by F.J.W.
[signature]	[signature]	

B44

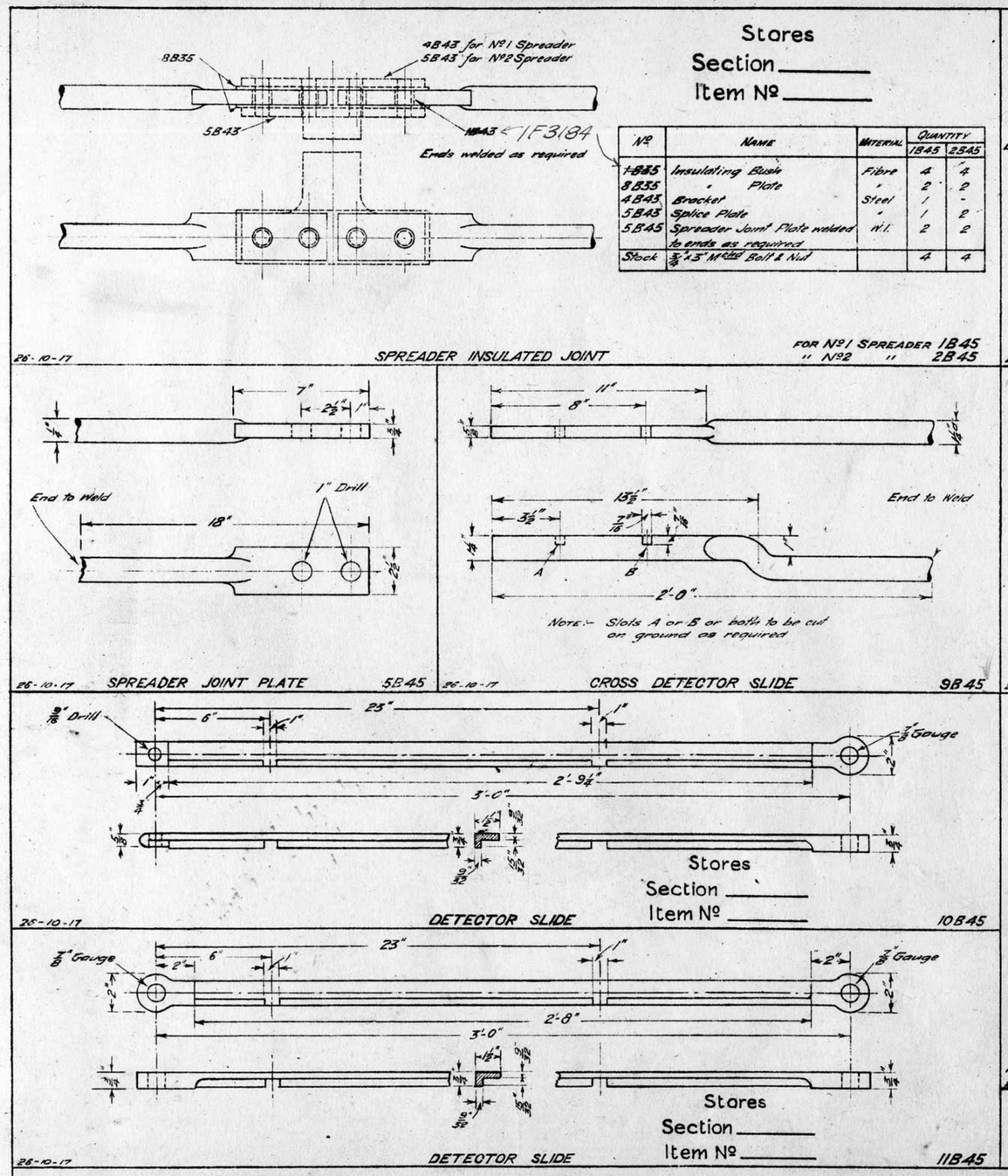

Stores
Section
Item No
8B35
4B43 for No1 Spreader
5B43 for No2 Spreader
5B43
1B43 ← 1F3184
Ends welded as required
No | Name | Material | Quantity 1B45 | 2B45
1B35 Insulating Bush | Fibre | 4 | 4
8B35 " Plate | " | 2 | 2
4B43 Bracket | Steel | 1 | -
5B43 Splice Plate | " | 1 | 2
5B45 Spreader Joint Plate welded to ends as required | W.I. | 2 | 2
Stock 3/4"x3" Mchd Bolt & Nut | | 4 | 4
26-10-17
SPREADER INSULATED JOINT
FOR No1 SPREADER 1B45
" No2 " 2B45
End to Weld
3B45
15B45
18"
26-10-17
SPREADER END
15B45
3B45
1" Whit
1/4" Split Pin
3/4" rad.
End to Weld
18"
26-10-17
SPREADER END (COMPOUNDS)
4B45
End to Weld
1" Drill
18"
26-10-17
SPREADER JOINT PLATE
5B45
End to Weld
2'-0"
Note:- Slots A or B or both to be cut on ground as required
26-10-17
CROSS DETECTOR SLIDE
9B45
End to Weld
2'-0"
26-10-17
CROSS DETECTOR SLIDE
12B45
End to Weld
1" Gauge
1/4" Split Pin
18"
26-10-17
SPREADER END (COMPOUNDS)
13B45
9/16" Drill
7/8" Gauge
23"
2'-9 1/4"
3'-0"
Stores
Section
Item No
26-10-17
DETECTOR SLIDE
10B45
7/8" Gauge
7/8" Gauge
23"
2'-8"
3'-0"
Stores
Section
Item No
26-10-17
DETECTOR SLIDE
11B45
℄ of Guide
4-11/16" Punched
℄ of Detector
Tap 1/2" Whit
2'-6"
4-Tap 1/2" Whit
These 4 additional holes required in 14B45 only.
Tap 1/2" Whit
Stores
Section
Item No
17-9-21
26-10-17
FOUNDATION PLATE
For two Detectors 14B45
" One Detector - 6B45
2 23-8-23
Part No 15B45
1 17-9-21
Part No 14B45 added.
REDRAWN 26-10-17
Part No 7B45 & List of Parts 8B45 cancelled. Part No 13B45 added. Original Title "Dwarf Semaphore (Mech)" dated 30-10-17
VICTORIAN RAILWAYS
POINT LAYOUTS & DETECTION
DETAILS
26-10-17
Drawn by S.C.O.
Traced by S.C.O.
6-2-27
Alteration
No 176
Engineer of Signals
B45

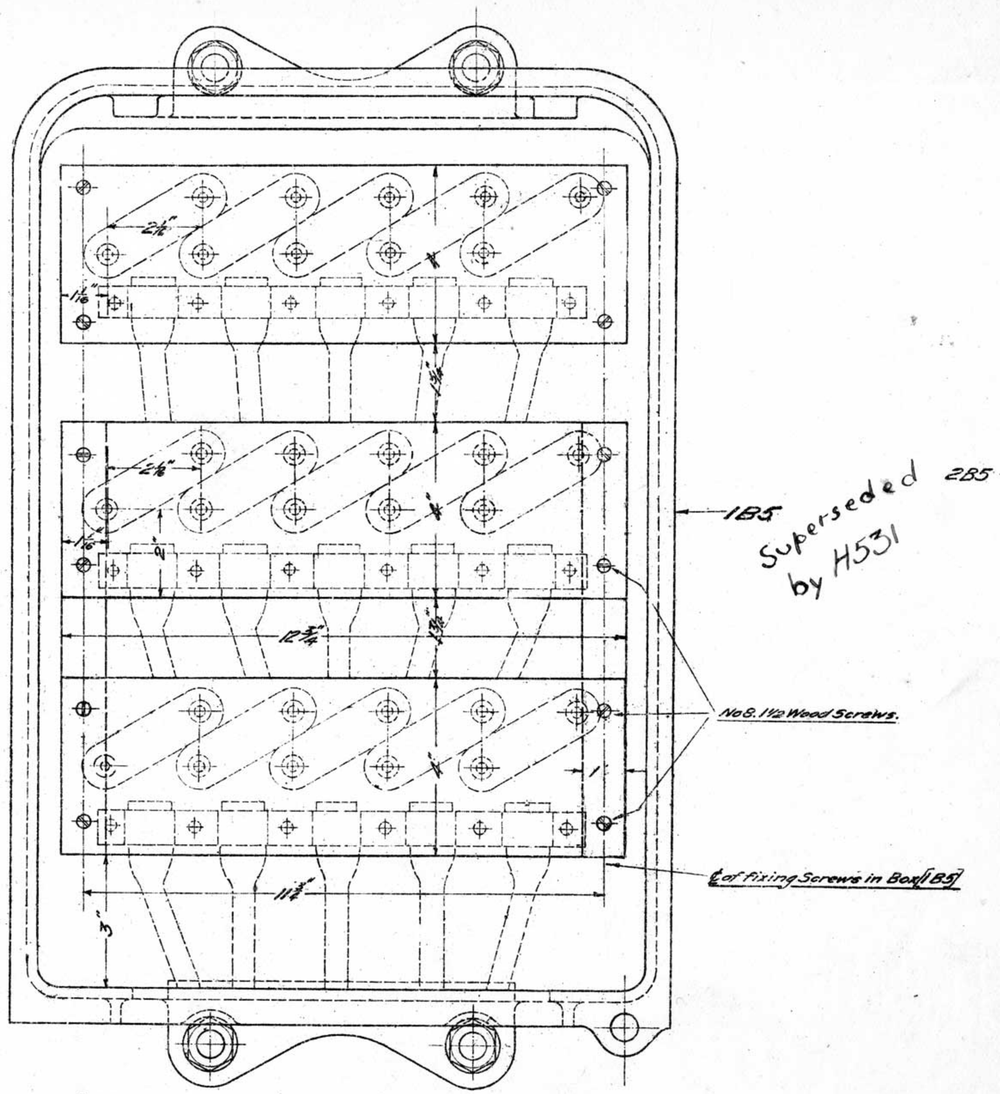

FRONT VIEW.
With cover removed.

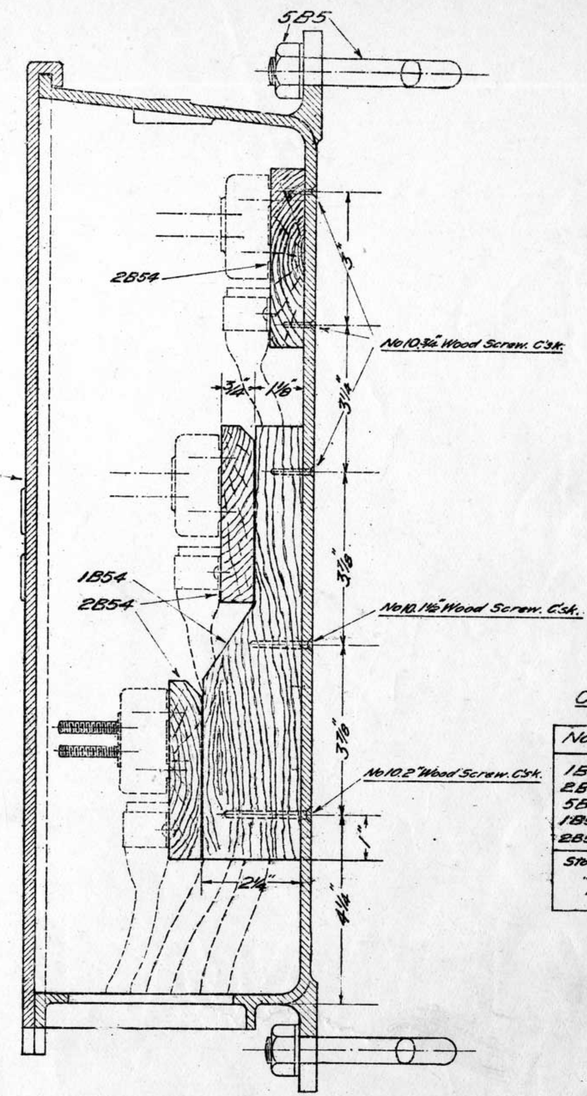

SIDE VIEW.
Section through Centre.

C.I. TERMINAL CASE COMPLETE 1B96.

No	NAME	MATERIAL	QUANTITY
1B5	Case	C.I.	1
2B5	Cover.		1
5B5	Hook Bolts.	M.S.	4
1B54	Supports.	Hardwood	2
2B54	Panels.	"	3
Stock	No 10. 3/4" Wood Screws.		6
"	No 10. 1 1/2" " "		10
"	No 10. 2" " "		2

2	5-12-17	1	31-8-17
	Part No 1B54 Previously 2B96		Length of Panels reduced from 13 1/2" to suit casting
	" 2B54 " 3B96		
	W.J.V.		S.C.O.

VICTORIAN RAILWAYS
C.I. TERMINAL BOX
15 WAY.
10.7.17.
Engineer of Signals.

Drawn by W.J.V.
Traced by V.J.V.

B96

L153/27

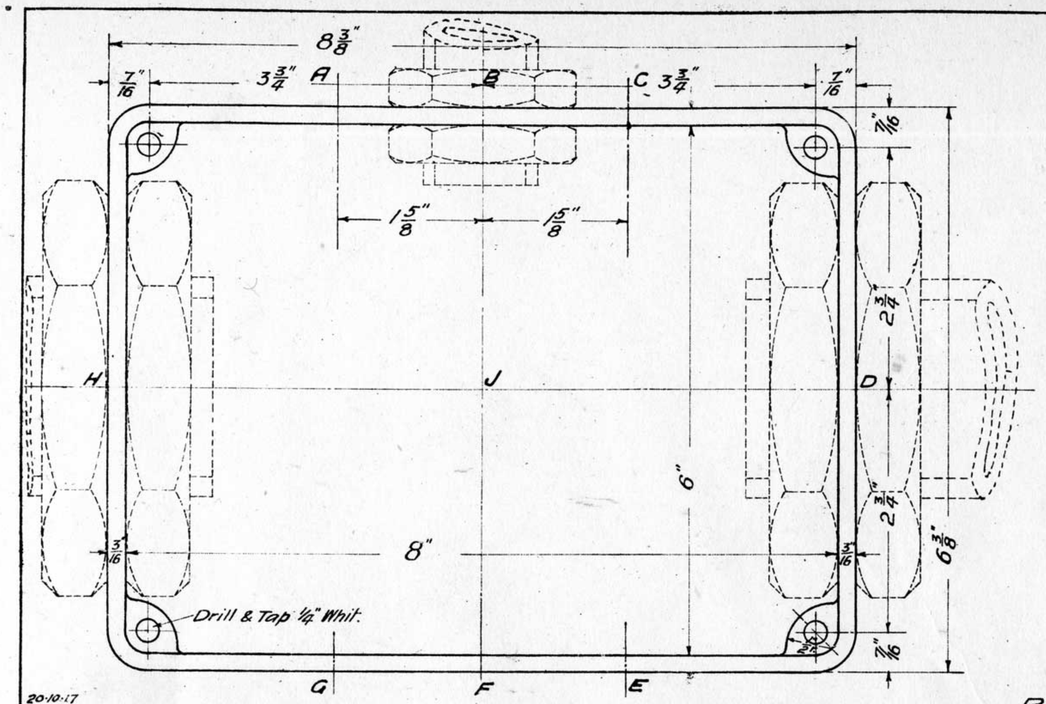

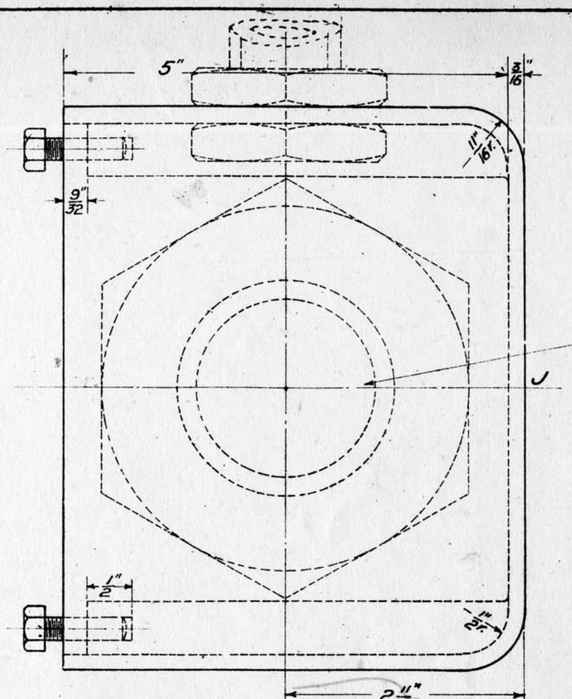

NOTE:- HOLES FOR PIPES TO BE DRILLED AS REQUIRED.

Location, as lettered & size of pipe to be stated when ordering.

20·10·17
15·8·17

-BOX-

2B115

To be lettered as shown on 4B115 only

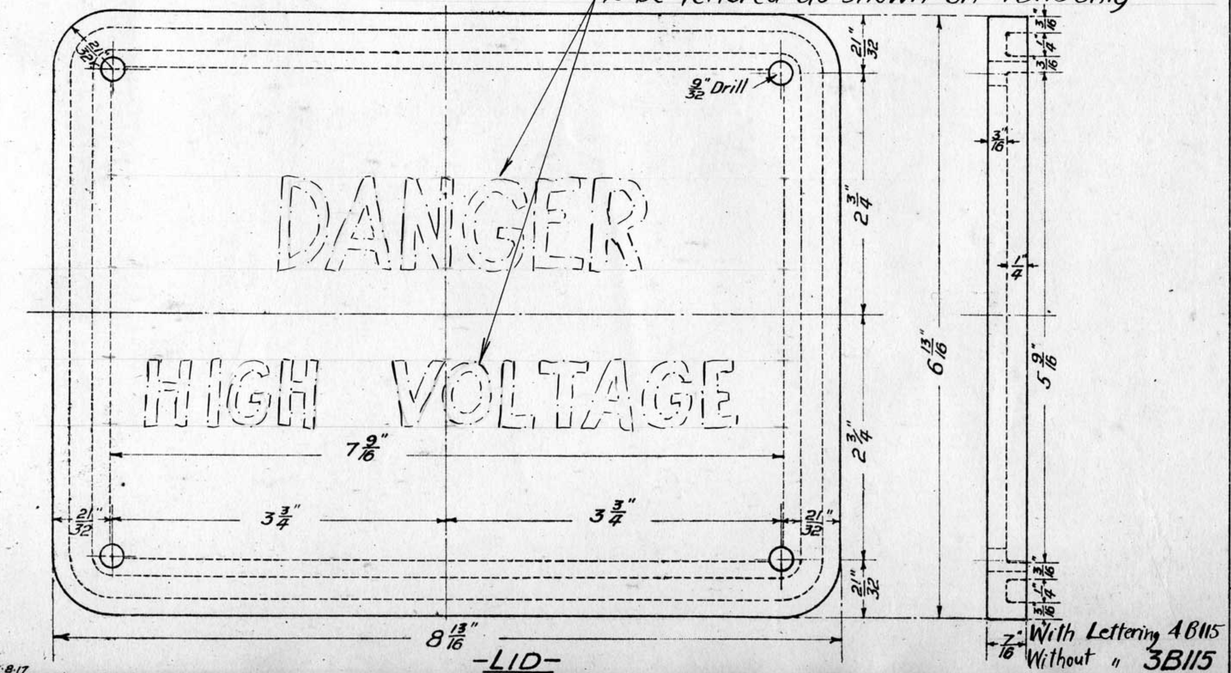

With Lettering 4B115
Without " 3B115

-LID-

Pipe Junction Box Complete with plain Cover 1B115.
" " " " " lettered " 5B115.
~~Pipe Junction Box Complete 1B115~~

No	NAME	Material	Quantity 1B115	Quantity 5B115
2B115	Box	C.I.	1	1
3B115	Lid	C.I.	1	—
Stock	Hexagonal Set Screws 1/4" Whit. 7/8" Steel		4	4
4B115	Lid	C.I.	—	1

Stores
Section _____
Item No _____

1-5-50 Parts List Bills added

1 20·10·17 Lettering for location of pipes added V.G.C.

VICTORIAN RAILWAYS
PIPE JUNCTION BOX
15·8·17
Engineer of Signals

Drawn by V.G.C.
Traced by V.G.C.

B115

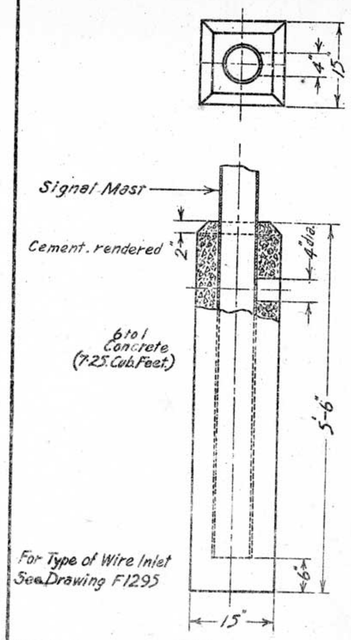

12-10-26 FOUNDATION 1B117

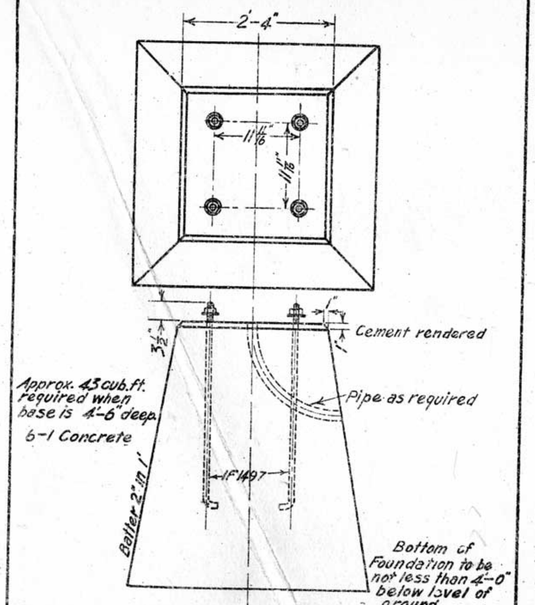

12-10-26, 3-5-21 alt 6 FOUNDATION 2B117

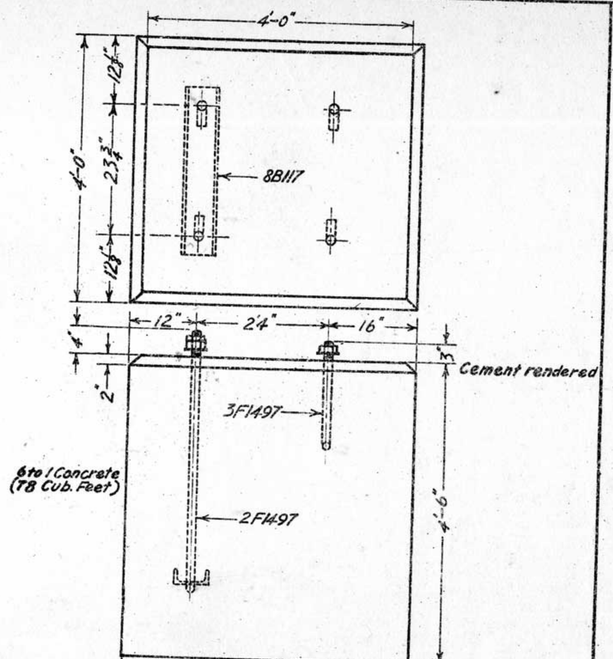

12-10-26 FOUNDATION 3B117

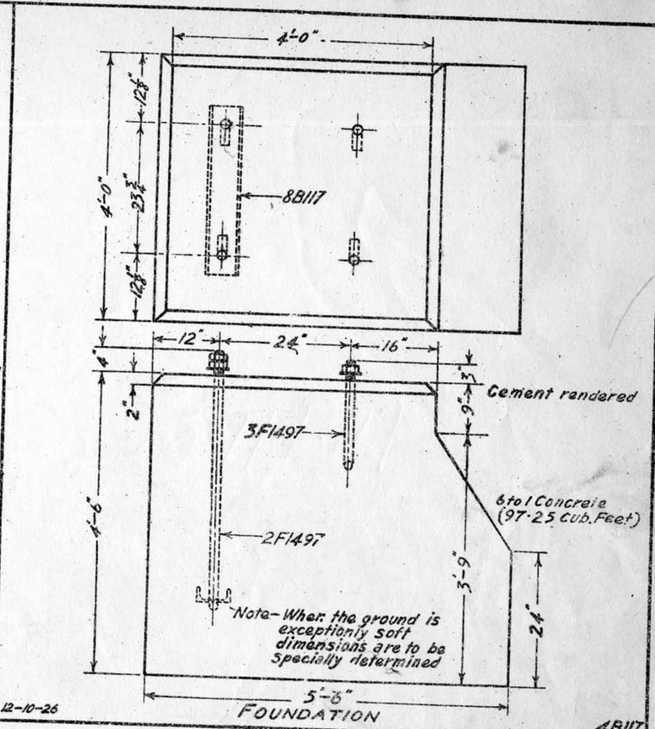

12-10-26 FOUNDATION 4B117

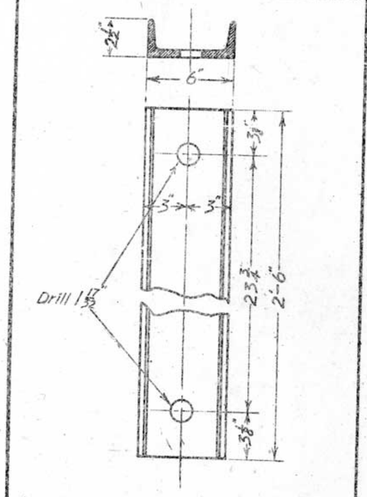

12-10-26 CHANNEL 8B117

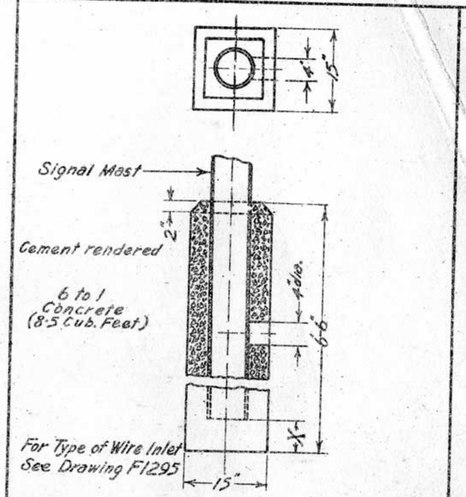

27-7-27, 12-10-26 FOUNDATION X = 18" 13B117 X = 6" 9B117

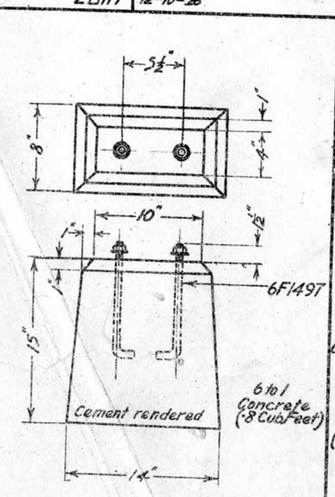

12-10-26 FOUNDATION 10B117

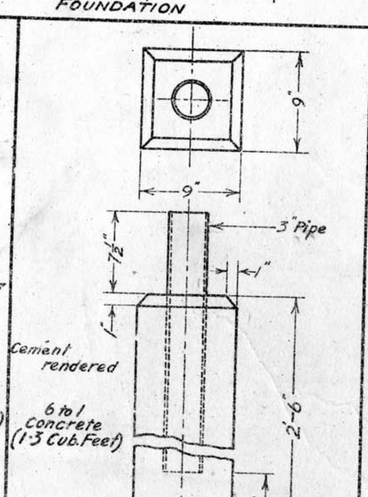

12-10-26 FOUNDATION 11B117

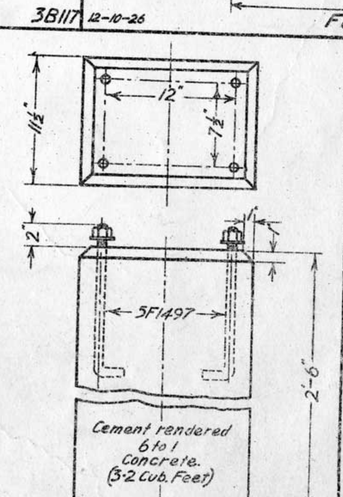

12-10-26 FOUNDATION 12B117

2	27-7-27	Part No 13B117 added
1		Redrawn. Original under same title dated. 30-8-17 Parts 11B117 & 12B117 added Part 3B117 transferred See 1F1497 " 6B117 " " 2F1497 " 7B117 " " 3F1497

VICTORIAN RAILWAYS

FOUNDATIONS FOR SIGNAL MASTS

Chief Engr. Signals & Telegs. | Drawn by V.G.C | Traced by C.W.F

12-10-26 B117

Stores
Section _____
Item Nº _____

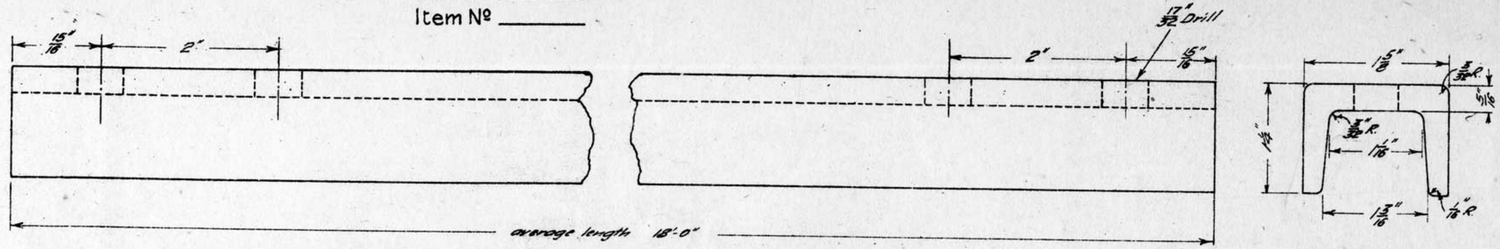

9-5-23/Alt.46
19-10-17

POINT RODDING

18134

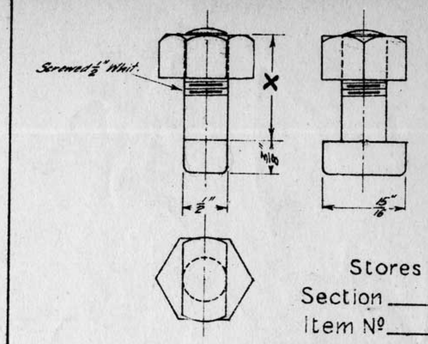

Stores
Section _____
Item Nº _____

19-10-17

BOLT

X - as specified - 5B134
X - 1 1/4" - 2B134

Stores
Section _____
Item Nº _____

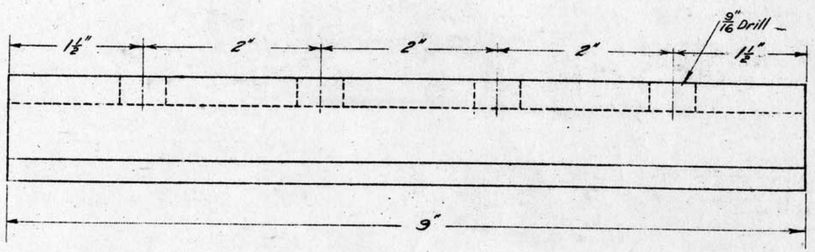

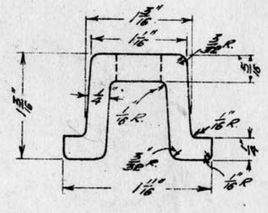

9-5-23/Alt.46
19-10-17

FISHPLATE

3B134

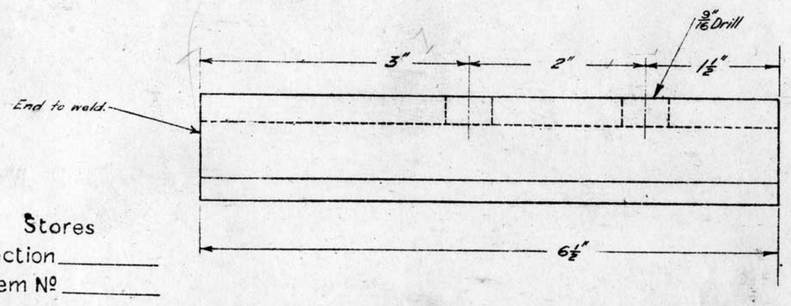

Stores
Section _____
Item Nº _____

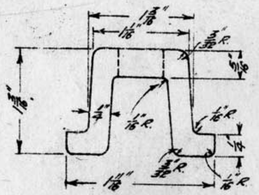

9-5-23/Alt.46
19-10-17

FISHPLATE END

4B134

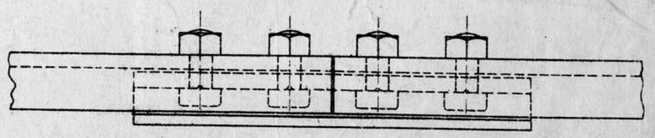

See blueprint for additions.

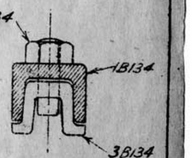

Stores
Section _____
Item Nº _____

9-5-23/Alt.46
11-1-19

CHANNEL & FISHPLATE JOINT
GENERAL ASSEMBLY

1 17-7-25 Part Nº 5,6,7,+8 B134 Added

9-5-23 Alteration Nº 46

VICTORIAN RAILWAYS
POINT RODDING & FISHPLATE
CHANNEL SECTION
19-10-17

Engineer of Signals

Drawn by J.C.D.
Traced by J.C.D.

B134

1B140	Time Release	attached	to	machine	timbers		operated	by	1 lever
2B140	"	"	"	"	"	"	"	"	2 "
3B140	"	"	"	"	wall		"	"	1 "
4B140	"	"	"	"	"		"	"	2

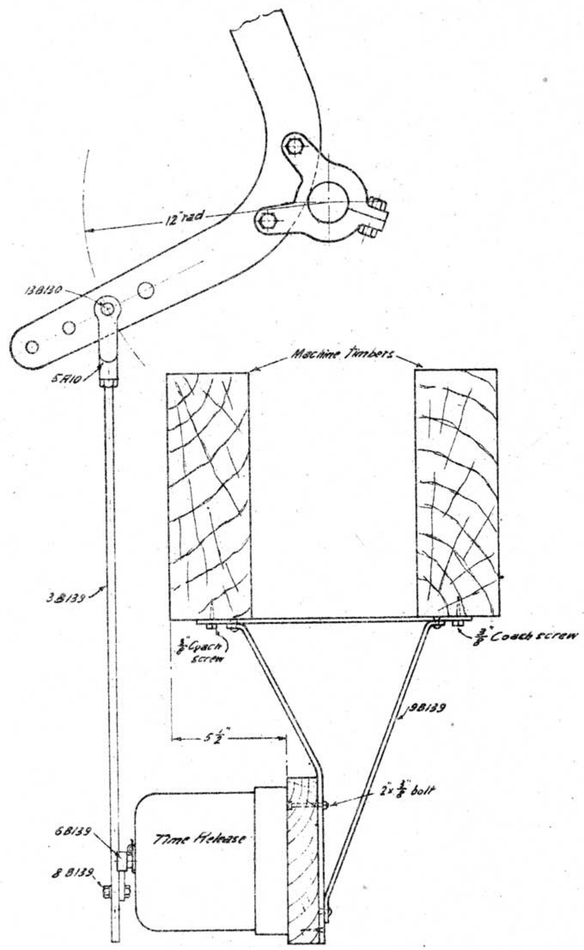

ASSEMBLY. 1B140

13-11-17

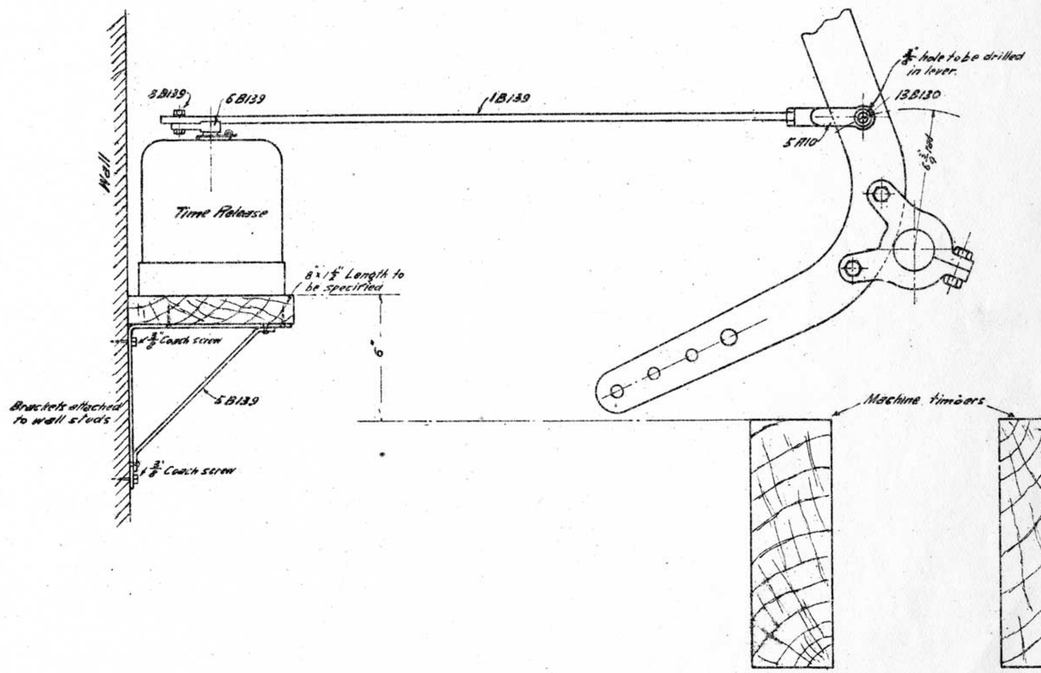

ASSEMBLY. 3B140

13-4-17

— G.R.S. TIME RELEASE —

—— OPERATED BY MECHANICAL LEVER ——

B140

L.168/28

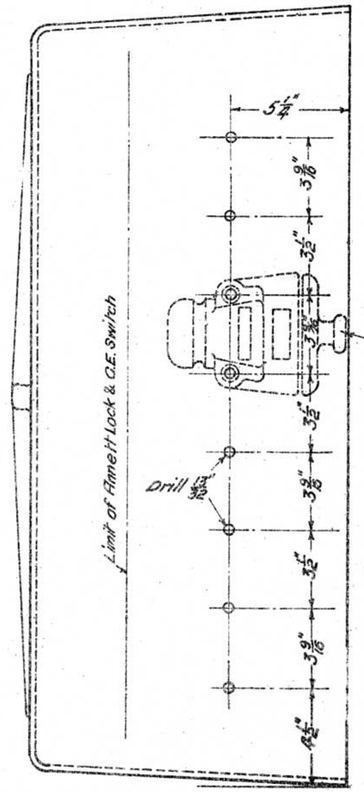
5¼"
3⅜"
3½"
3⅛"
3½"
3½"
3½

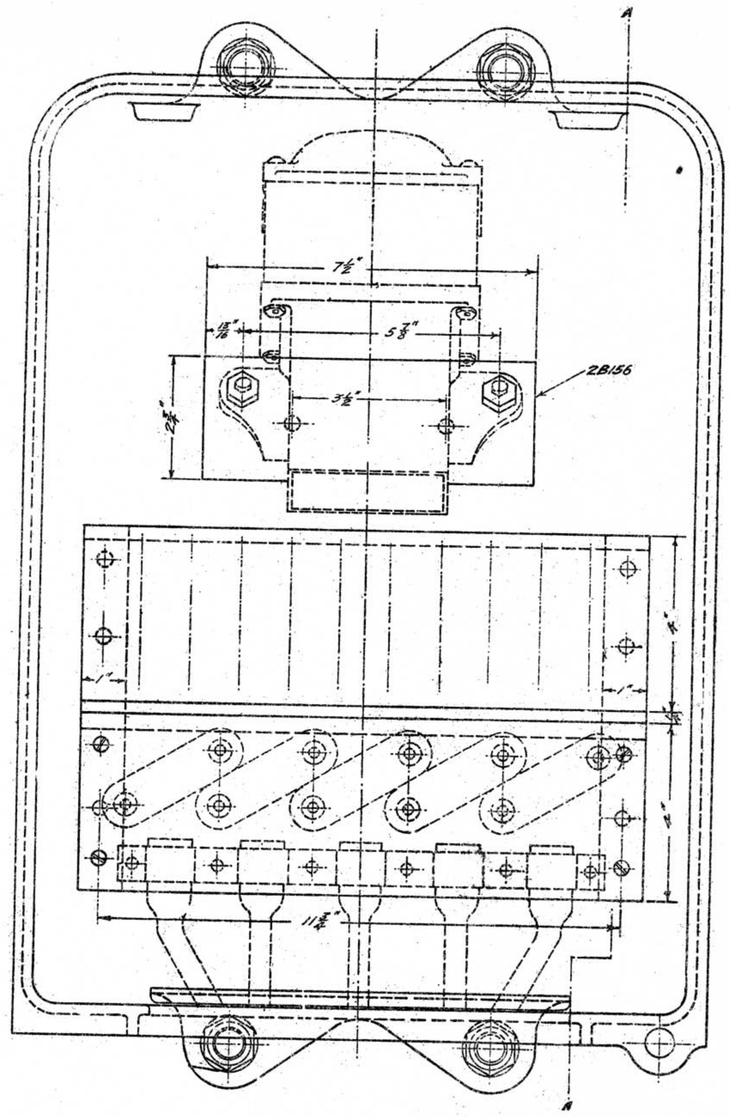

FRONT VIEW
Cover Removed

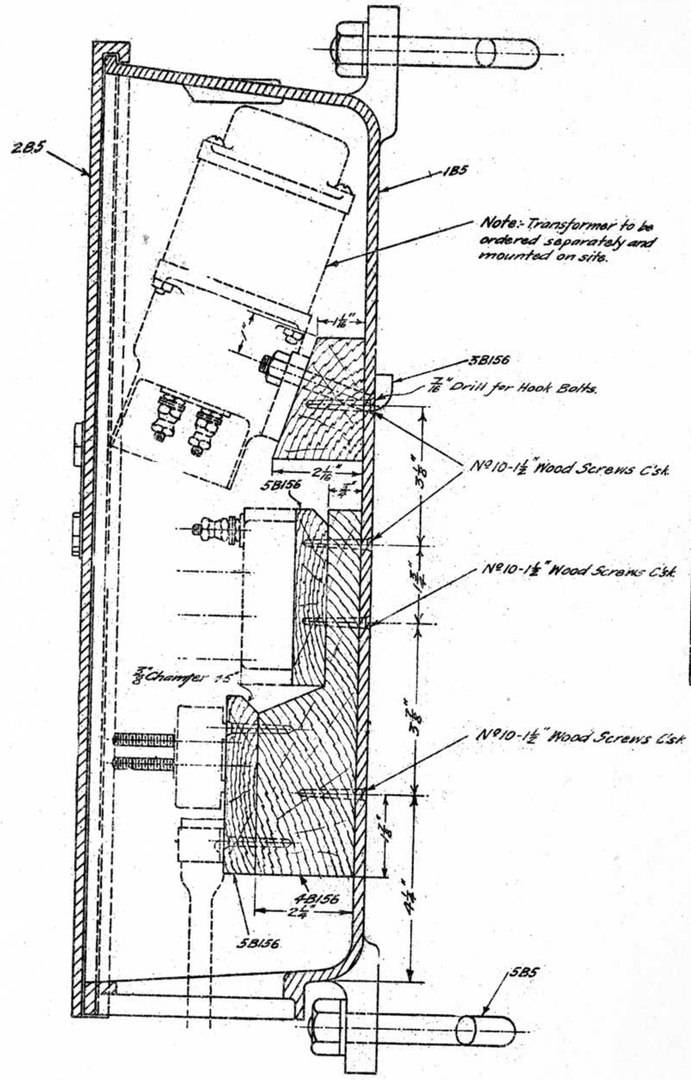

SECTIONAL SIDE VIEW
Section through AA

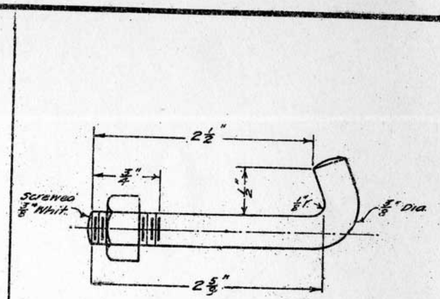

10-5-18 HOOK BOLT 3B156

CASE COMPLETE-1B156

No	Name	Material	Quantity
1B5	Case	C.I.	1
2B5	Cover		1
5B5	Hook Bolt	M.S.	4
2B156	Supporting Block	Hardwood	1
3B156	Hook Bolt	M.S.	2
4B156	Panel Support	Hardwood	2
5B156	Panel - 4"x1"x12⅜"	"	2
Stock	No 10 C'sk Wood Screws 1½" long		12

VICTORIAN RAILWAYS
C.I. CASE FOR
LIGHTING TRANSFORMER
10-5-18
Engineer of Signals.

Drawn by S.H.M.
Traced by S.H.M.

B156

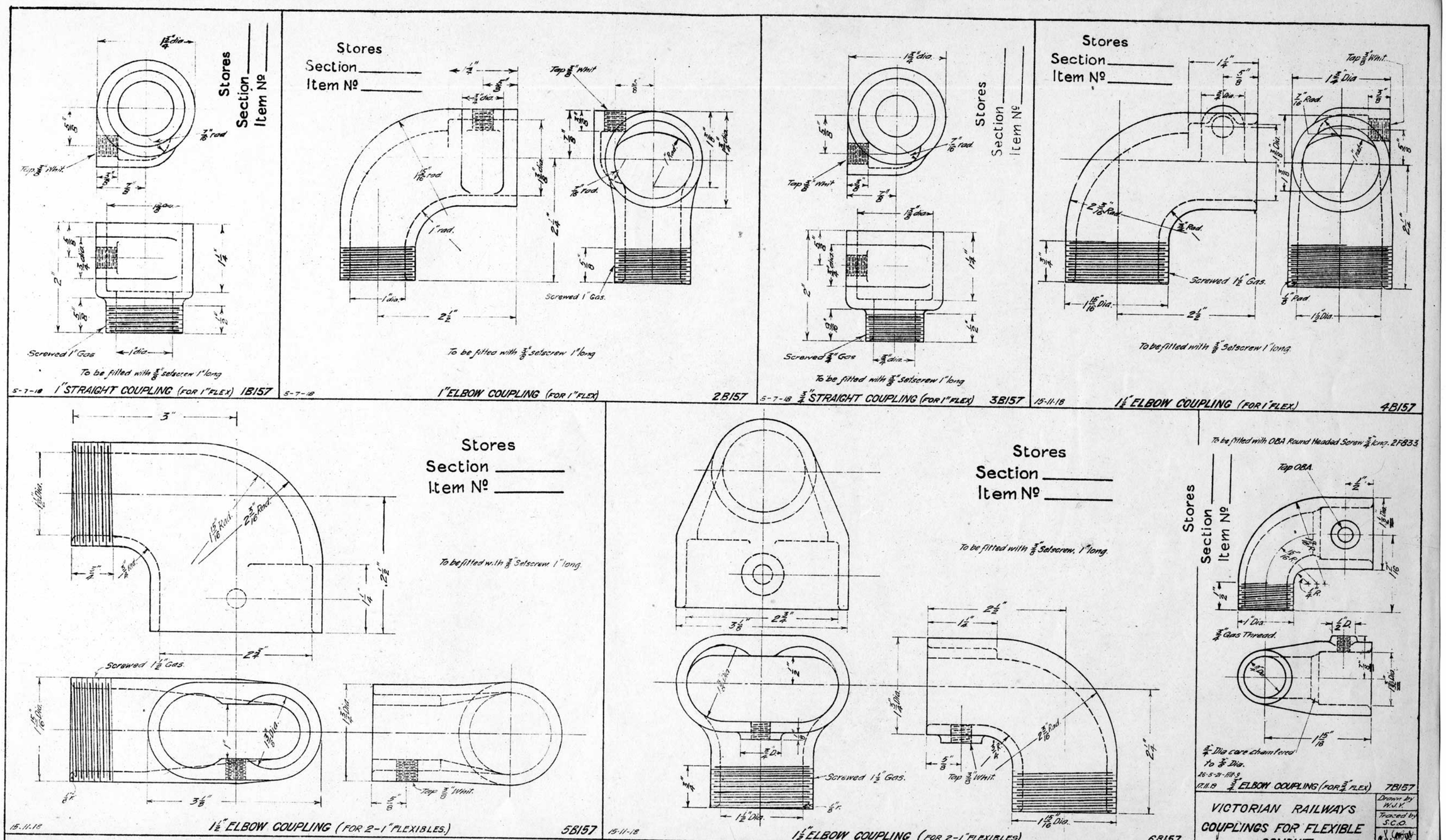

Stores
Section
Item No
Tap 3/8" Whit.
Screwed 1" Gas
To be fitted with 3/8" setscrew 1" long
5-7-18 1" STRAIGHT COUPLING (FOR 1" FLEX) 1B157
Tap 3/8" Whit.
Screwed 1" Gas.
To be fitted with 3/8" setscrew 1" long
5-7-18 1" ELBOW COUPLING (FOR 1" FLEX) 2B157
Tap 3/8" Whit.
Screwed 3/4" Gas
To be fitted with 3/8" setscrew 1" long
5-7-18 3/4" STRAIGHT COUPLING (FOR 1" FLEX) 3B157
Tap 3/8" Whit.
Screwed 1 1/2" Gas.
To be fitted with 3/8" Setscrew 1" long.
15-11-18 1 1/2" ELBOW COUPLING (FOR 1" FLEX.) 4B157
Screwed 1 1/2" Gas.
Tap 3/8" Whit.
To be fitted with 3/8" Setscrew 1" long.
15-11-18 1 1/2" ELBOW COUPLING (FOR 2-1" FLEXIBLES.) 5B157
Screwed 1 1/2" Gas.
Tap 3/8" Whit.
To be fitted with 3/8" Setscrew, 1" long.
15-11-18 1 1/2" ELBOW COUPLING (FOR 2-1" FLEXIBLES) 6B157
To be fitted with OBA Round Headed Screw 3/4" long. 2F833
Tap OBA.
3/4" Gas Thread.
3/4" Dia. core chamfered to 7/8" Dia.
26-5-21-FH-9
17.11.18 3/4" ELBOW COUPLING (FOR 3/4" FLEX) 7B157
Alteration No 9
2 17.11.19 Part No 7B157 added.
1 15-11-18 Parts 4B157, 5B157 & 6B157 added. Part 2B157 Radius modified.
W.J.V.
VICTORIAN RAILWAYS
COUPLINGS FOR FLEXIBLE CONDUIT
5-7-18
Drawn by W.J.V.
Traced by S.C.O.
Engineer of Signals
B157

— SINGLE —

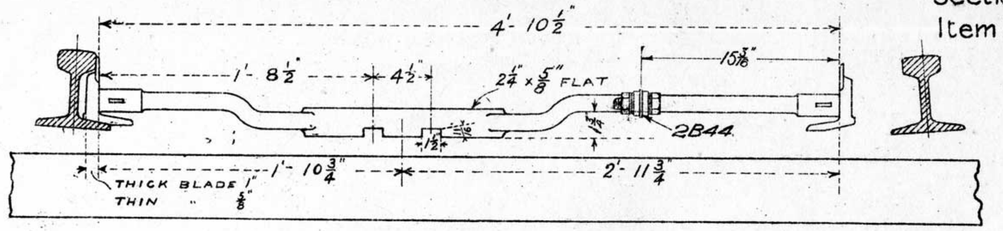

1B183. Non-Insulated
2B183. Insulated (2B44)

Stores
Section
Item Nº

— COMPOUND —

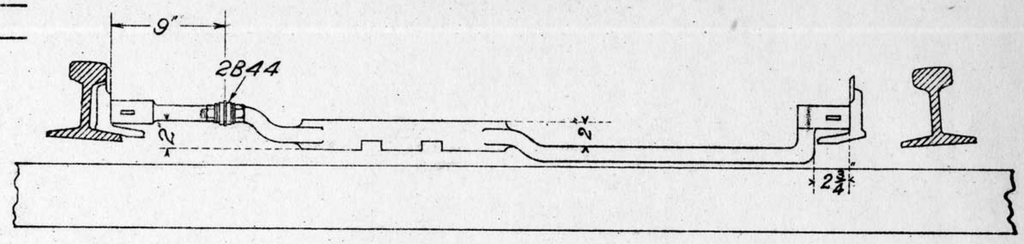

3B183. Non Insulated
4B183. Insulated (2B44)

— 100 LBS RAILS —

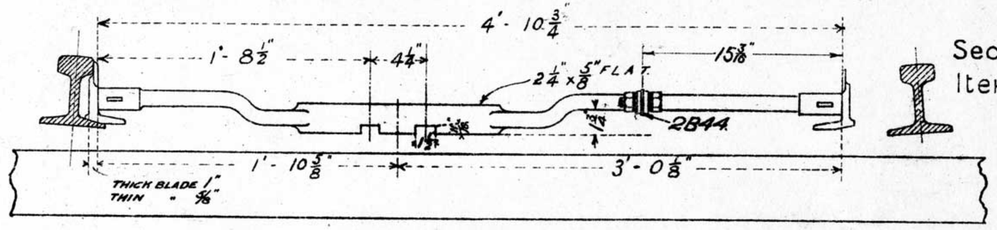

5B183. Non Insulated
6B183. Insulated (2B44)

Stores
Section
Item Nº

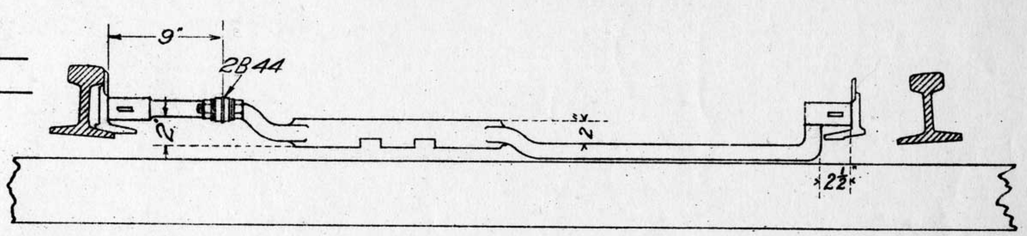

7B183. Non Insulated
8B183. Insulated (2B44).

— 80 LBS RAILS —

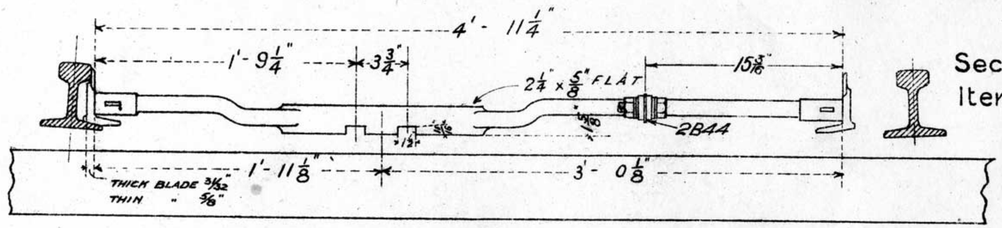

9B183. Non Insulated
10B183 Insulated (2B44)

Stores
Section
Item Nº

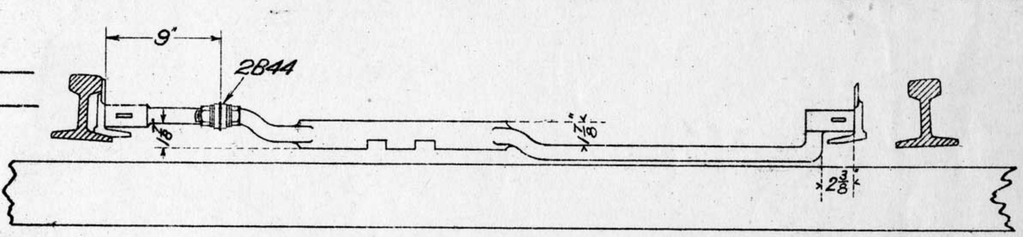

11B183. Non Insulated
12B183. Insulated (2B44)

— 75 LBS RAILS —

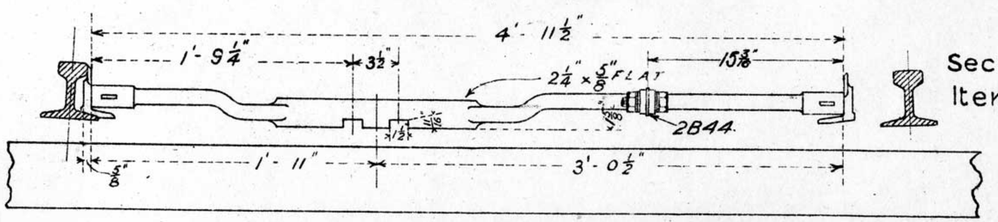

13B183. Non Insulated
14B183. Insulated (2B44)

Stores
Section
Item Nº

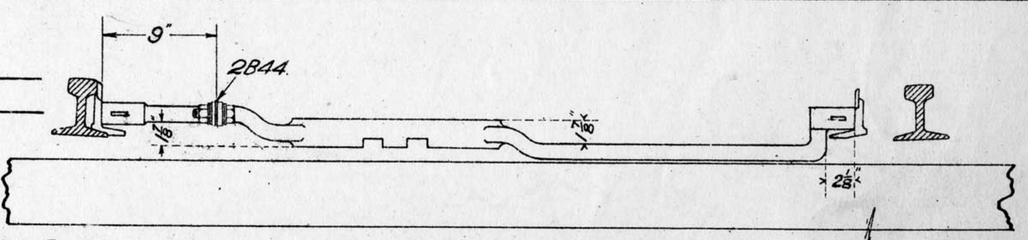

15B183. Non Insulated
16B183. Insulated (2B44)

— 66 & 60 LBS RAILS —

— STRETCHER BARS FOR NEW PATTERN PLUNGER —

Note:- When ordering state whether for Thick or Thin Blades.

5/7/12.

B183

—V A—

— BLOCKS FOR INSULATED JOINTS ON FLINDERS ST VIADUCT —

— 100 lb. "P" class rails with 100 lb. "M" class check rail —

Note: This dimension has been altered to 2¼" because Rad. of Curve has been altered from 9 chs. to 13 chs. 15.5.18.

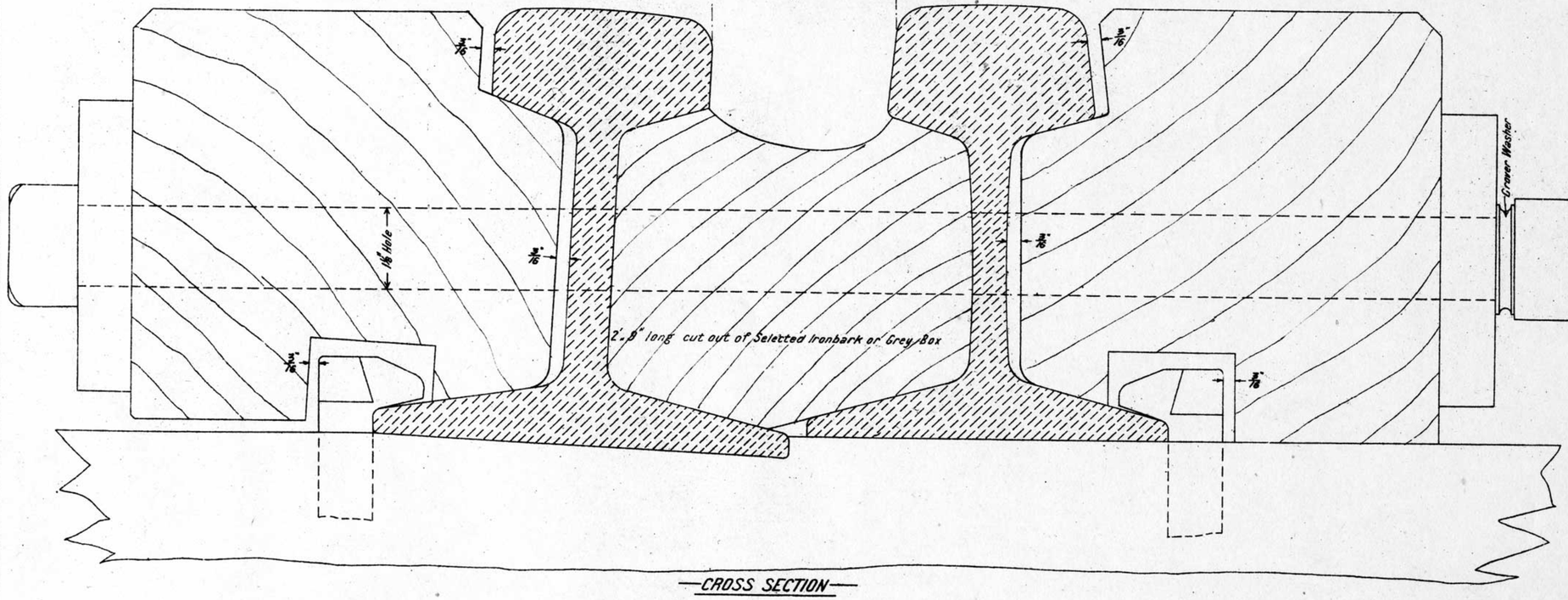

— CROSS SECTION —

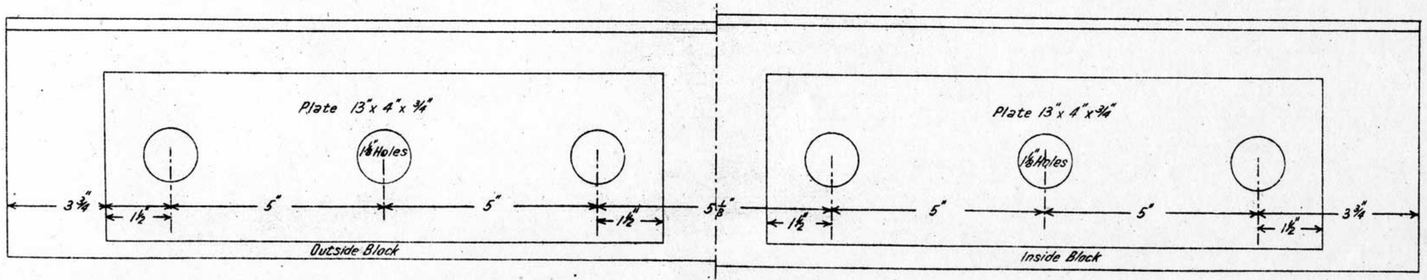

— SIDE ELEVATION —

L.329/23

746.23

B201

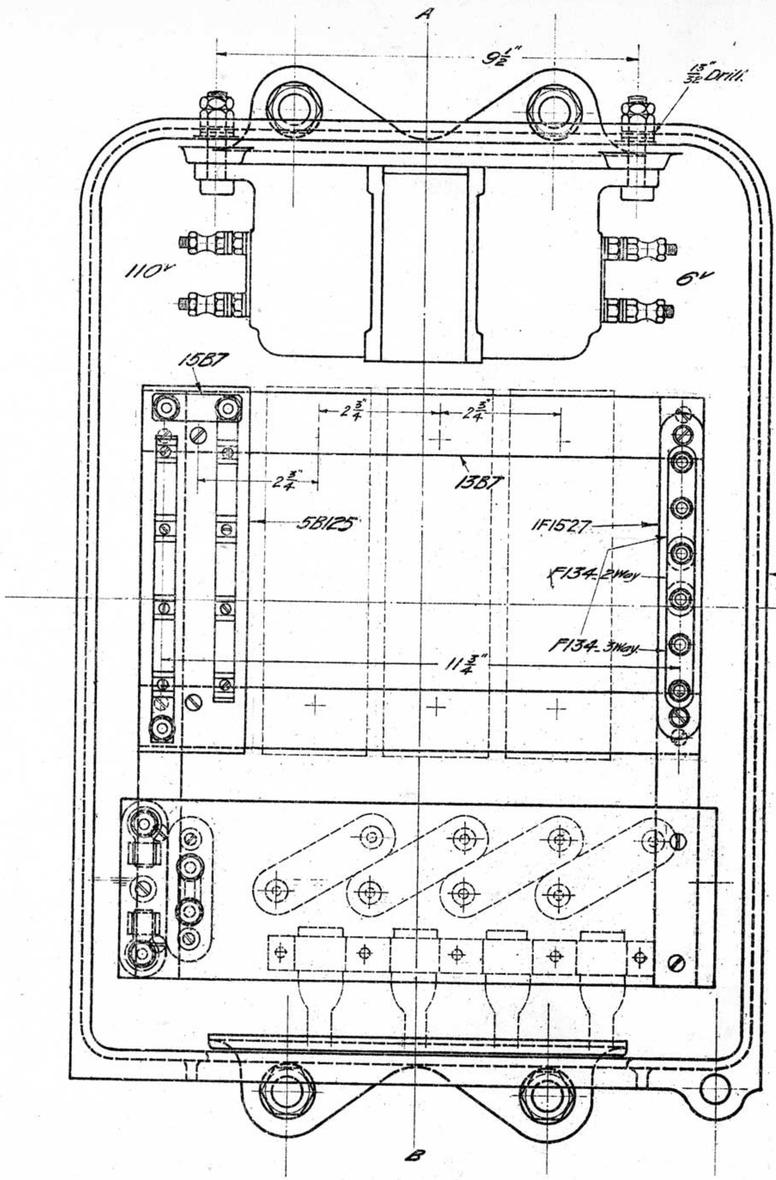

FRONT VIEW.

Cover removed.

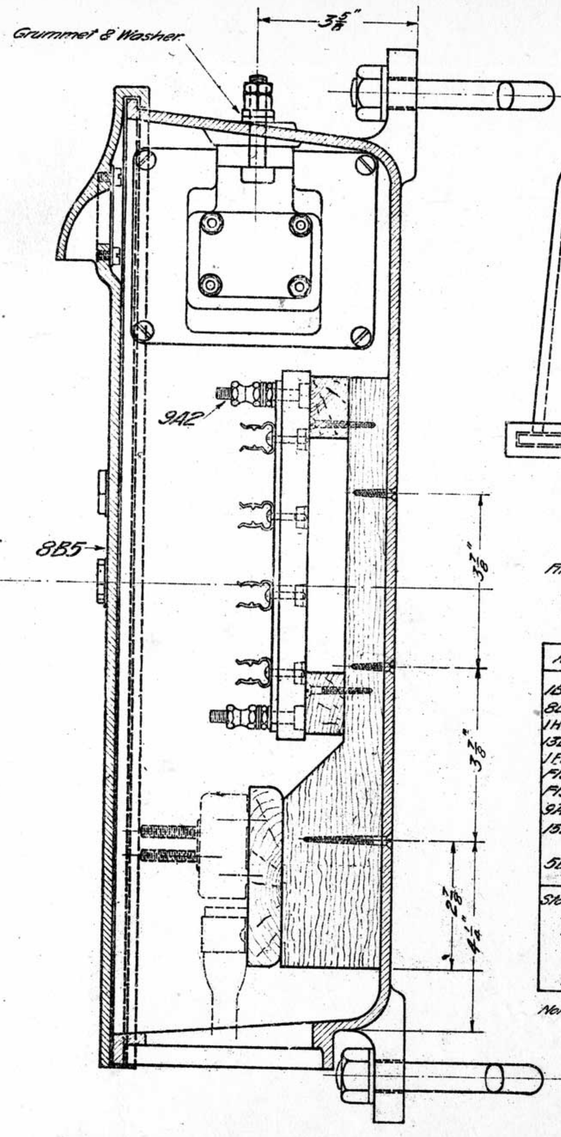

SECTION ON A.B.

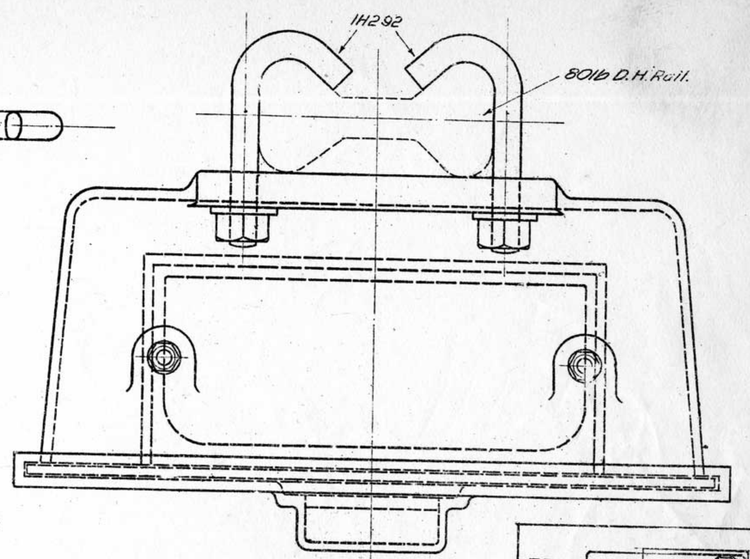

110v TRACK FEED BOX COMPLETE.

Fitted with 1 Thermal Regulator Unit. 1B125
" " 2 " " Units 2B125
" " 3 " " " 3B125
" " 4 " " " 4B125

NO	NAME	MATERIAL	QUANTITY
1B5	Case.	C.I.	1
8B5	Cover.	"	1
1H292	Hook Bolts. X = 4". Y = 1¾"	M.S.	4
13B7	Panel Support.	Shellaced Wood	1
1F1527	Terminal Block (complete)	—	1
F134	Connector - 3 Way.	Brass.	2
F134	Connector - 2 Way.	"	1
9A2	Binding Post.	"	1
15B7	Connector.	"	1
5B125	Thermal Regulator Panel.	-	As Ordered.
Stock	1½" x ⅜" Bolt & Lock Nut.	M.S.	2
"	No.10 1½" Round Head Wood Screw.	Brass.	3
"	" " 1" C'sk Wood Screws.	Iron.	4
"	" " 1¾" " " "	"	2
	Grummet & Washer.		2
"	No.10-1½" Round Hd Wood Screws	Brass	2

Note. 110v-6v Transformer will be ordered as required.

Parts 1234.
Superseded by
H631

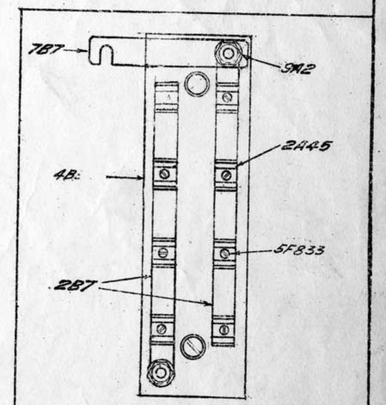

NO	NAME	MATERIAL	QUANTITY
4B382	Regulator Panel.	Porcelain	1
2B7	Clip Base.	Brass	2
2A45	Regulator Clip.	Ph. Bronz	8
9A2	Binding Post.	Brass	2
5F833	Screw No.3 B.R.-1" long - Screw Hd ⅜"	Brass	6
Stock	Eyelet Rivets. (4⅜" Sq. nuts)		8
Supply	1½" No.10-Round Hd Wood Screws	Brass	2
7B7	Connector.	Brass	1

Note Part No. 7B7 will not be supplied with first Panel fitted.

5.6.18 THERMAL REGULATOR PANEL 5B125

VICTORIAN RAILWAYS.
110v TRACK FEED BOX.
GENERAL ASSEMBLY.

Drawn by W.J.V.
Traced by W.J.V.

Alteration No. 13
27-6-21

Redrawn. 2.6.18
Fittings rearranged and Terminal Panel added. Assembly previously shown on Drawings B5 (Dated 15.11.15) and B125 (Dated 2.11.17.)

B.6.13
Engineer of Signals.

B125

L.163/27

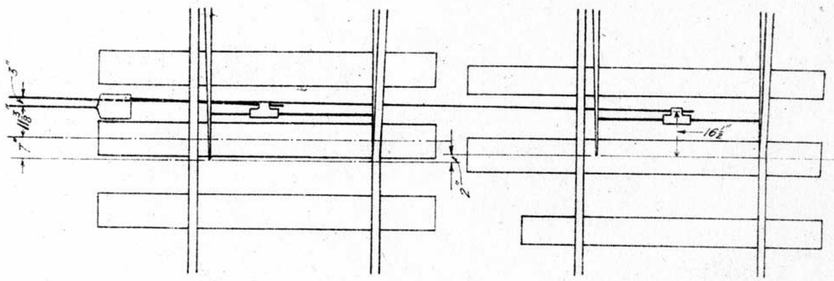

Facing Point.
Class Y Layout.

Trailing Point.
Class X Layout.

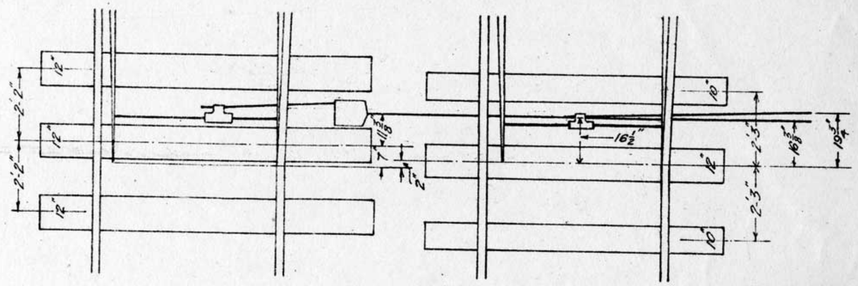

Facing Point.
Class Y Layout.

Trailing Point.
Class X Layout.

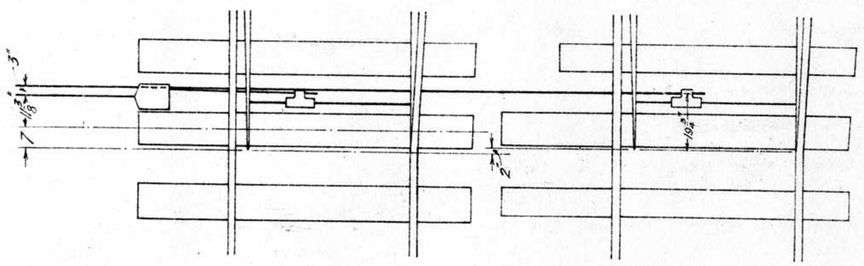

Facing Point
Class Y Layout.

Trailing Point.
Class Y Layout.

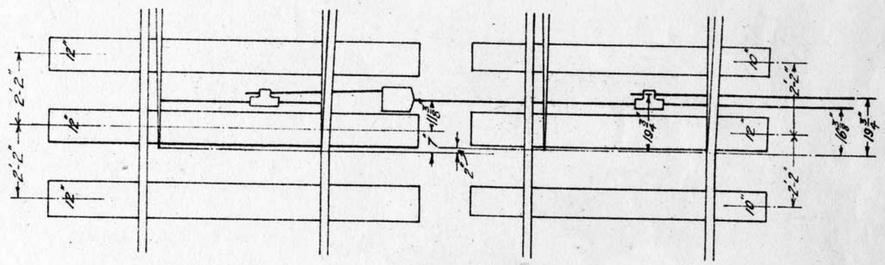

Facing Point.
Class Y Layout.

Trailing Point.
Class Y Layout.

NOTE:- The Trailing Points may be either level with, or 4" ahead of the Facing Points.
Drawing shows mean position - 2" ahead.

L.329/23

VICTORIAN RAILWAYS.
ARRANGEMENT OF POINT LAYOUT AT JUNCTION.
27-2-19

Drawn by W.J.V.
Traced by W.J.V.

B251

Engineer of Signals.

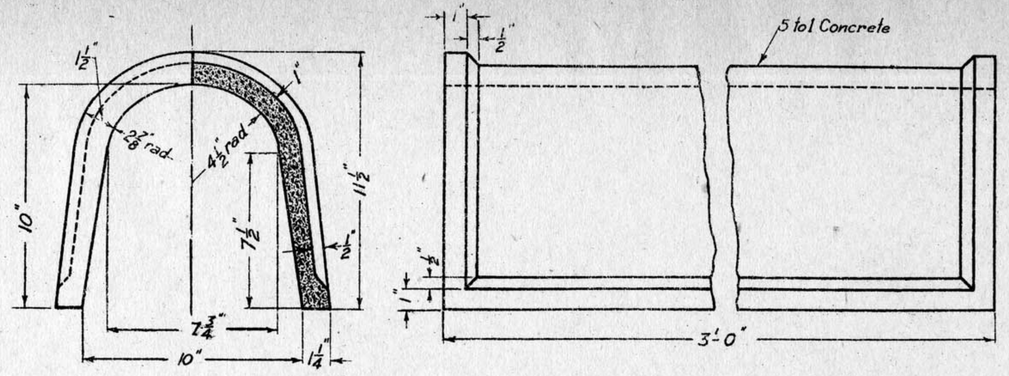

Concrete
COVER

4-2-27

1B253

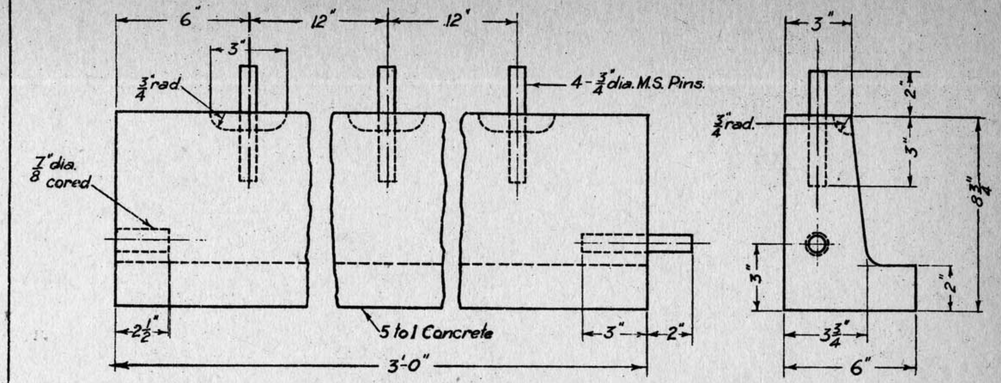

Concrete
SIDE SUPPORT

4-2-27

3B253

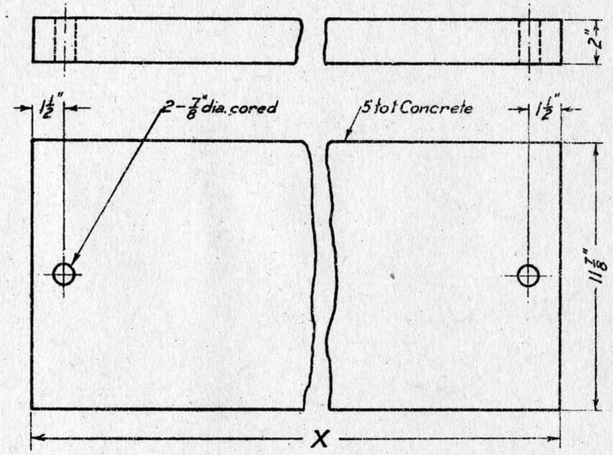

Concrete
TOP COVER

"X" as ordered **2B253**

4-2-27

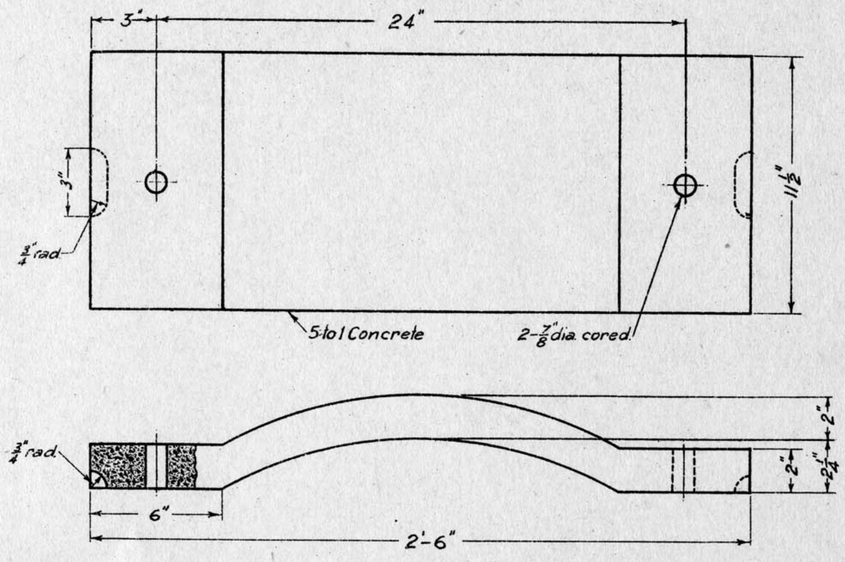

Concrete
COVER

10-10-29/Alt 207.
4-2-27

4B253

INFORMATION FOR ORDERING

1B253	Cover for Single Leads	1 off	per 3'-0" of run
※2B253	" " 2 or more Leads ("X" to be stated)	3 off	per 3'-0" of run
3B253	Support for 2 or more Leads	2 off	per run
4B253	Cover " Transverse "	5 off	per run

※2B253 For 2 way X = 18"
4 " X = 24"
6 " X = 2'-6"
8 " X = 3'-0"
10 " X = 3'-6"
12 " X = 4'-0"

Redrawn & Part Nos revised Design of 3B253 & 4B253 modified.
Original under same title & No dated 24-1-19.

VICTORIAN RAILWAYS
COVERS
FOR ROD AND WIRE LEADS
4-2-27

Chief Eng. Sigs. & Tels.	Drawn by	Traced by
	L.J.P.	L.J.P.

B 253

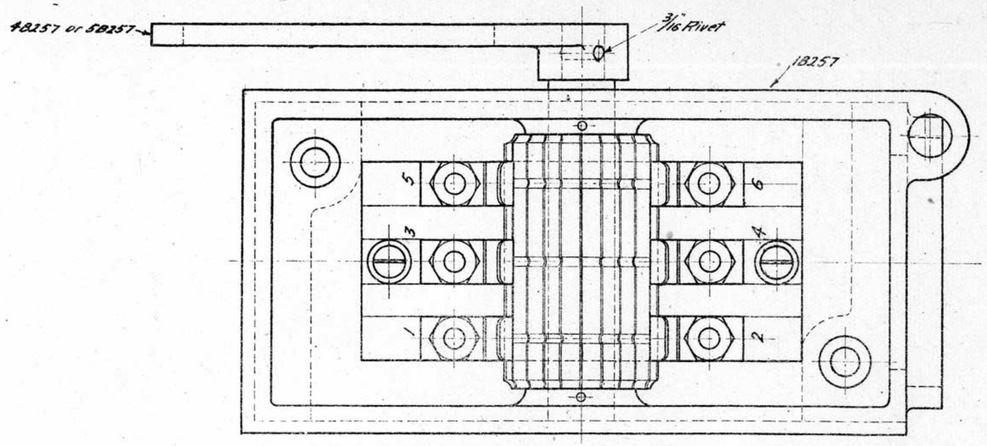

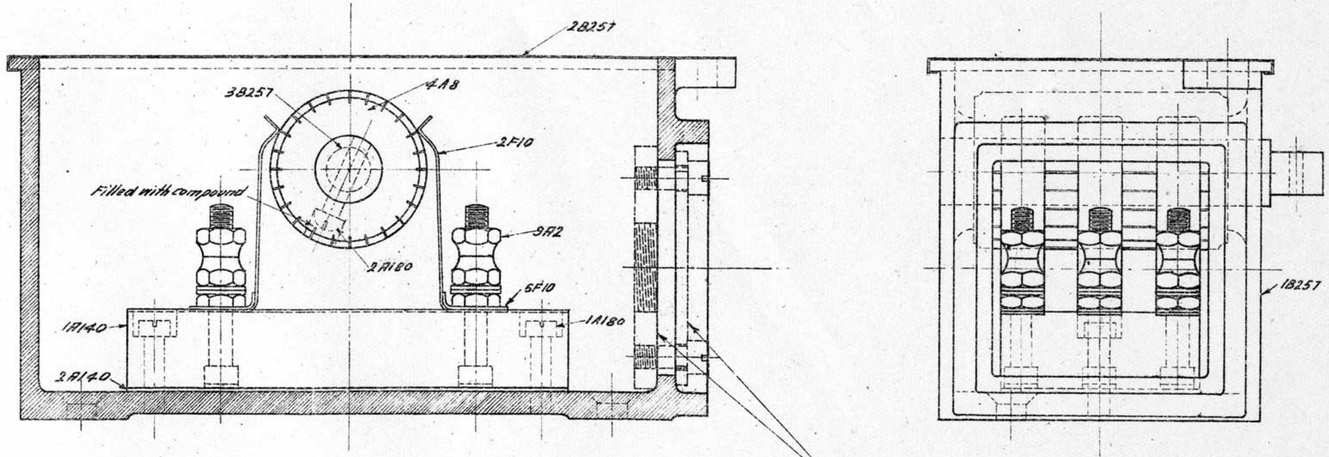

NOTE:- When 3/4" Pipe is used order Plate 12B257
" 1" " " " " " 11B257
" 1½" " " " " " 10B257

Combinations			
Nº	For Signal	Nº	For Interlocking Lever
1B256	As Circuit Controller	3B256	As Circuit Controller
2B256	" " " & Pole Changer	4B256	" " " & Pole Changer
5B256	Repeater (Pole-Changer)		

List of Parts			Quantity				
Nº	Name	Material	1B256	2B256	3B256	4B256	5B256
1B257	Case	C.I.	1	1	1	1	1
2B257	Cover	Sheet I	1	1	1	1	1
3B257	Shaft	M.S.	1	1	1	1	1
4B257	Slotted Arm	Brass	1	1			1
5B257	Arm	"			1	1	
9A2	Binding Post	Brass	6	6	5	6	4
4A8	Contact Roller	Imp. Wood	1	1	1	1	1
2A69	Contact Bands	Phos. Bronze	3	1	3	1	
8A69	" "			1		1	
9A69	" "			1		1	
1A140	Insulating Base	Imp. Grey Fibre	1	1	1	1	1
2A140	Sole Plate	"	1	1	1	1	1
2F10	Contact Springs	Phos. Bronze	6	6	6	6	4
6F10	" " Keeper.	"	6	6	6	6	4
1A180	Screw- 1/4" Whit - 1" long - screwed 1/2"	M.S.	2	2	2	2	2
2A180	Screw- 2BA- 3/4" long-	"	1	1	1	1	1
10A69	Contact Bands						1
11A69	" "						1

Note:-
Pole Changer contacts when filled to be applied to springs 1-2-3 & 4.

Stores
Section _____
Item Nº _____

2495.19

10·3·23 Alteration Nº 45.	1 3·11·22 Material List 5B256 added.	VICTORIAN RAILWAYS CIRCUIT CONTROLLER 3 WAY ASSEMBLY	Engineer of Signals	Drawn by A.H.S.
			24-3-19	B256

B323

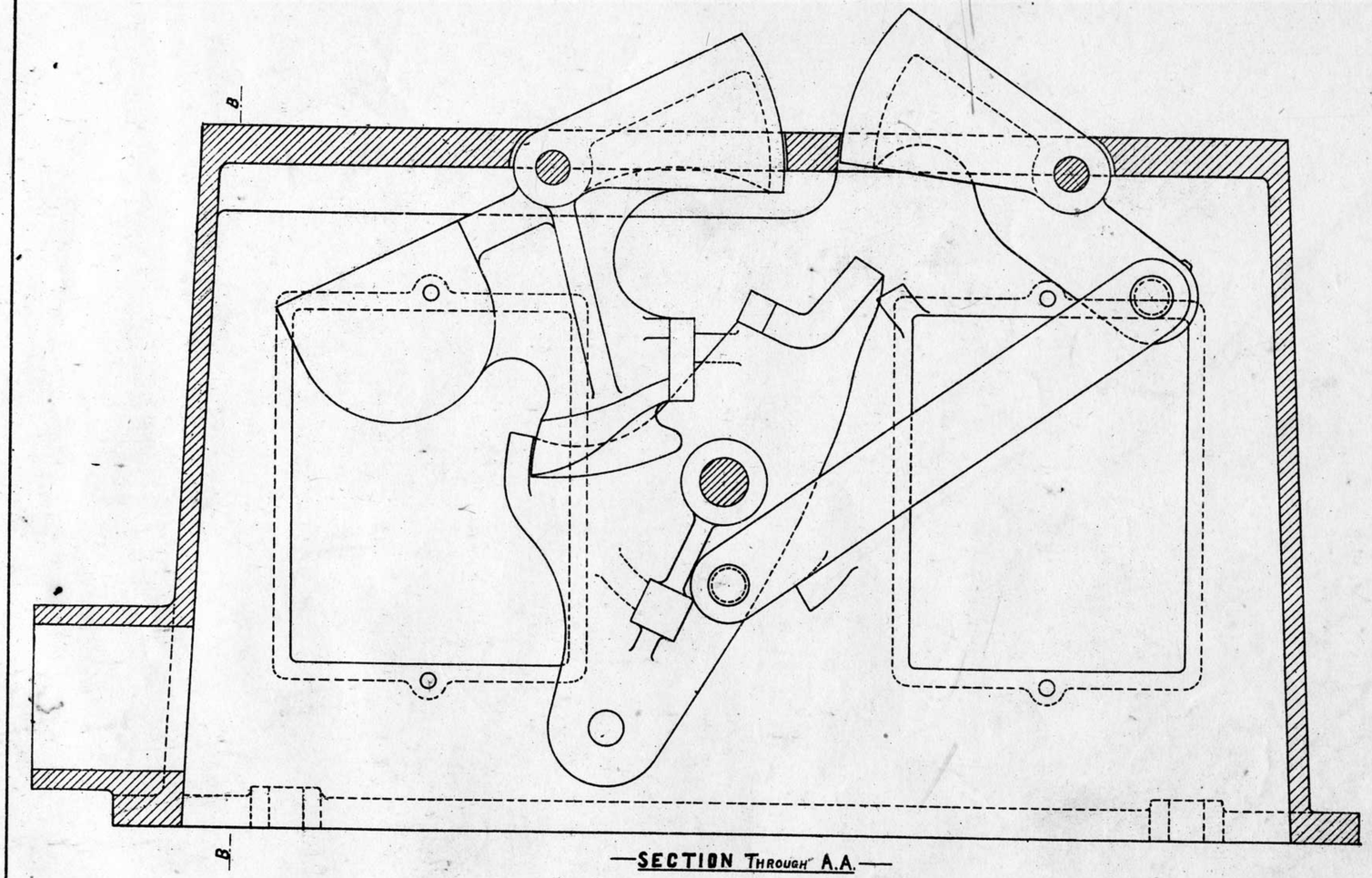

—SECTION THROUGH A.A.—

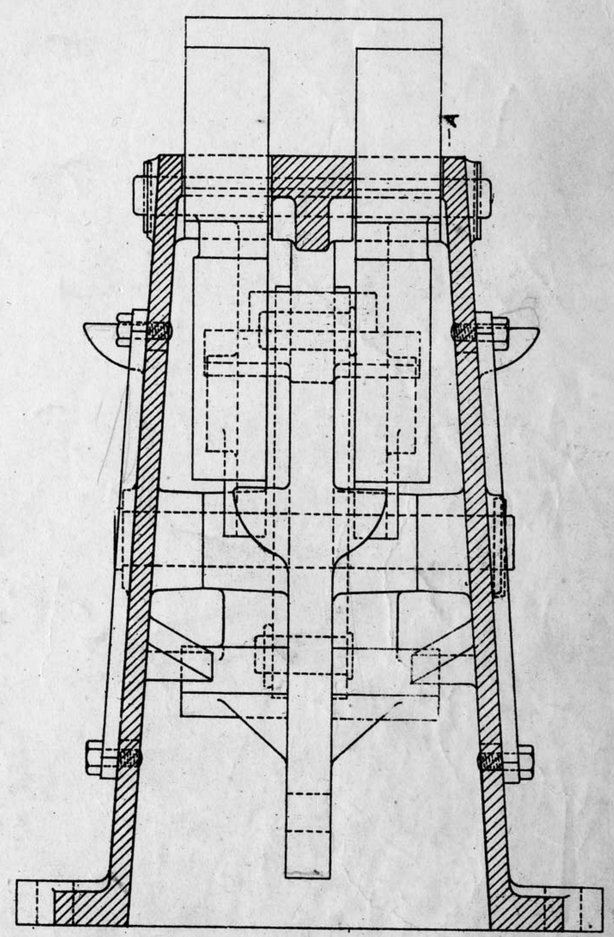

—SECTION THROUGH B.B.—

Stores
Section _____
Item No _____

V. R.
—GATE STOP—TYPE "A"—

B301

31.2.3.15

L.329/23

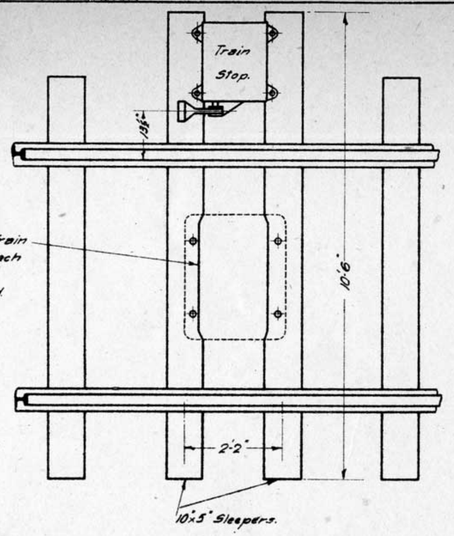

Note—
Where Impedance Bond & Train Stop are located together, each sleeper to be checked out.
⅝ for G.R.S Impedance Bond.
1" Weymouth

15-6-28

LAYOUT OF G.R.S. TRAIN STOP.

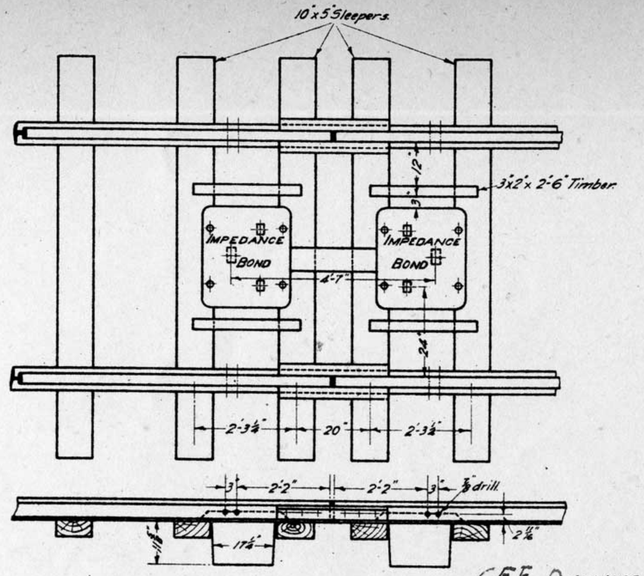

15-6-28

LAYOUT OF G.R.S. IMPEDANCE BONDS.

CEE Drawing Q1810A Type 4

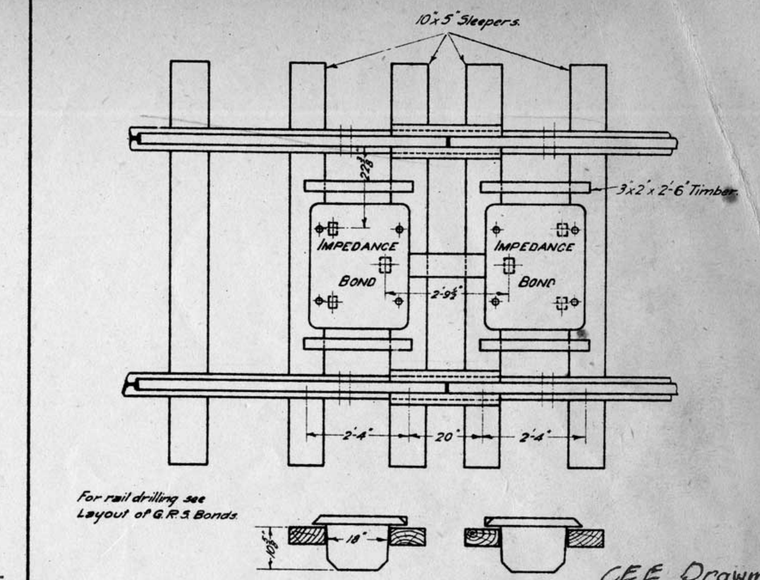

15-6-28

LAYOUT OF WEYMOUTH IMPEDANCE BONDS.

CEE Drawing Q18dia Type 1, 2, 43.

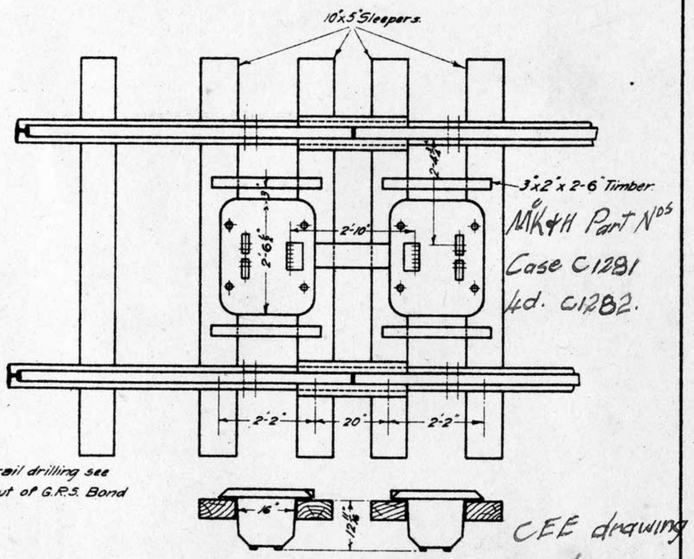

CEE drawing Q1810 Type 6.

15-6-28

LAYOUT OF McKENZIE & HOLLAND IMPEDANCE BONDS.

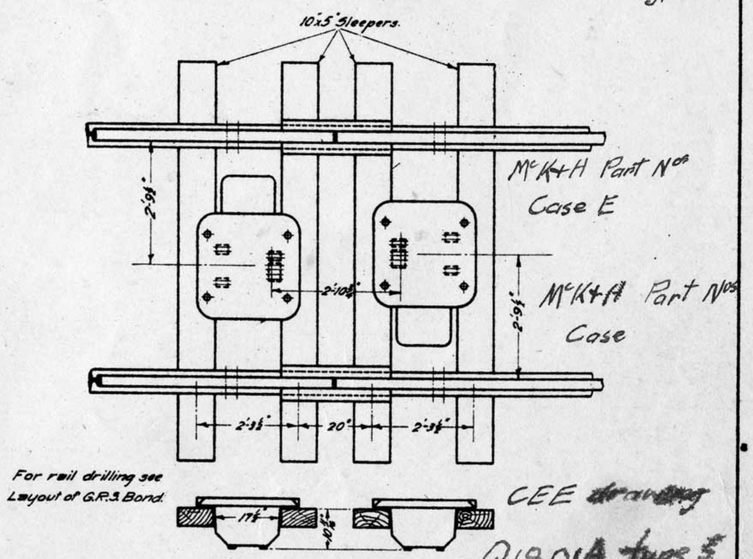

CEE drawing Q1801A Type 5

15-6-28

LAYOUT OF McK&H STYLE 'K' RESONATED IMPEDANCE BONDS.

2	16-4-46	Alteration No 614	1	30-11-42	McK+H & CEE Part Nos Added.	REDRAWN. McK&H. STYLE 'K' RESONATED BOND ADDED. PART NUMBERS DELETED. ORIGINAL DATED 2-9-19.	VICTORIAN RAILWAYS. LAYOUT OF IMPEDANCE BONDS & TRAIN STOP. 15-6-28

CHIEF ENG. SIGS & TELS.	DRAWN BY R.P.M.	TRACED BY W.E.E.

B332

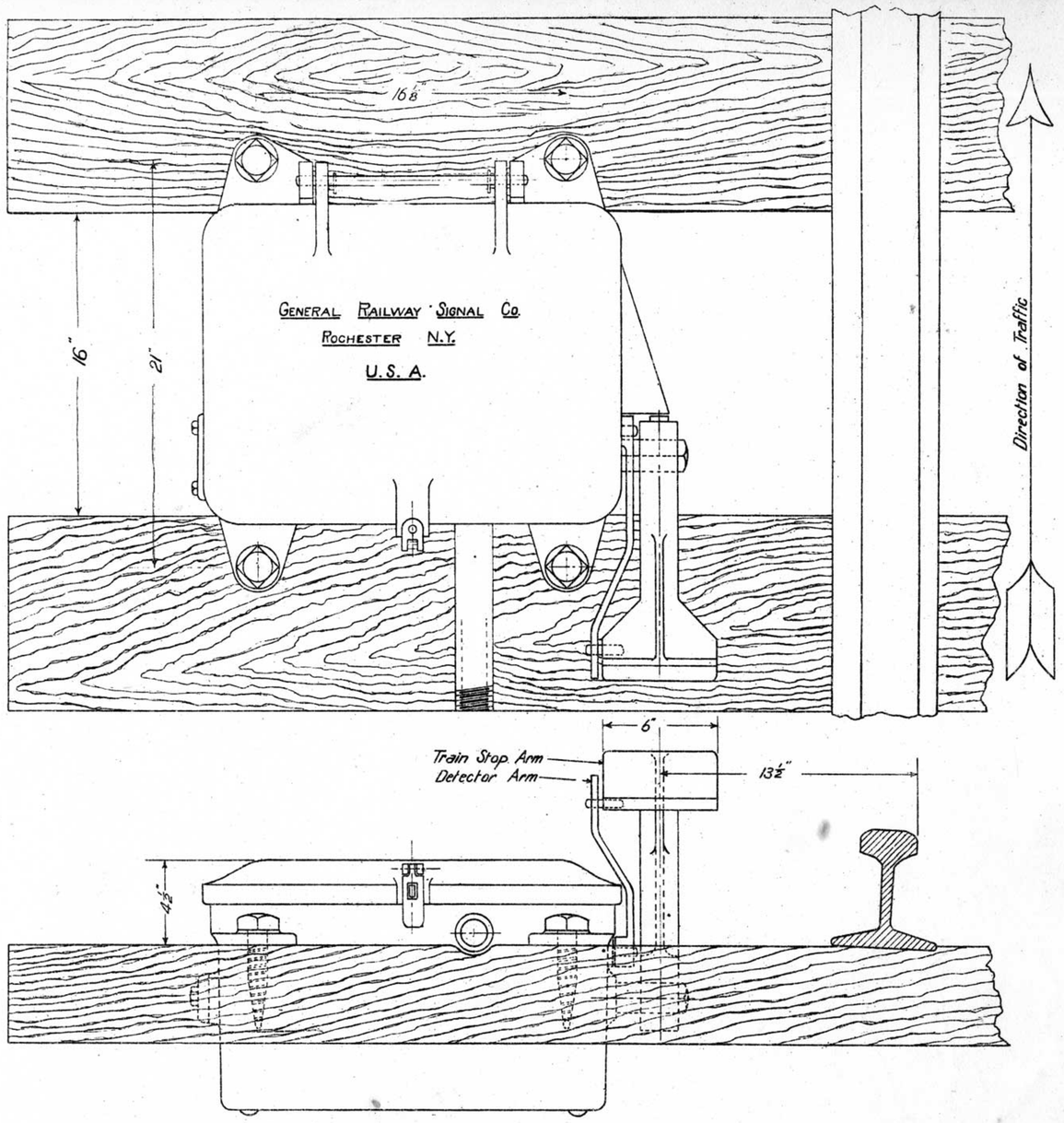

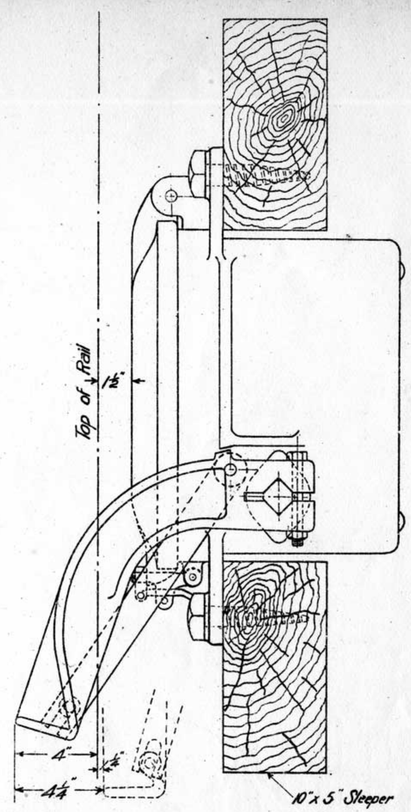

VICTORIAN RAILWAYS

TRAIN STOP LAYOUT

[G.R.S. A.C. MECHANISM]

24 : 4 : 20

Engineer of Signals	Drawn by	Traced
	C.W.H.	C.W.H.

B 355

L.168/28

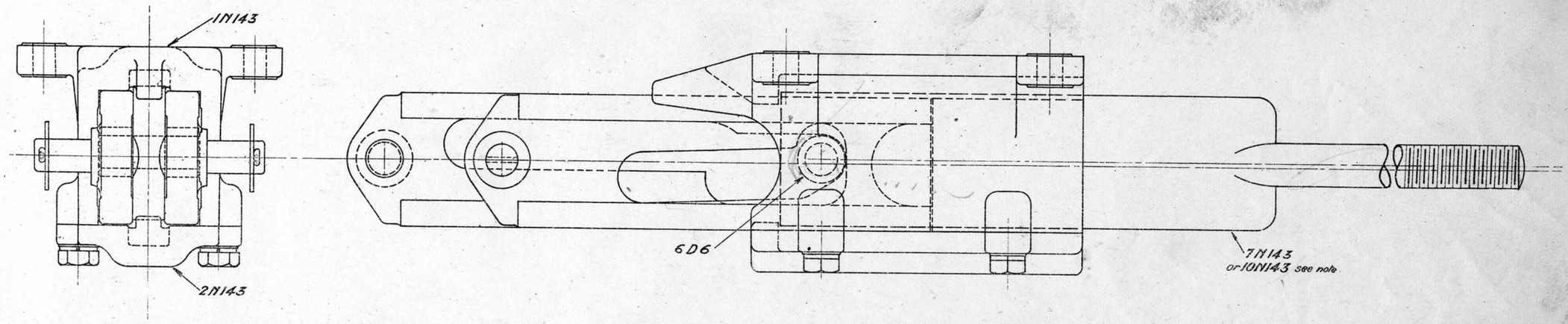

1B360

No	Name	Material	Quan'ty
1N143	Case.	C.I.	1
2N143	Cover.	C.I.	1
3N143	Motion Plate for Gate Lever.	C.S.	1
4N143	" " for Gate Stoplever.	C.S.	1
5N143	Pin for Motion Plate.	M.S.	2
* 6N143	" " End Plate.	M.S.	1
7N143	End Plate for Operating Gate Stop.	M.S.	1
6D6	Roller.	M.S.	2
Stock	$\frac{5}{8}$" x 1$\frac{5}{8}$" Set Screw & Sprg. Washer.	—	4
"	$\frac{3}{16}$" Split Pin 1$\frac{1}{2}$" long.	—	2
"	1" Washer.	—	2

* In special cases End Plate 10N143 may be used as shown on drg. F989

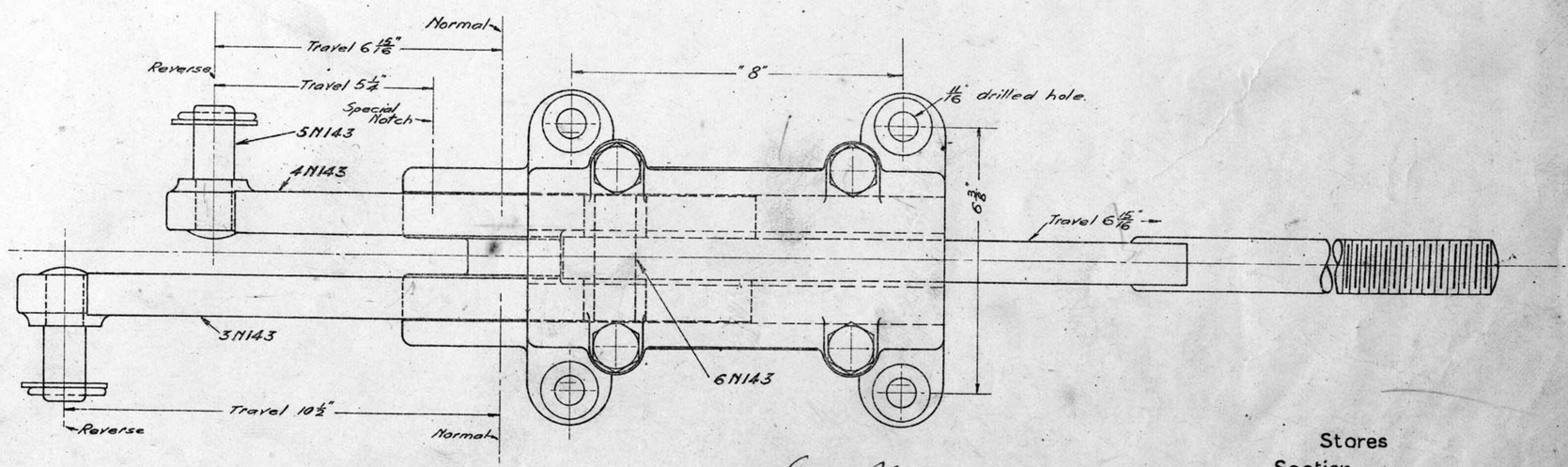

See Blueprint for Modifications

Stores
Section _____
Item No _____

VICTORIAN RAILWAYS
OPERATING MOVEMENT
FOR GATE STOP
Type A
Assembly
Patent No. 16985/20
12-7-20

Engineer of Signals	Drawn by F.W.H.	Traced by F.W.H.

B360

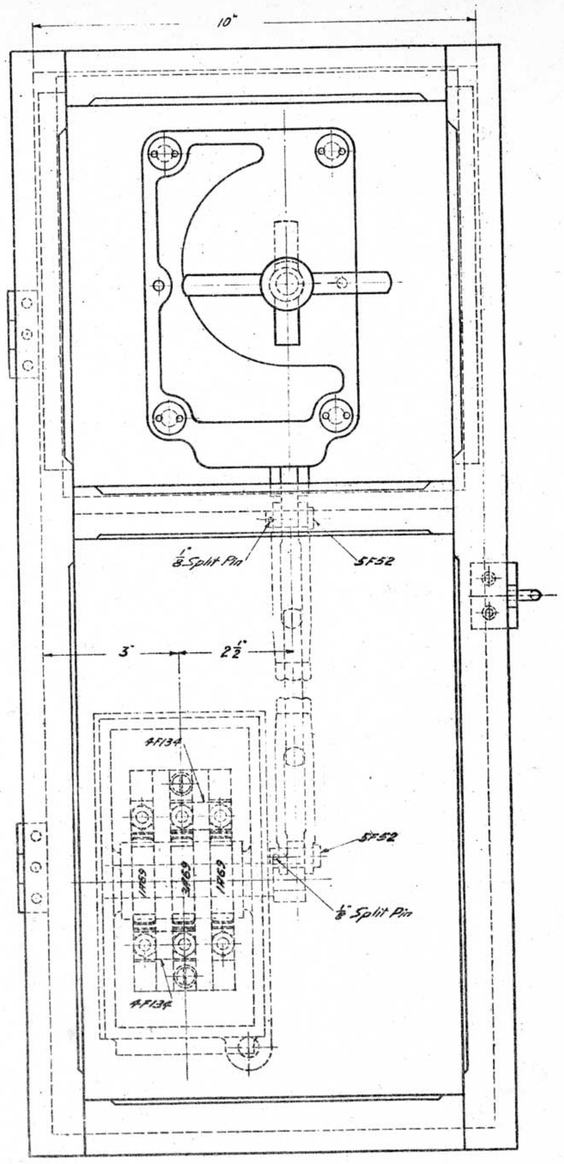

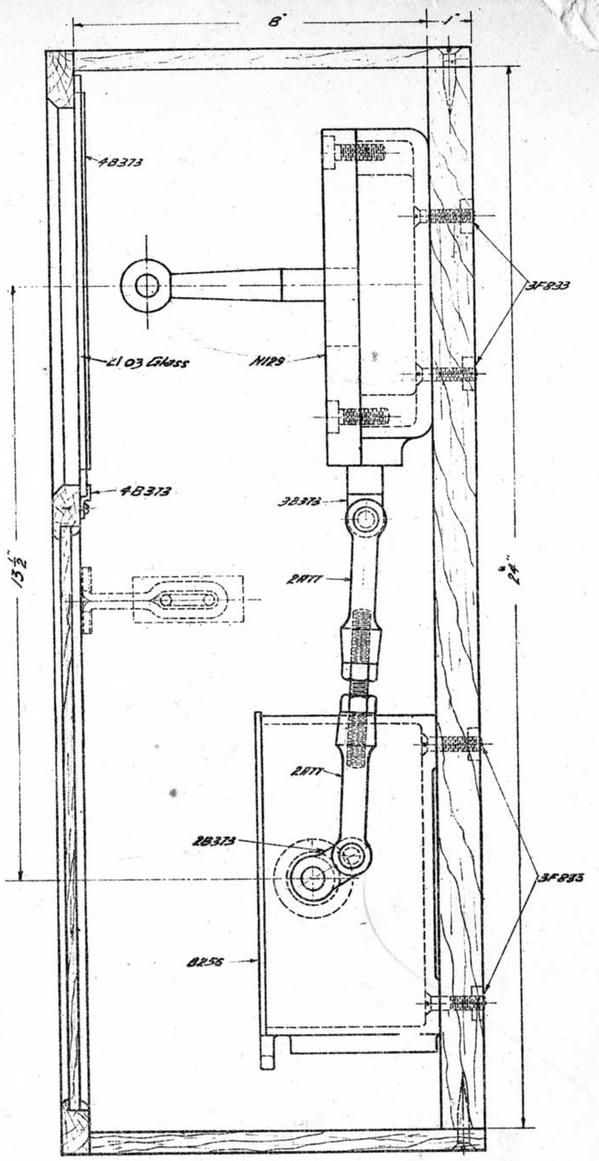

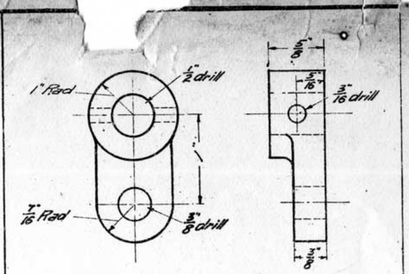

12-11-20 Arm 2B373

12-11-20 Connecting Eye 3B373

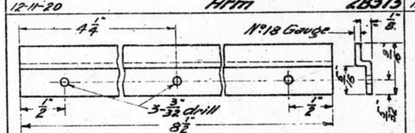

12-11-20 Retaining Clip 4B373

1B373
List of Parts

No	Name	Material	Qnty
B256	Circuit Controller (See note)		1
2B373	Arm	Brass	1
3B373	Connecting Eye	M.S.	1
1H69	Contact Band		2
3H69	" "		1
4F134	Terminal Connecting Link	Brass	2
N129	Annett Lock (See note)		1
2H77	Adjusting Jaw	Brass	2
SF52	Cotter Pin-1" long	M.S.	2
4B373	Retaining Clip	Brass	3
3F833	Screw No OBA-1½" long (Fitted with nuts)		
Stock	Nuts ⅜"	M.S.	2
"	Rod ⅜"-3½" long-Screwed full length	"	1
"	Split Pin ⅛"	"	2

— Note —

Circuit Controller:- Standard Arm and Contact Bands to be replaced as per above list.

Annett Lock :- Back lug to be removed & bottom to be suitably drilled & countersunk to take 4-OBA screws. Plunger to be slotted & fitted with connecting eye 3B373 as shown.

Case :- Complete apparatus to be mounted in wooden case as shown in General Assembly. Top panel of door to be fitted with 21 oz glass 3⅝ x 8⅞ held in position by part No 4B373 but removable when door is open. Hasp & Staple to suit standard lock.

Circuit Controller & Annett Lock (Complete) 1B373

12-11-20

Redrawn See Blueprint Dated 1-7-31.

VICTORIAN RAILWAYS
CIRCUIT CONTROLLER (3 WAY)
OPERATED BY ANNETT LOCK

Scale 6"=1 foot 12-11-20

Engineer of Signals	Drawn by R.J.W.	Traced by R.J.W.

B373

L 47/29

Note - Letters ⓐ ⓑ ⓒ refers to pair of contacts made.

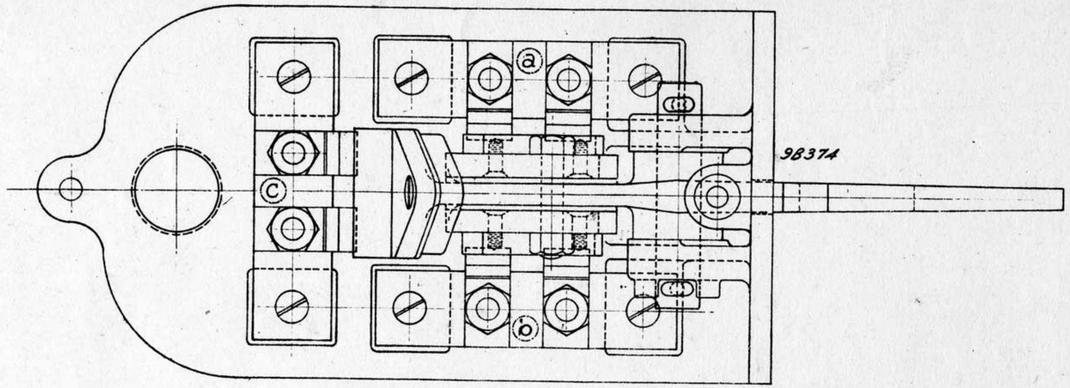

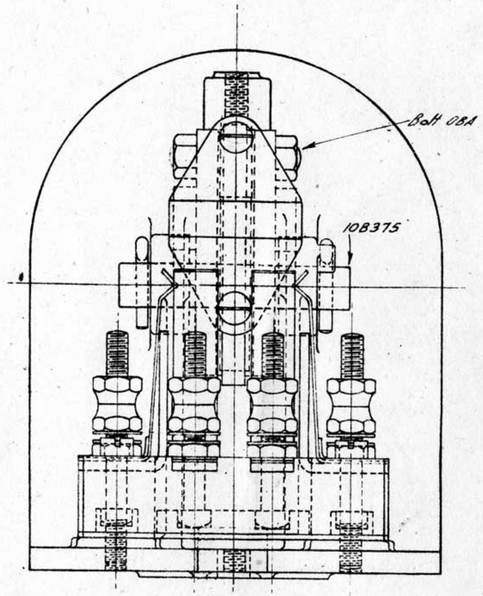

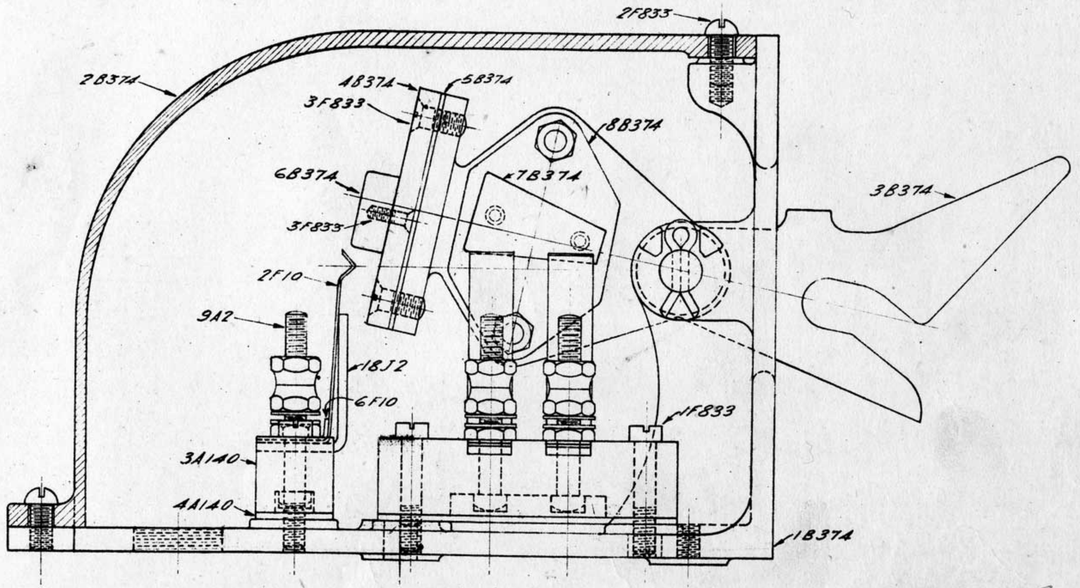

Contact Box Complete.

Condition of Lever	No of Circuits Made			
	1B377	2B377	3B377	4B377
Lever normal.	—	1 (a)	—	1 (a)
Catch Lifted lever normal.	3(abc)	2(bc)	1 (a)	1 (c)
Lever out of normal.	2(ab)	1 (b)	1 (a)	—

No	NAME	Material	Quantity			
			1B377	2B377	3B377	4B377
1B37A	Base	CI	1	1	1	1
2 "	Cover	"	1	1	1	1
3 "	Contact Arm	"	1	1	1	1
4 "	Insulating Plate	Fibre	1	1	-	1
5 "	" Sole Plate	"	1	1	-	1
6 "	Contact Piece	Brass	1	1	-	1
7 "	" "	"	2	1	1	-
8 "	Insulating Plate	Fibre	2	1	1	-
9 "	" Sole Plate	"	2	2	1	1
10 "	Pin	MS	1	1	1	1
1F1367	Insulating Plate	Fibre	-	1	-	1
2F1367	Contact Piece	Brass	-	1	-	1
2F833	Screw OBA ¾" long	Brass	2	2	2	2
9A2	Binding Post	Brass	6	6	2	4
3A140	Insulating Base	Fibre	3	3	1	2
4 "	" " Sole Plate	"	3	3	1	2
1BJ2	Spring Contact Arrester	MS	6	6	2	4
2F10	Contact Spring	Phos Bronz	6	6	2	4
6 "	" " Keeper	G Silver	6	6	2	4
3F833	Screw OBA 3/16" long	Brass	2	2	-	2
1 "	" 1¼" long Screwed ¼"	"	6	6	2	4
3 "	" 3BA 7/16" long	"	6	6	2	4
Stock	3/16 Split Pin 1" long	M.S.	2	2	2	2
"	Hex Hd bolt & nut OBA 1⅛" long Screwed ¼"	"	2	2	-	-
"	Hex Hd bolt & nut OBA 15/16" long Screwed ¼"	"	-	-	2	2

Stores
Section_____
Item No_____

See Blueprint for Modification.

Revised
See Print 4-7-40

30-6-23 Alteration No 49 SCO

1 8-9-22 Parts 2B377, 3B377 & 4B377 added. W.D. R.G.C.

VICTORIAN RAILWAYS
CONTACT BOX
FOR
CATCH ROD AND LEVER
Assembly
31-12-20

Engineer for Signals | Drawn by F.H. | Traced by F.H.

B377

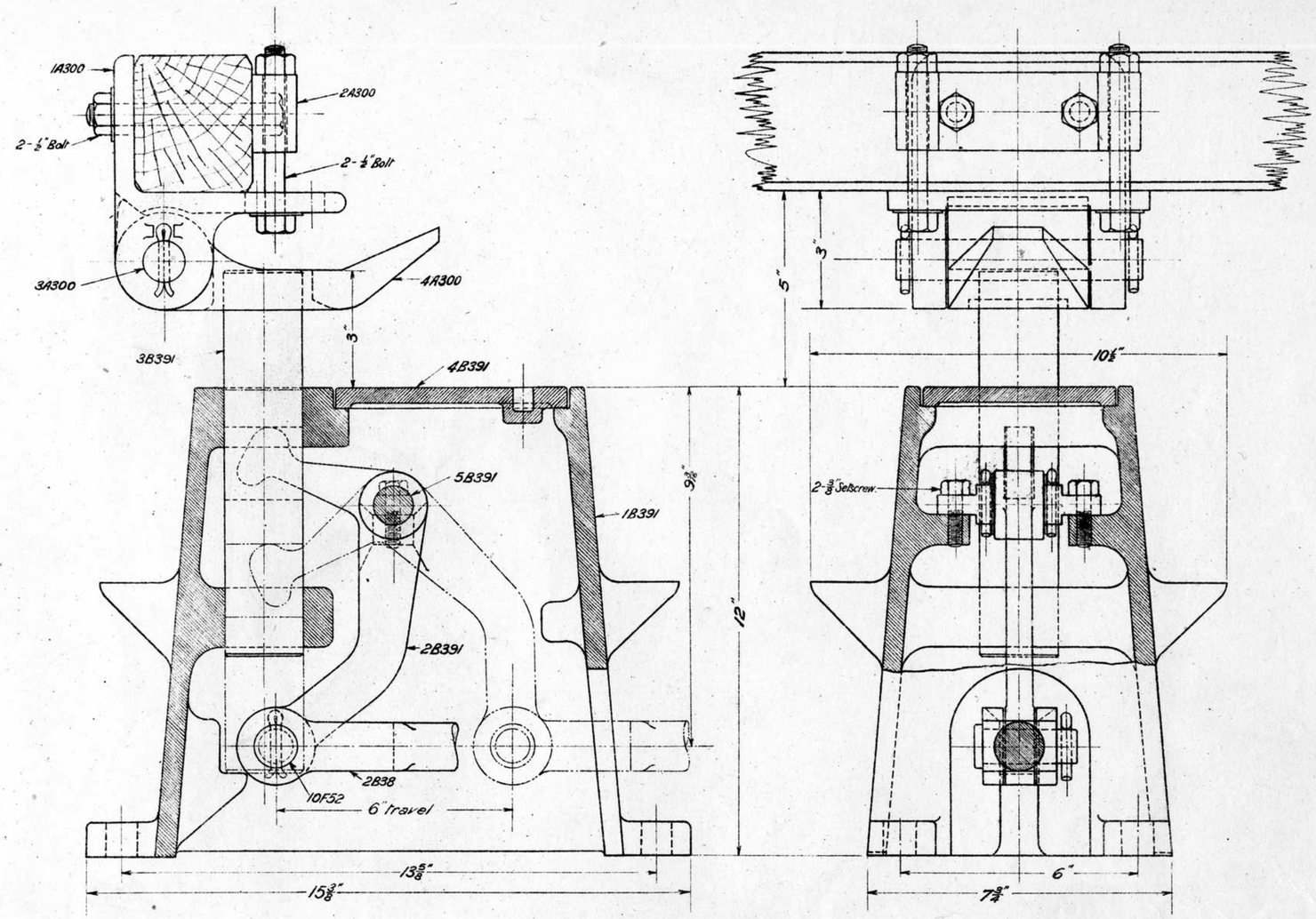

Gate Stop Type "B"
Complete – 1B392

No	Name	Mat.	Only.
1A300	Bracket	M.I.	1
2A300	Support	M.I.	1
3A300	Spindle	M.S.	1
4A300	Catch	M.I.	1
1B391	Box	C.I.	1
2B391	Crank	M.I.	1
3B391	Stop	M.S.	1
4B391	Cover	C.I.	1
5B391	Spindle	M.S.	1
2B38	Solid Jaw (end to weld)	M.S.	1
10F52	Pin 2⅜" long	M.S.	1
* Stock	½" Hex Nut & Bol. 4½" long with washer	M.S.	2
"	½" " " " 4¼" "	M.S.	2
"	1" Washer	M.S.	2
"	¼" Split Pin	M.S.	5

* If bottom beam of gate is more than 3" thick these bolts to be lengthened accordingly

5"x5" Timber to be fitted around box only if required.

Stores
Section_____
Item No_____

VICTORIAN RAILWAYS
GATE STOP
Type "B"
Assembly
9-2-22

Engineer of Signals	Drawn by	Traced by
	W.J.	R.G.C.

B392

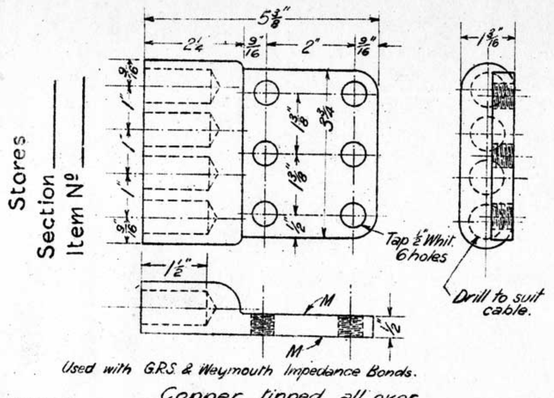

Stores
Section ____
Item Nº ____

28-9-21 Copper tinned all over Bond End 1B401

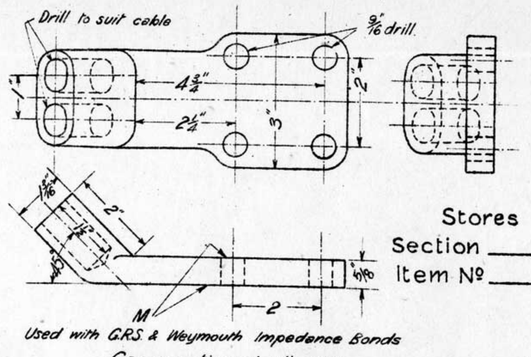

Stores
Section ____
Item Nº ____

28-9-21 Copper tinned all over Bond End 2B401

Stores
Section ____
Item Nº ____

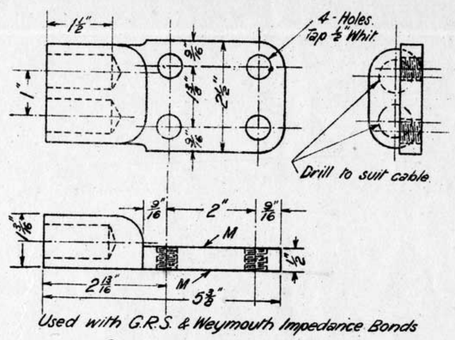

28-9-21 Copper tinned all over Bond End 3B401

Stores
Section ____
Item Nº ____

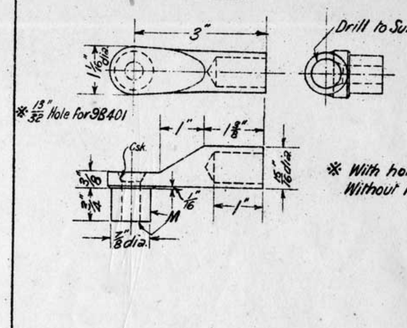

28-9-21 Copper Bond End (250°) 4B401 5B401

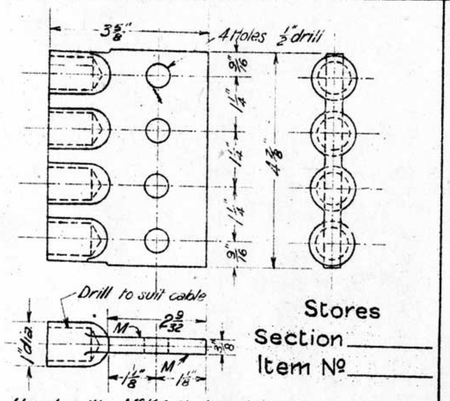

Stores
Section ____
Item Nº ____

28-9-21 Copper Gunmetal tinned all over Bond End 6B401

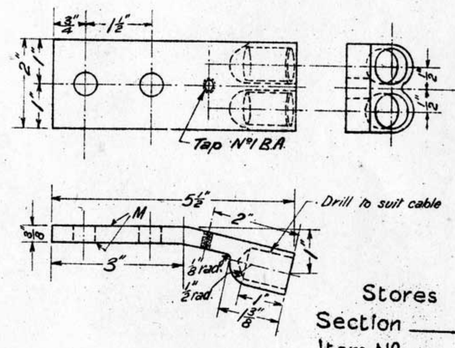

Stores
Section ____
Item Nº ____

28-9-21 Copper Gunmetal tinned all over Bond End 7B401

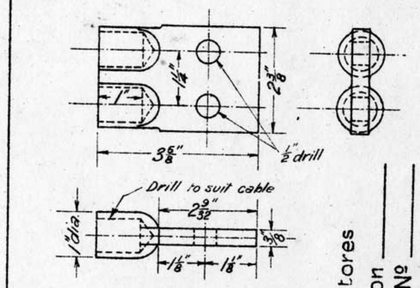

Stores
Section ____
Item Nº ____

28-9-21 Copper Gunmetal tinned all over Bond End 8B401

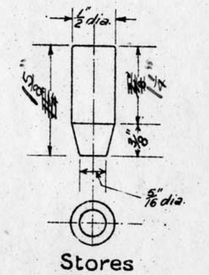

Stores
Section ____
Item Nº ____

28-9-21 M.S. Pin 9B401

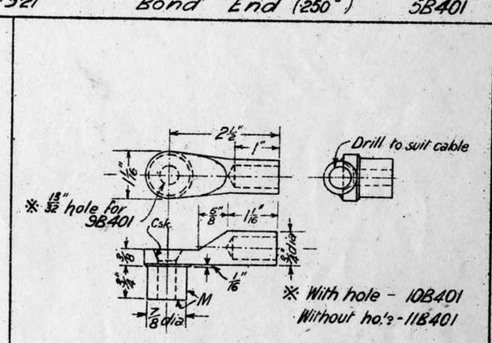

Stores
Section ____
Item Nº ____

28-9-21 Copper Bond End (125°) 10B401 11B401

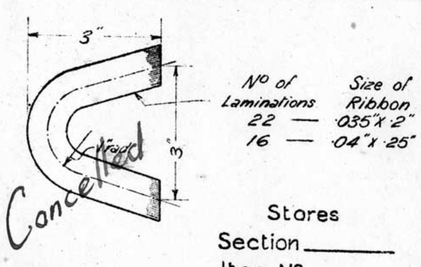

Stores
Section ____
Item Nº ____

28-9-21 Copper U-Bond for 66 lb rail 12B401

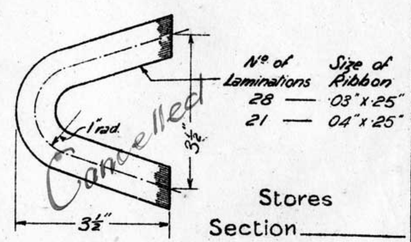

Stores
Section ____
Item Nº ____

28-9-21 Copper U-Bond for 80 lb rail 13B401

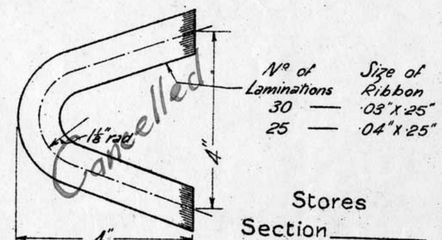

Stores
Section ____
Item Nº ____

28-9-21 Copper U-Bond for 100 lb rail 14B401

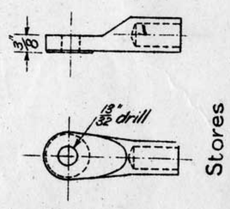

11B401 modified as shewn

Stores
Section ____
Item Nº ____

28-9-21 Copper Bond End 15B401

VICTORIAN RAILWAYS
U-BONDS and BOND ENDS
28-9-21

Engineer of Signals	Drawn by R.G.C.	Traced by R.G.C.

B401

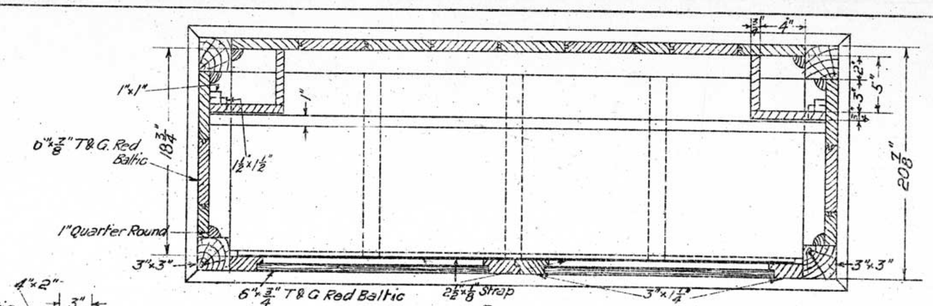

—PLAN—

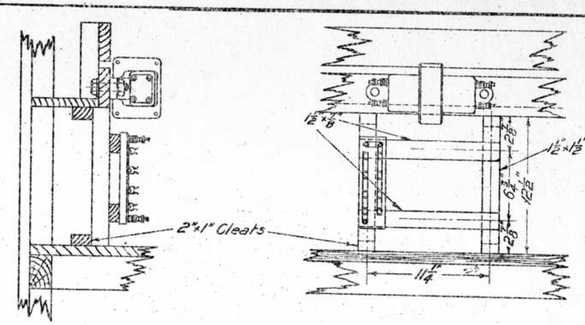

METHOD OF MOUNTING 110"/6" TRANSFORMER & REGULATOR PANELS
To be Specially Ordered as Required

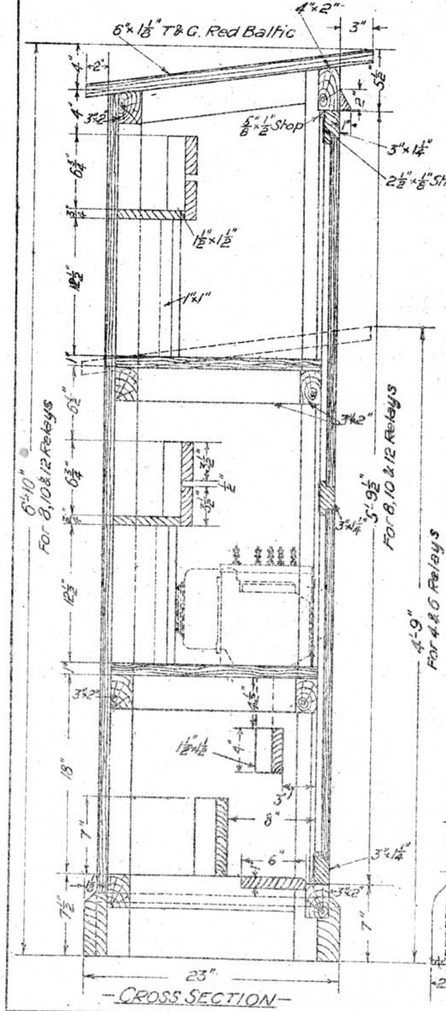

—CROSS SECTION—

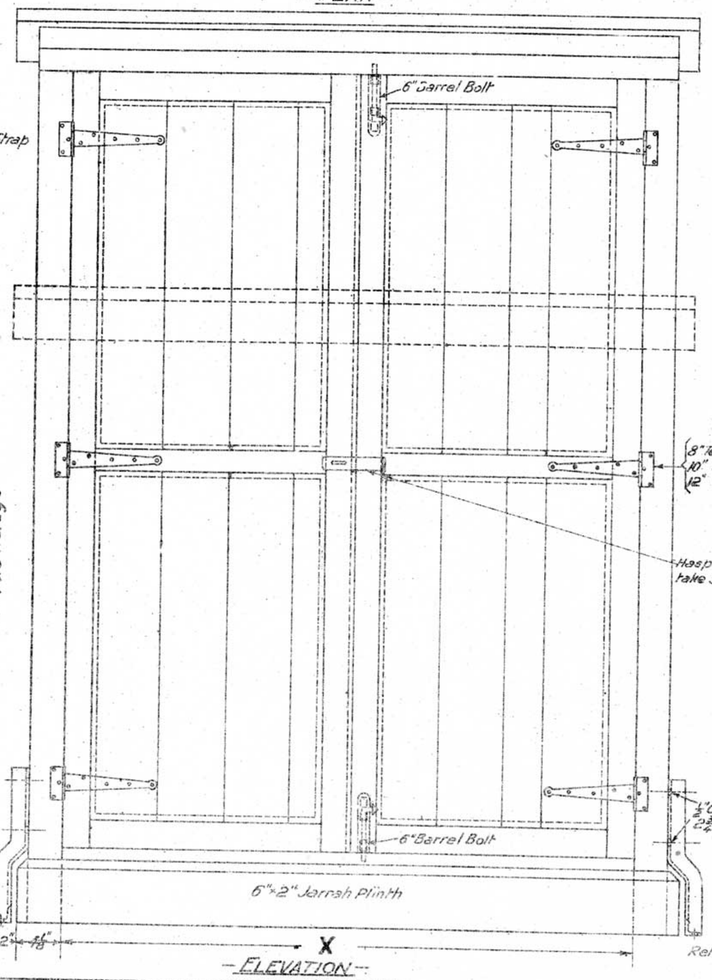

—ELEVATION—

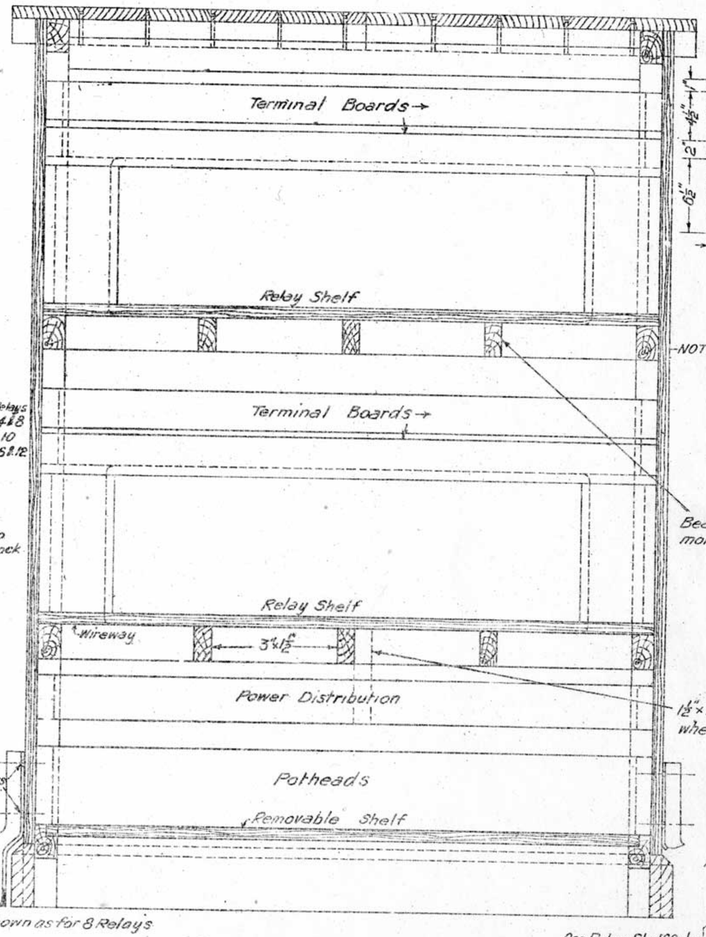

—SECTIONAL ELEVATION—

FIXING STIRRUP
To be secured to Corner Posts at each side of Box

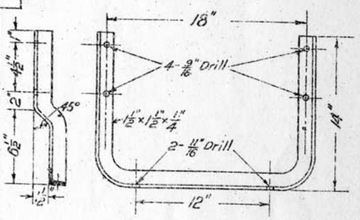

NOTE:- Outside of Relay Box to be completely covered with No 26g Sheet Iron, Painted

For 12 Relays	X = 6'-6"	12B418
" 10 "	X = 5'-5"	10B418
" 8 "	X = 4'-4"	8B418
One Relay Shelf Only " 6 "	X = 6'-6"	6B418
" 4 "	X = 4'-4"	4B418

17-10-22 Alteration No 34.

NOTE 22-6-22 This Drawing Supersedes Drg B48 dated 16-5-17

VICTORIAN RAILWAYS
RELAY BOX
OUTDOOR, TYPE "A".
22-6-22

Engineer of Signals	Drawn by V.G.C	Traced by V.G.C

B4/8

L.156/27

To be completely glazed inside and out except at face 'X'

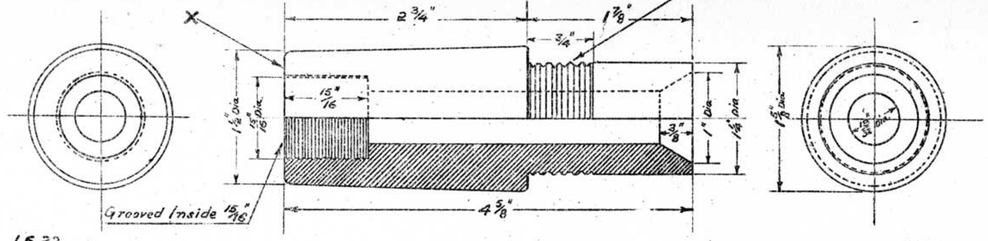

1.6.22. 1B419

To be completely glazed inside and out except at face 'X'

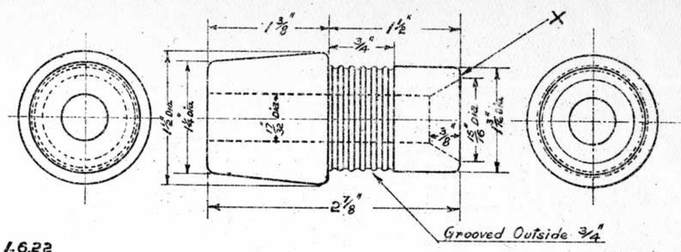

1.6.22 5B419

To be completely glazed inside & out except at face 'X'

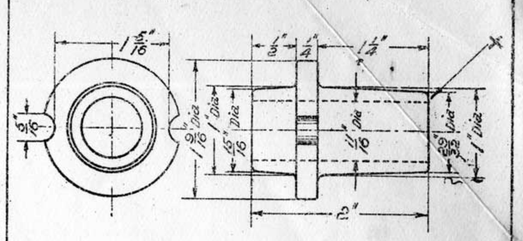

8.11.22 8B419

To be completely glazed inside and out except at face 'X'

Grooved Outside 3/4"

Keyway 1/8" wide x 1/16" deep

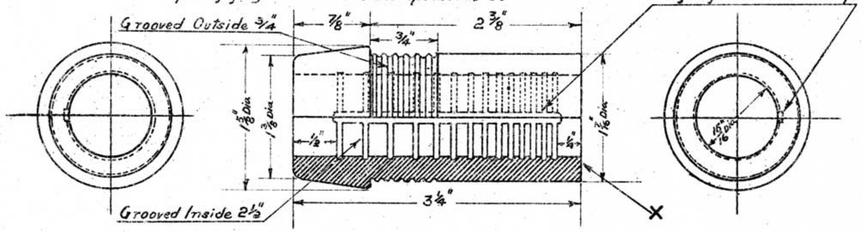

1.6.22. 2B419

To be completely glazed inside and out except at face 'X'

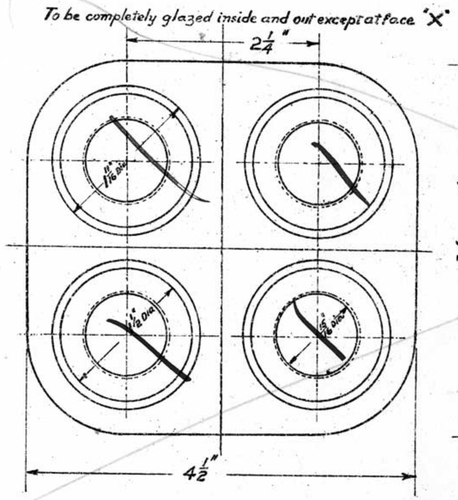

Outside Face to be serrated

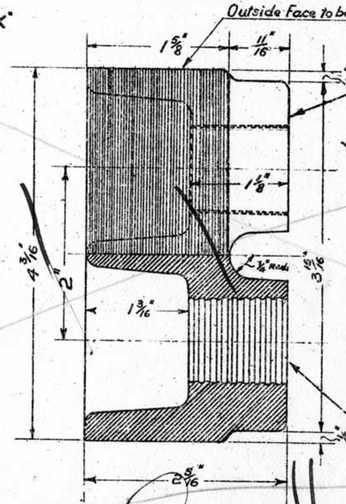

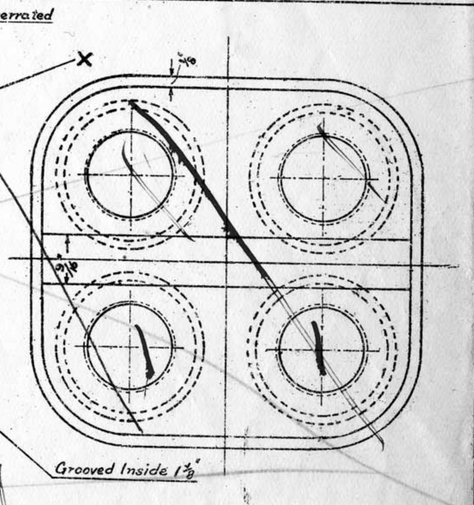

Grooved Inside 1 3/8"

Cancelled

1.6.22. 6B419

To be completely glazed inside and out except at face 'X'

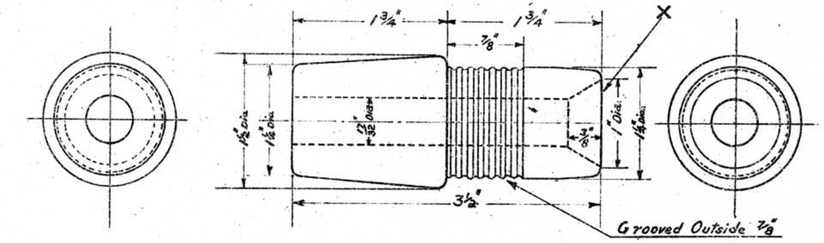

1.6.22. 3B419

To be completely glazed inside and out except at face X

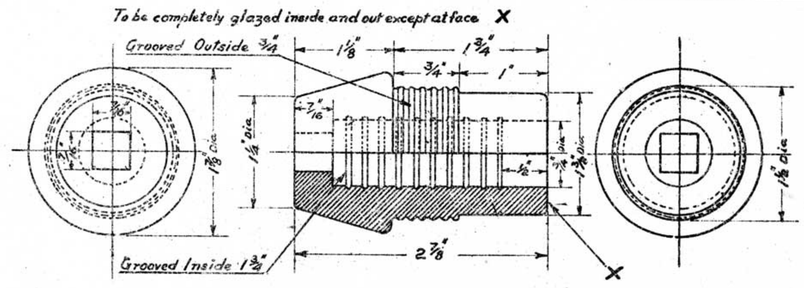

1.6.22 4B419

To be completely glazed inside and out except at face 'X'

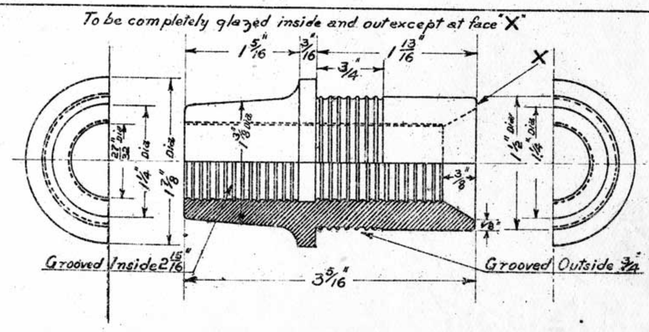

1.6.22. 7B419

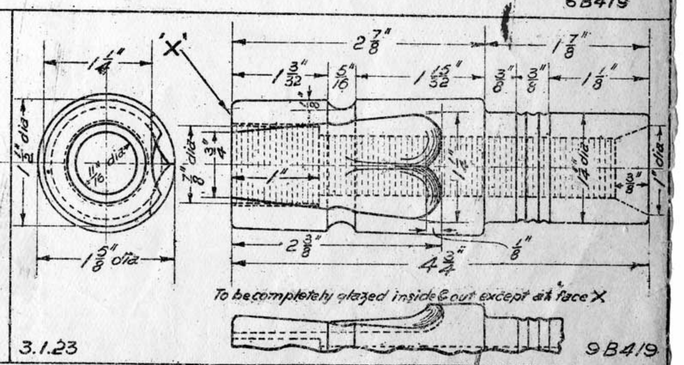

To be completely glazed inside & out except at face X

3.1.23 9B419

Redrawn 24/4/34
10B419, 11B419, 12B419
6B419 cancelled

2	3.1.23	Part 9B419 added	C.E.W.	VICTORIAN RAILWAYS PORCELAIN INSULATORS 1.6.22.	Engineer of Signals
1	6.11.22	Part 8B419 added	C.E.W.		Drawn by L. N.
					Traced by C.E.W.

B419

L.156/27

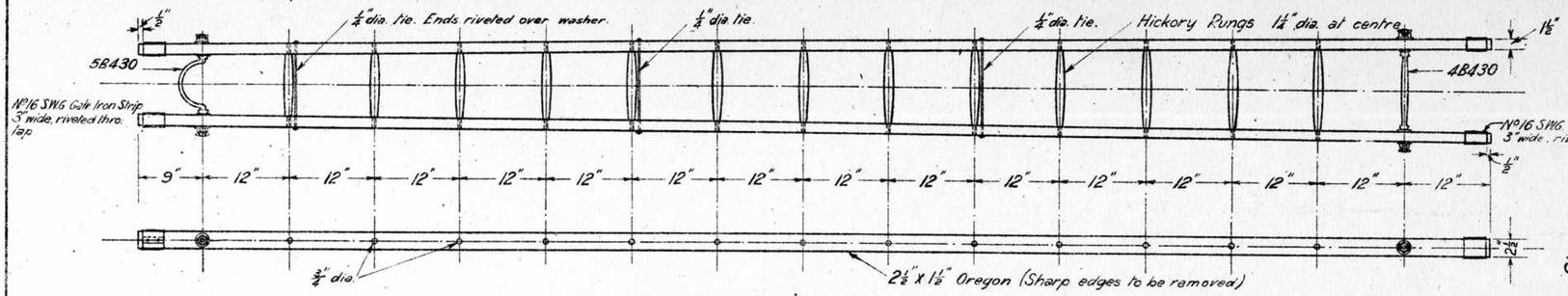

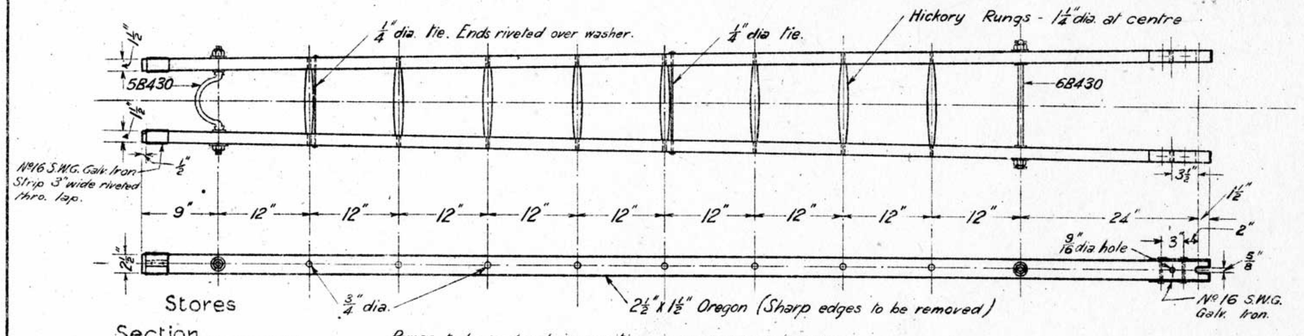

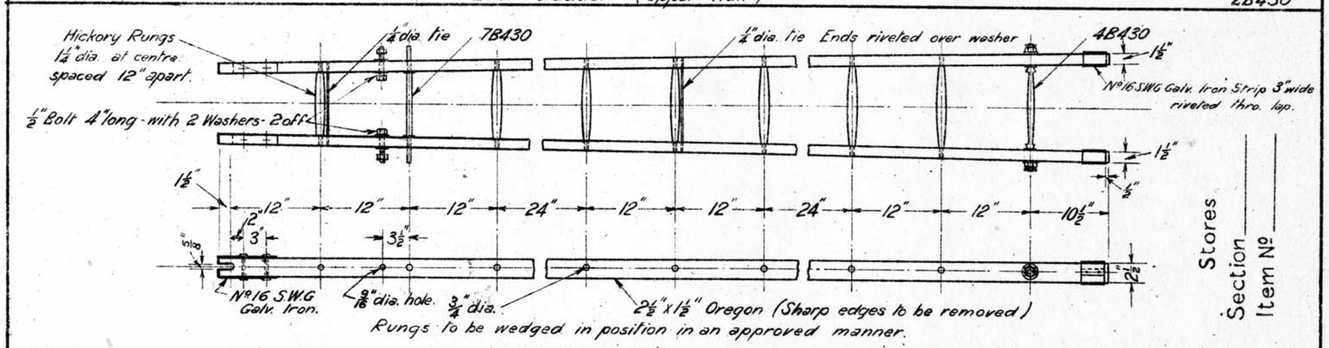

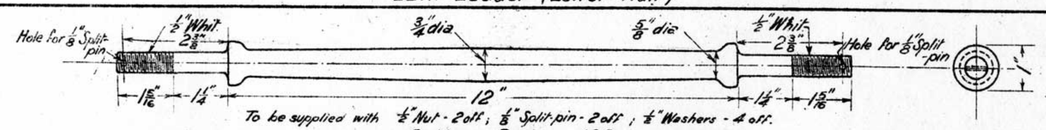

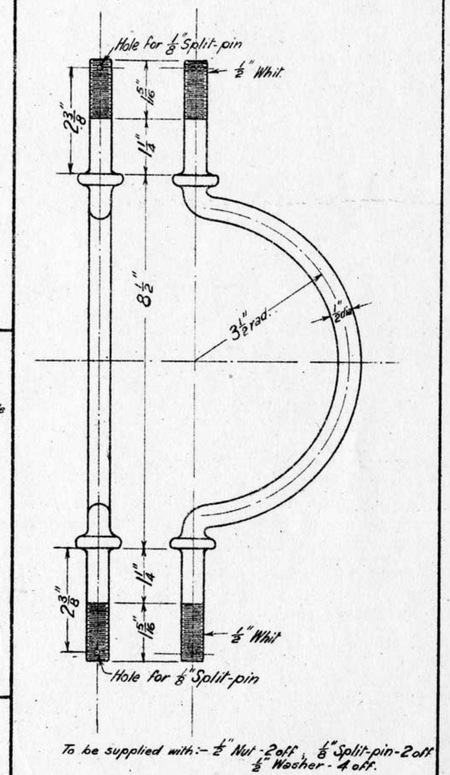

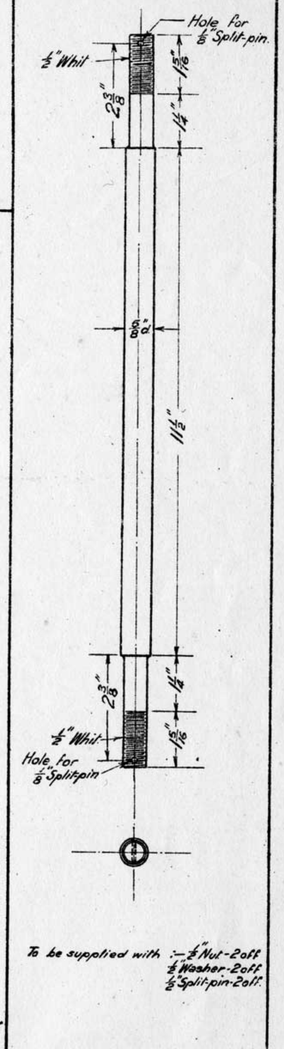

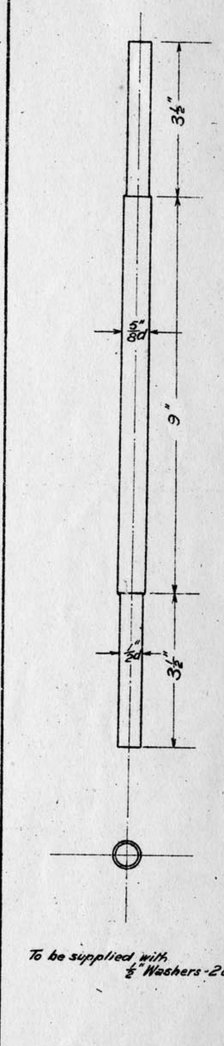

VICTORIAN RAILWAYS

LADDERS

16ft. one-piece & 22ft. two-piece

1-9-22

Chief Engr. of Stores & Mats.	Drawn by	Traced by
	R.G.C.	R.G.C.

B430

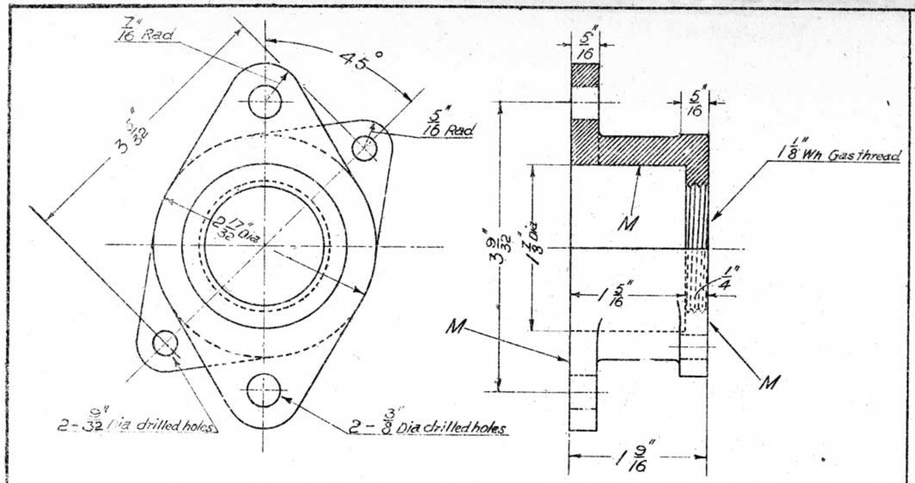

11.10.22 — G.M. Gland — 4B445

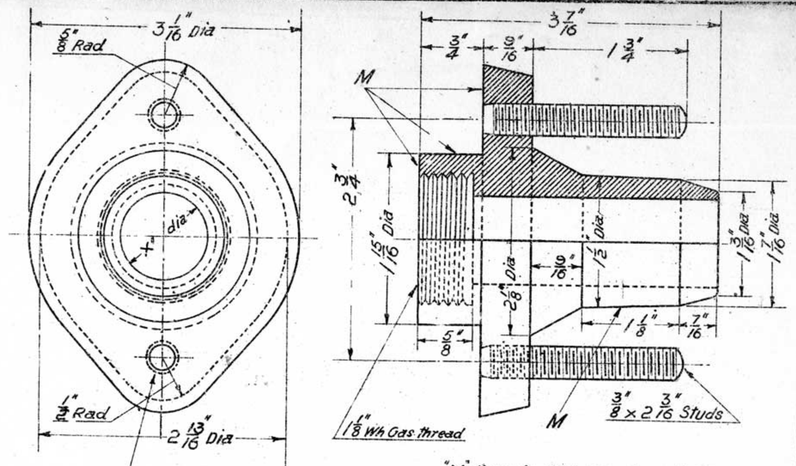

11.10.22 — G.M. Gland — 7B445

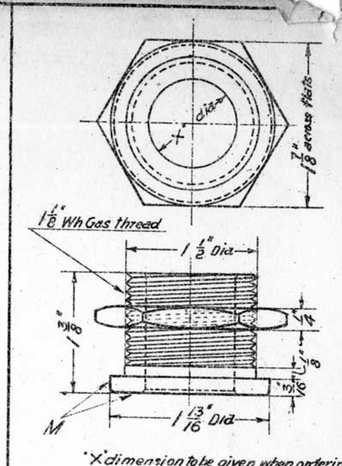

11.10.22 — G.M. Gland — 8B445

11.10.22 — G.M. Armour Clamp — 5B445

11.10.22 — G.M. Gland — 6B445

11.10.22 — C.I. Armour Clamp — 9B445

11.10.22. — G.M. Gland for H.T. Dividing Box (Complete) — 3B445

1B445 - Gland for Cabin Transformer (complete)

N°	NAME	MAT'L	QNTY
4B445	Gland	G.M	1
5B445	Armour Clamp	" "	1
6B445	Gland	" "	1
Stock	Bolts 1/4" x 3" with lock nuts (threaded 2 1/2")		2

2B445 - Gland for H.T. Switch gear (complete)
Dimension X to be stated

N°	NAME.	MAT'L	QNTY.
* 7B445	Gland	G.M	1
* 8B445	"	" "	1
9B445	Armour clamp	C.I	1
Stock	3/8" dia Nuts & spring Washers		2

* For Siemens .03 Cable — X = 1" dia
" " .015 " — X = 13/16" "
" B.I .03 " — X = 3/4" "
" " .015 " — X = 11/16" "

Chief Engr of Signalling — Drawn by C.E.W. — Traced by C.E.W. — B445

VICTORIAN RAILWAYS
GLANDS FOR CABLES

11.10.22

B445

L 126/21

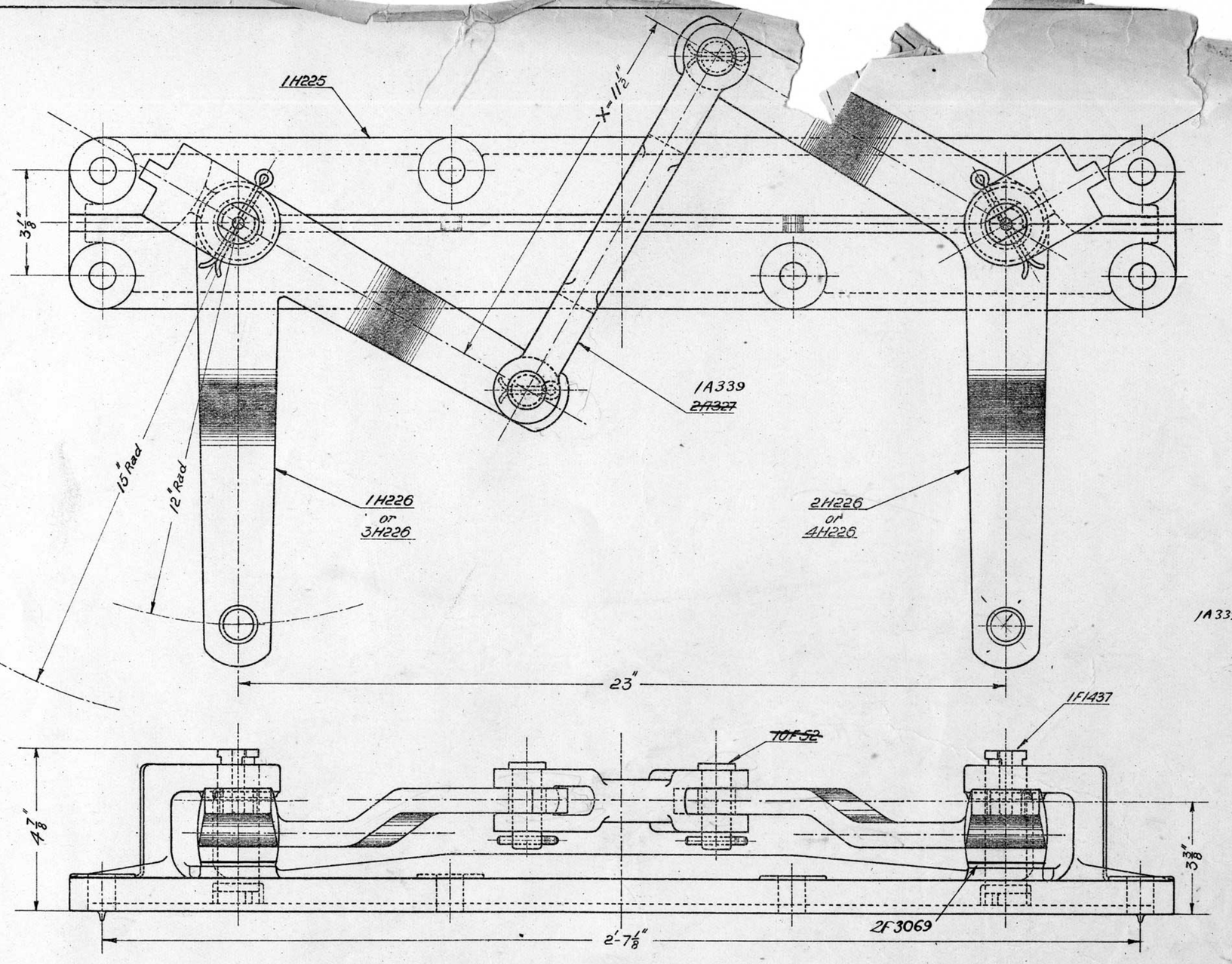

1B447 Compensator complete with standard 12" crankarm
2B447 " " " special 15" " "

Nº	NAME	MAT^L	QUANTITY 1B447	QUANTITY 2B447
1H225	Base	C.I	1	1
1H226	Crank (Acute angle) 12" Std:	W.I	1	-
2H226	" (Obtuse ") 12" "	" "	1	-
3H226	" (Acute ") 15" Spl:	" "	-	1
4H226	" (Obtuse ") 15" "	" "	-	1
1A339 ~~2A327~~	1¼" connecting Rod X = 11½"	M.S	1	1
1F1437	Pins (Crank)	H.S	2	2
~~10F52~~	~~" (connecting Rod) 2⅜" long~~	~~" "~~	~~2~~	~~2~~
2F3069	Spacing Washer	M.S.	2	2
Stock	Split Pins ¼" X 3"		2	2
	" " ¼" X 1⅜"		2	2

Stores
Section _____
Item Nº _____

20.12.22

See Blueprint for additions

VICTORIAN RAILWAYS
COMPENSATOR
Type "C"
Assembly

20.12.22

Chief Engr of Sigs & Teleg

Drawn by C.E.W.

B44

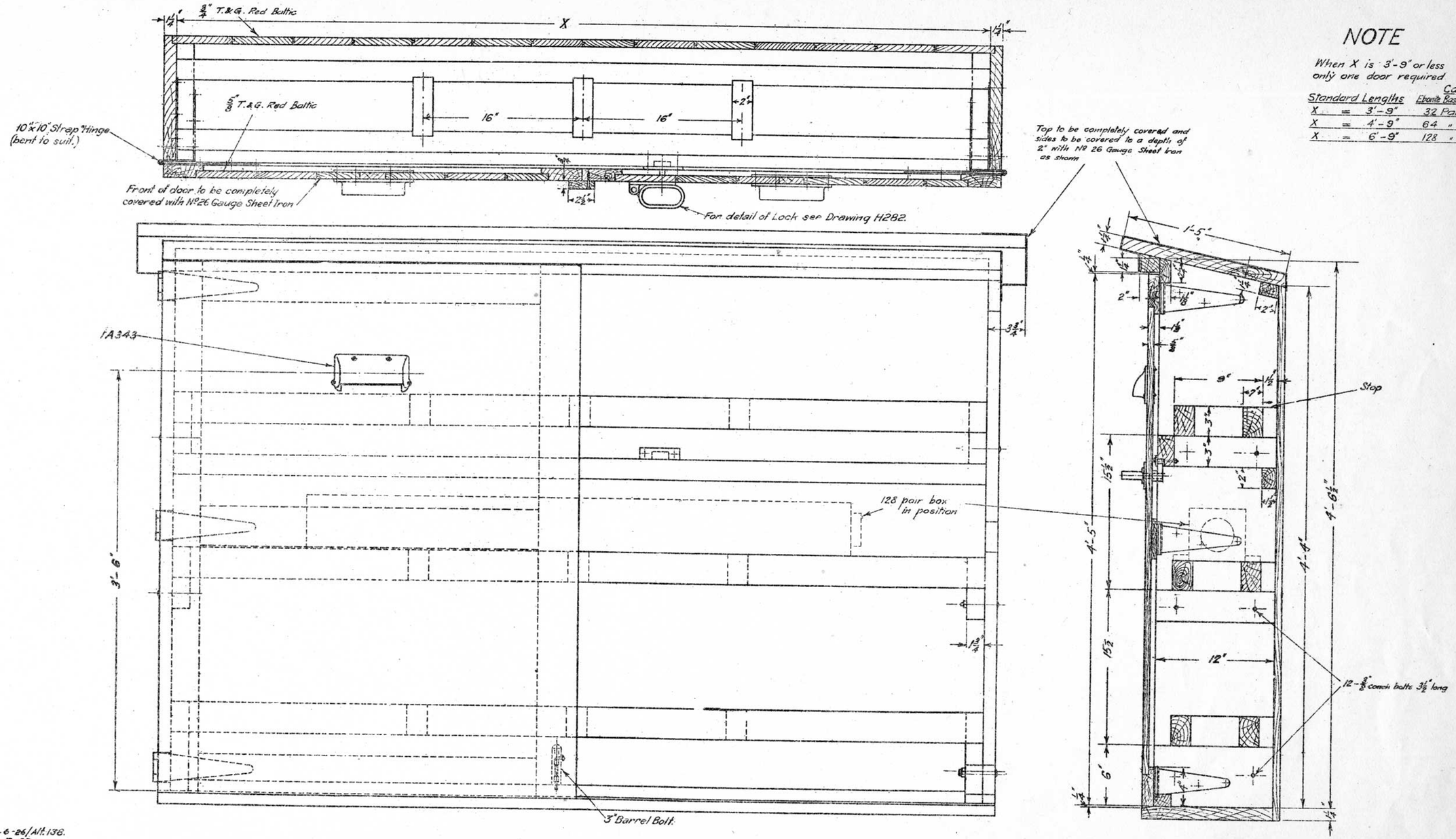

NOTE

When X is 3'-9" or less only one door required

Standard Lengths		Capacity Ebonite Base	Capacity Porcelain Base
X	= 3'-9"	32 Pairs	26 Pairs
X	= 4'-9"	64 "	52 "
X	= 6'-9"	128 "	104 "

8-6-26/Alt. 138.
9-7-23

CABLE HOUSING BOX (shown for 128 Pair Cables)

length X to be stated, see note 1B469

8-6-26 Alteration No 138	VICTORIAN RAILWAYS CABLE HOUSING BOX ASSEMBLY	Chief Engr of Sigs. & Tels	Drawn by S.C.O.	Traced by I.S.C.O.
9-7-23		B 469		

L.155/27

Lead-in holes OT to be drilled by shops

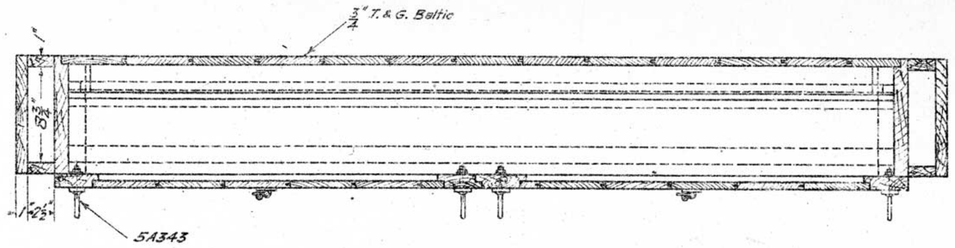

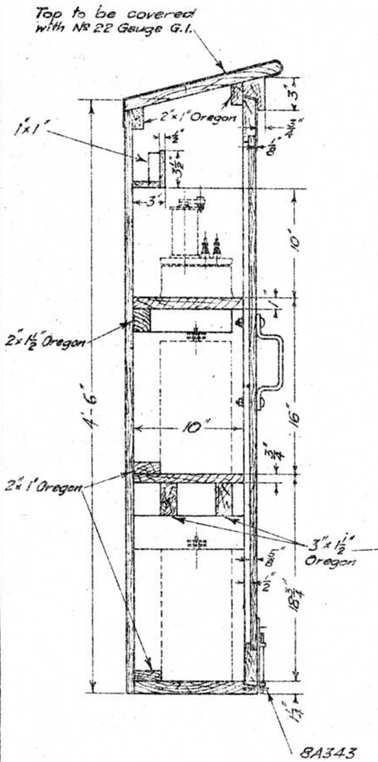

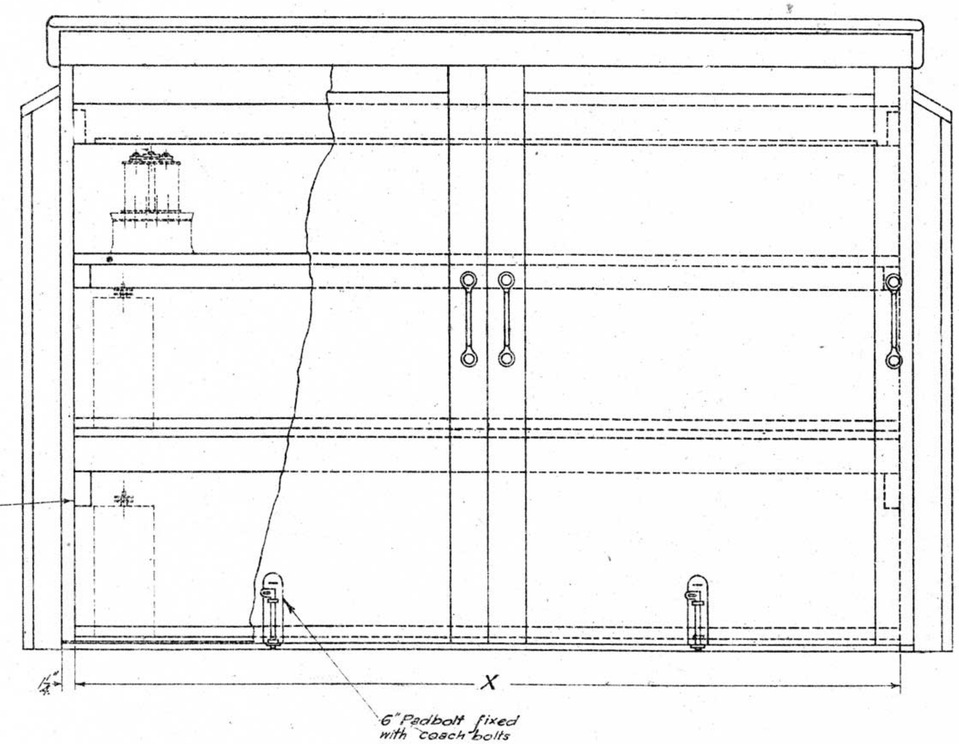

RELAY & BATTERY BOX CAPACITY 3 RELAYS & 16 CELLS X = 4'-3" (ONE DOOR) 2B587
" " " " 5 " 24 " X 6'-3" (TWO DOORS) 1B587

1-3-26

Sides to be painted before screwing wire chute in position
Lead-in holes NOT to be drilled by shops

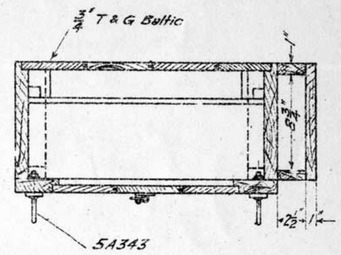

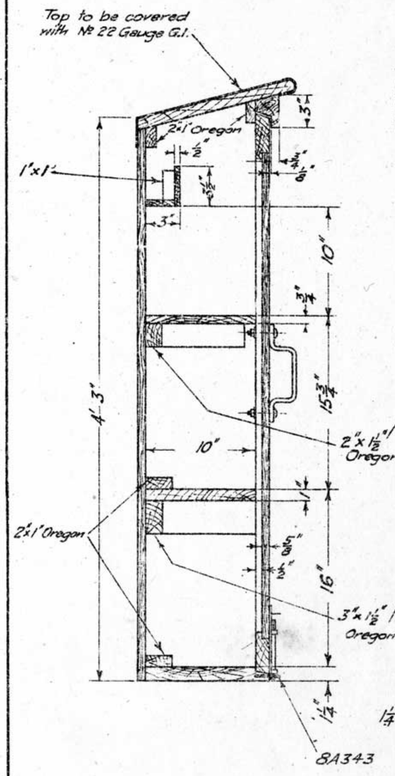

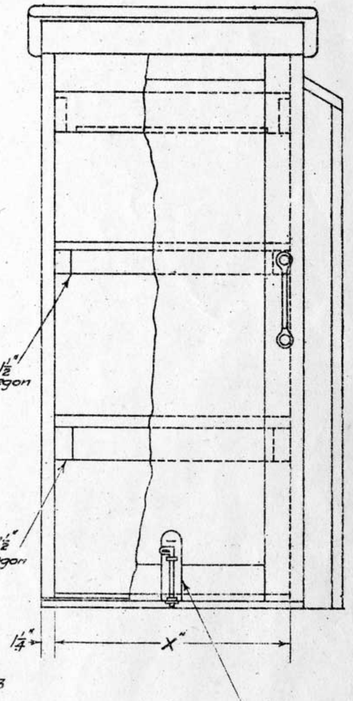

2 RELAYS & 8 CELLS — X = 2'-3"
1 RELAY & 6 CELLS — X = 21"

CAPACITY 2 RELAYS & 8 CELLS — 4B587
RELAY & BATTERY BOX CAPACITY 1 RELAY & 6 CELLS — 3B587

1-3-26

/ 30-9-26 Part No. 4B587 Added

NOTE For method of mounting see A 414

Supersedes Drg. A123

VICTORIAN RAILWAYS

RELAY & BATTERY BOXES FOR D.C. RELAYS AND CAUSTIC SODA CELLS OUTDOOR TYPE 1-3-26

Chief Engr. Sigs. & Tels.	Drawn by S.C.O.	Traced by S.C.O.

B 587

L.145/27

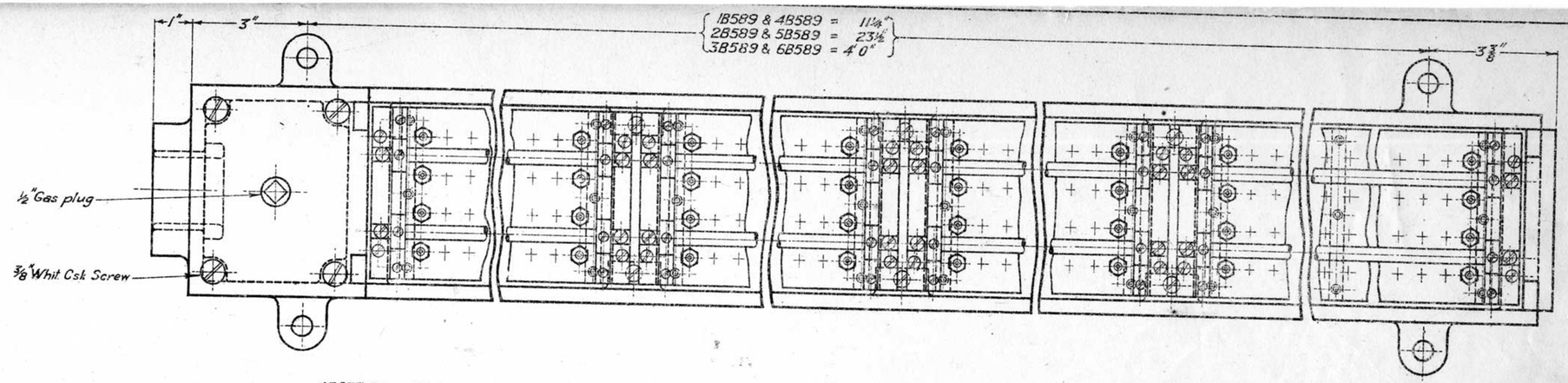

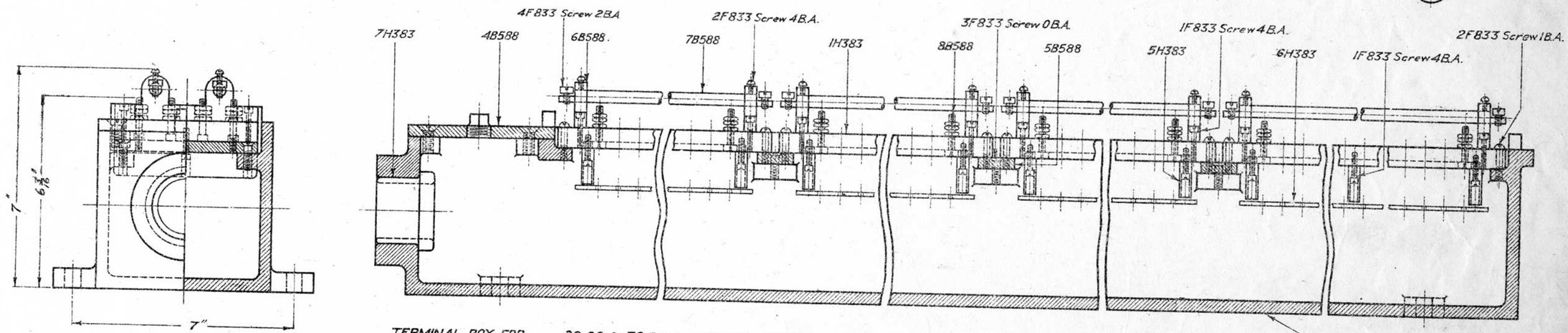

TERMINAL BOX FOR 20, 26 & 32 PAIRS WITHOUT EARTHING RODS 1B589 WITH EARTHING RODS 4B589
" " " 39, 46, 52 & 64 " " " " 2B589 " " " 5B589
" " " 86, 104, 116 & 128 " " " " 3B589 " " " 6B589

Nº	Name	Mat	Quantity					
			1B589	2B589	3B589	4B589	5B589	6B589
1B588	Box	C.I.	1			1		
2B588	Box	C.I.		1			1	
3B588	Box	C.I.			1			1
4B588	Cover	C.I.	1	1	1	1	1	1
5B588	Bar	M.S.		1	3		1	3
6B588	Support	Ebonite				2	4	8
7B588	Earthing Rod X'=11⅛"	Brass				2	4	8
8B588	Terminal Screw	Brass	Quantity to suit Nº of pairs ordered					
1H383	Base	Ebonite	1	2	4	1	2	4
5H383	Distance Piece	Cres. Fibre	3	6	12	3	6	12
6H383	Wire "	"	2	4	8	2	4	8
7H383	Bush	Kauri	1	1	1	1	1	1

Nº	Name	Mat	Quantity					
			1B589	2B589	3B589	4B589	5B589	6B589
1F833	Screw 4 B.A. ⅞" long screwed ⅝"	Brass	9	18	36	13	26	52
2F833	" 1 B.A. 1" " " ½"	"	4	8	16	4	8	16
2F833	" 4 B.A. ⅝" "	"				4	8	16
3F833	" 0 B.A. ⅞" " screwed ⅜"	"		2	6		2	6
Stock	⅜" Whit Csk head Screw ⅞" long	M.S.	4	4	4	4	4	4
"	½" Gas Plug		1	1	1	1	1	1

1B588, 2B588 or 3B588

When ordering state Part Nº & Nº of pairs required.

86, 104, 116 & 128 pairs — 6B589
39, 46, 52 & 64 " — 5B589
20, 26 & 32 " — 4B589
86, 104, 116 & 128 " — 3B589
39 46, 52 & 64 " — 2B589
20, 26 & 32 " — 1B589

26-5-26

TERMINAL BOX

Alteration Nº 205

26-5-26
This drawing supersedes drawing M44.

VICTORIAN RAILWAYS
TERMINAL BOX
FOR LEAD COVERED CABLE
20 to 128 pair
ASSEMBLY
26-5-26

Chief Eng Sigs & Tels | Drawn from Sample | Traced by E.A.

B589

L.125/27

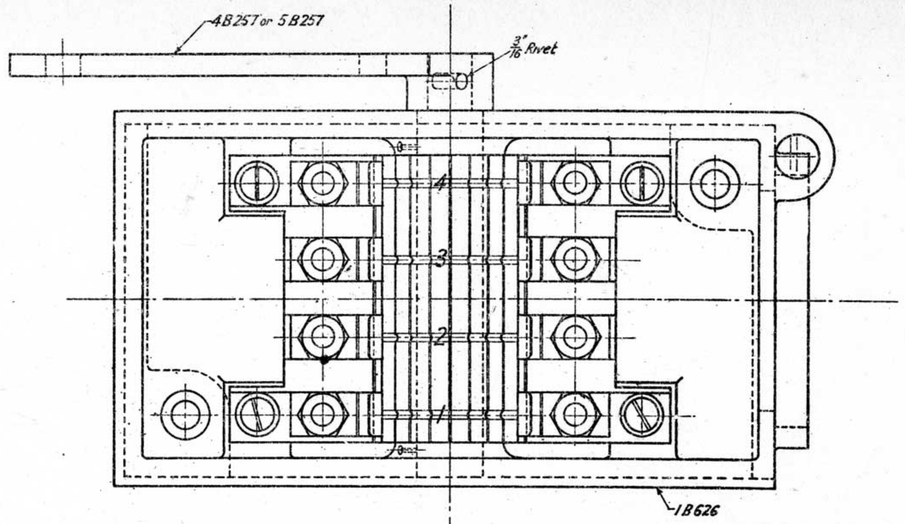

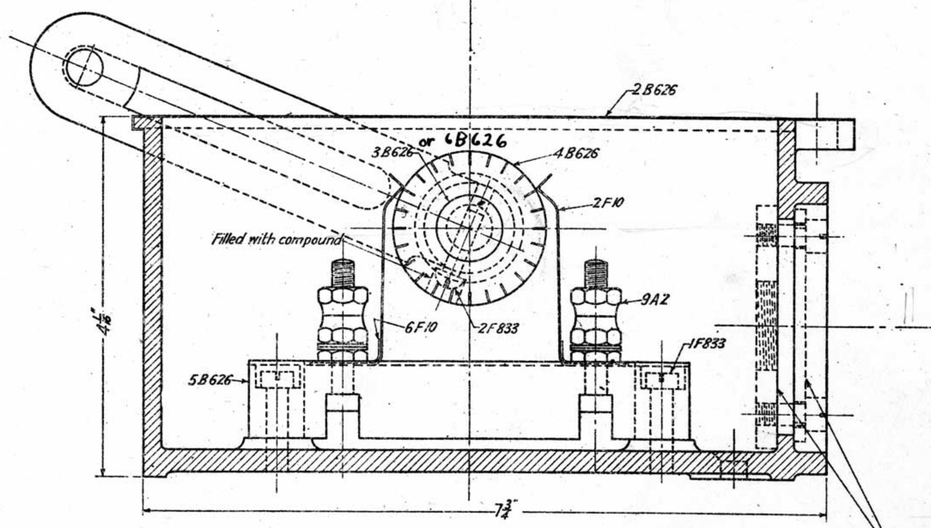

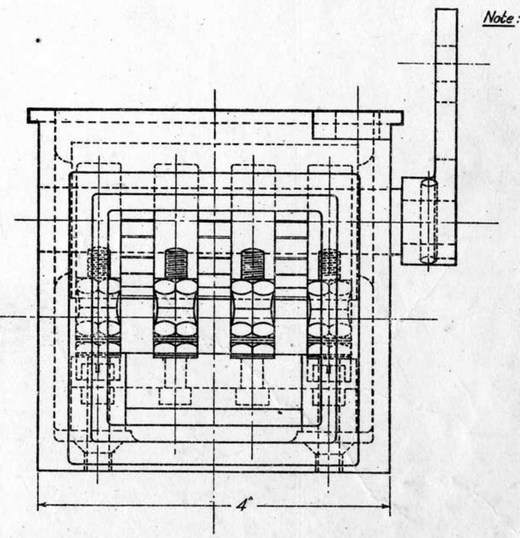

Note:- When ¾" Pipe is used order Plate 12B257.
" 1½" " " " " 11B257.
" 1" " " " " 10B257.

COMBINATIONS			
Nº	For Signal	Nº	For Interlocking Lever
1B625	As Circuit Controller.	5B625	As Circuit Controller.
2B625	" " " & Pole Changer.	6B625	" " " & Pole Changer.
3B625	" Repeater Pole Changer.		
4B625	" Pole Changer & Repeater Pole Changer.		

Nº	Name	Material	Quantity					
			1B625	2B625	3B625	4B625	5B625	6B625
1B626	Case	C.I.	1	1	1	1	1	1
2B626	Cover	Sheet I.	1	1	1	1	1	1
3B626	Shaft	M.S.	1	1	1	1	✗	✗
4B626	Contact Roller	Imp Wood	1	1	1	1	1	1
5B626	Insulating Base Canvas Bakelite	Compound	1	1	1	1	1	1
4B257	Slotted Arm	Brass MC1	1	1	1	1		
5B257	Arm	" "					1	1
9A2	Binding Post-1½" long-screwed 1¼"	Brass	8	8	4	8	8	8
2A69	Contact Bands	Phos Bronze	4	2			4	2
8A69	" "	" "		1		1		1
9A69	" "	" "		1		1		1
10A69	" "	" "				1		
11A69	" "	" "			1	1		
2F10	Contact Spring	" "	8	8	4	8	8	8
6F10	" " Keeper.	" "	8	8	4	8	8	8
1F833	Screw-0BA-1" long-screwed ½"	M.S.	4	4	4	4	4	4
2F833	" -2BA-¾" long	"	1	1	1	1	1	1
6B626	Shop F.C.						1	1

Note:-
In combinations 2B625 & 6B625 Pole Changer contacts to be applied to contact bands 1 & 2.
In combination 3B625 Repeater Pole Changer contacts to be applied to contact bands 2 & 3.
In combination 4B625 Pole Changer contacts to be applied to contact bands 1 & 2; & Repeater Pole Changer contacts to be applied to contact bands 3 & 4.

See Blueprint for alteration No 9A2 5B626 6B626 4B257

This drawing supersedes B256 dated 24-3-19.

VICTORIAN RAILWAYS
CIRCUIT CONTROLLER
4-WAY
ASSEMBLY
13-11-26

Chief Engr Sigs & Tels: [illegible]
Drawn by E.C.M.
Traced by E.C.M.

B625

L.155/27

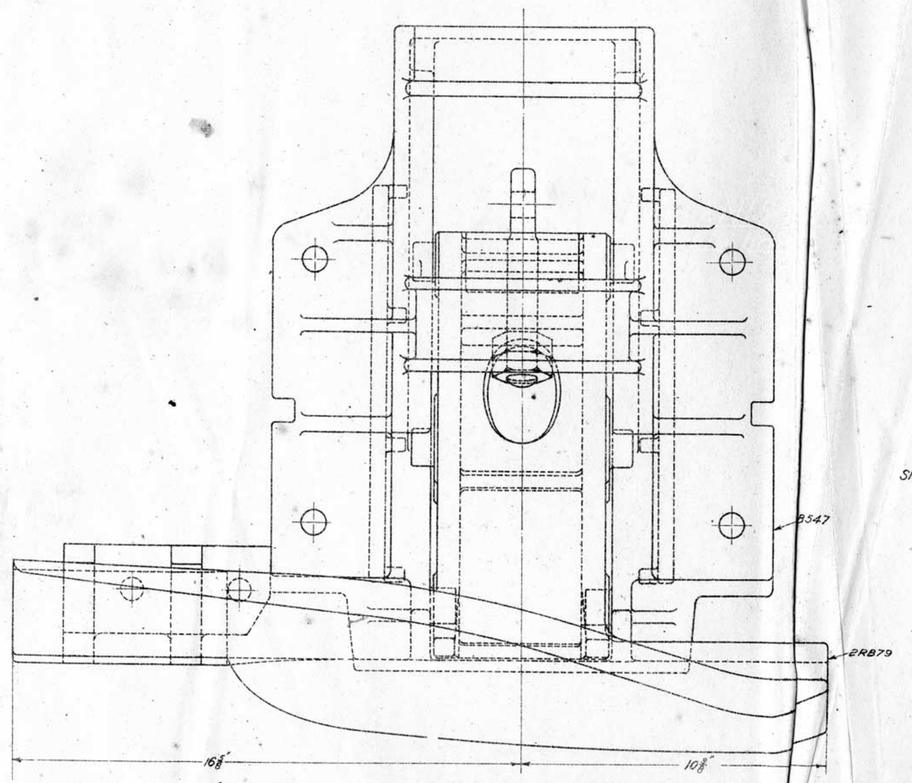

'DERAIL. General Assembly (as applied to 80lb. rail)

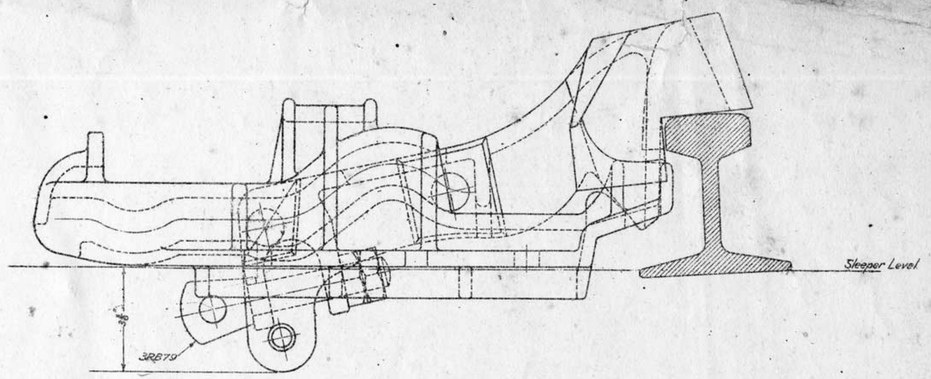

Side Elevation (clip removed)

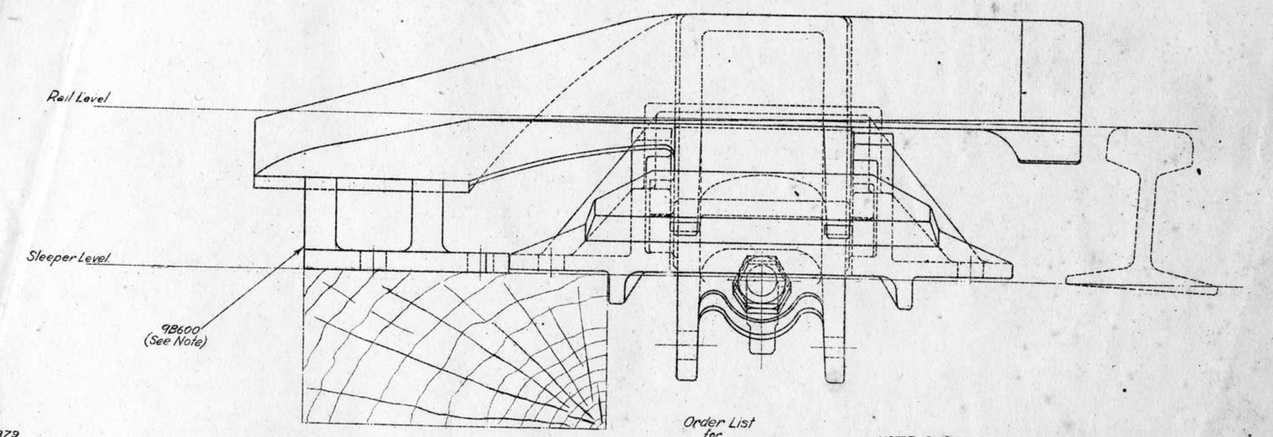

NOTES:-

Support not to be fitted until derail is in correct position according to D^cg F1978.
Right or Left hand location & weight of rail to be stated when ordering.
Operating Travel 6½"

Order List for Supports (Including Coachscrews)

Weight of Rail	L.H.	R.H.
100 lb	11B600	12B600
80 "	9B600	10B600
75 "	7B600	8B600
66 "	5B600	6B600
60 "	3B600	4B600
50 "	1B600	2B600

NOTE. SURPORTS TO BE ORDERED SEPARATELY

Nº	NAME	Mat^l	1RB78	2RB78
1B547	Cradle	C.S.	1	1
1RB79	Tongue	"	1	—
2RB79	"	"	—	1
3RB79	Operating Lug	M.S.	1	1
Stock	Coach Screws ¾" dia. 5" long	—	4	4

Derail without Support Right Hand 2RB78.
" " " Left Hand 1RB78.

12-5-26 Alteration Nº 137	11-11-25 Alteration Nº 126	VICTORIAN RAILWAYS DERAIL (TYPE 'E') ASSEMBLY Scale 8"=1' 5-2-25	Chief Eng. for Sign. Tele.	Drawn by L.J.P.	Traced by L.J.P.

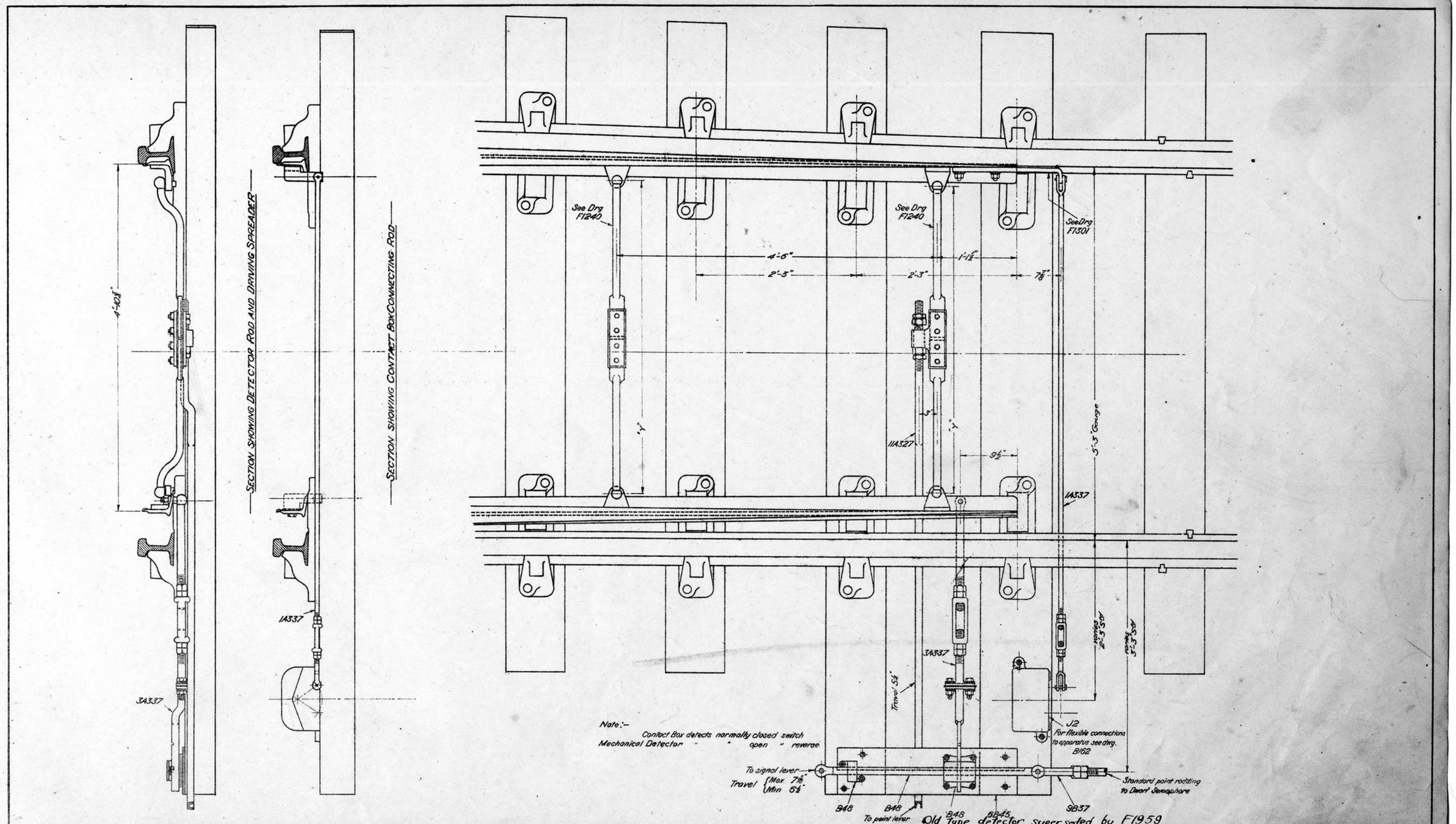

REDRAWN 8·9·23 Original Title Point Detection Typical Arrangement for Layout Class "X" 3A337 previously 6H122 1A337 " 1H122 11A327 " 3B41 1C9, 2C9, 5C9 & 6C9 transferred to dwg. F1268.	VICTORIAN RAILWAYS. T.P. LAYOUT CLASS "X" DIRECT ROD OPERATION WITH ELECTRICAL & MECHANICAL DETECTION 8·9·23.	Chief Eng'r of Sigs & Telec.	Drawn by J.A.M. / Traced by G.W.S
		C9	

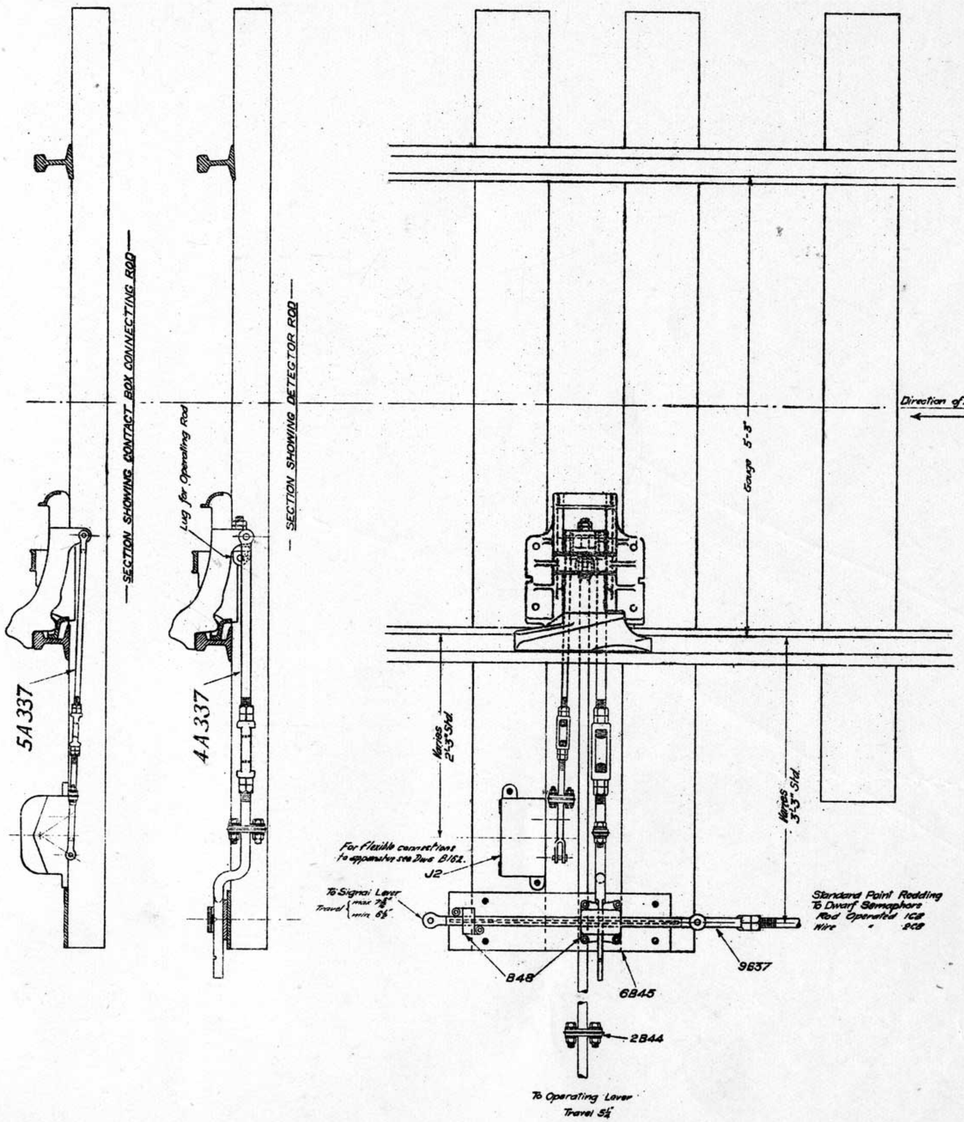

HAYES DERAIL WITH MECHANICAL AND ELECTRICAL DETECTION 5B
" " WITH ELECTRICAL DETECTION ONLY 5C

QUANTITIES AS ORDERED ON MATERIAL LIST

Nº	NAME	SUPPLIED BY
—	Special Sleeper 10" × 5" × 11'-0" long	Per Way
J2	Point Contact Box 1, 2, 3, 4, or 5J2 as specified	Eng. of Signals
6B45	Foundation Plate	" "
1B48	Single Slide Detector	" "
9B37	1¼" Adjusting Jaw welded to Point Rodding at Detector	" "
Stock	Fixing Coach Screws	" "

NOTE :- Alterations required to moving portion of Derail as follows :-
Under lug on approach side of derail, R. or L. Hand, to be machined and drilled to take standard 1¼" solid jaw connection 2B38.
Under lug on far side of derail, R. or L. Hand, to be machined and drilled to take standard ¾" solid jaw connection 1B38.

Operating Rod to be insulated by joint 2B44 where not at present insulated.

3 — 29-9-19 Part Nº 2H122 previously 1C17 " 7H122 " 2C17	2 — 10-10-17 Detector shown for rod or wire operated Dwarf Semaphore	1 — 7-3-17 List of Parts revised "Quantities as ordered on Material List" added	REFERENCE:- Left Hand Derail shown.
F.J.M.	S.C.B.		

VICTORIAN RAILWAYS
HAYES DERAIL
DETECTION LAYOUT

Drawn by J.A.M.
Traced by J.A.M. [illegible]
Checked by [illegible]

Engineer of Signals

C17

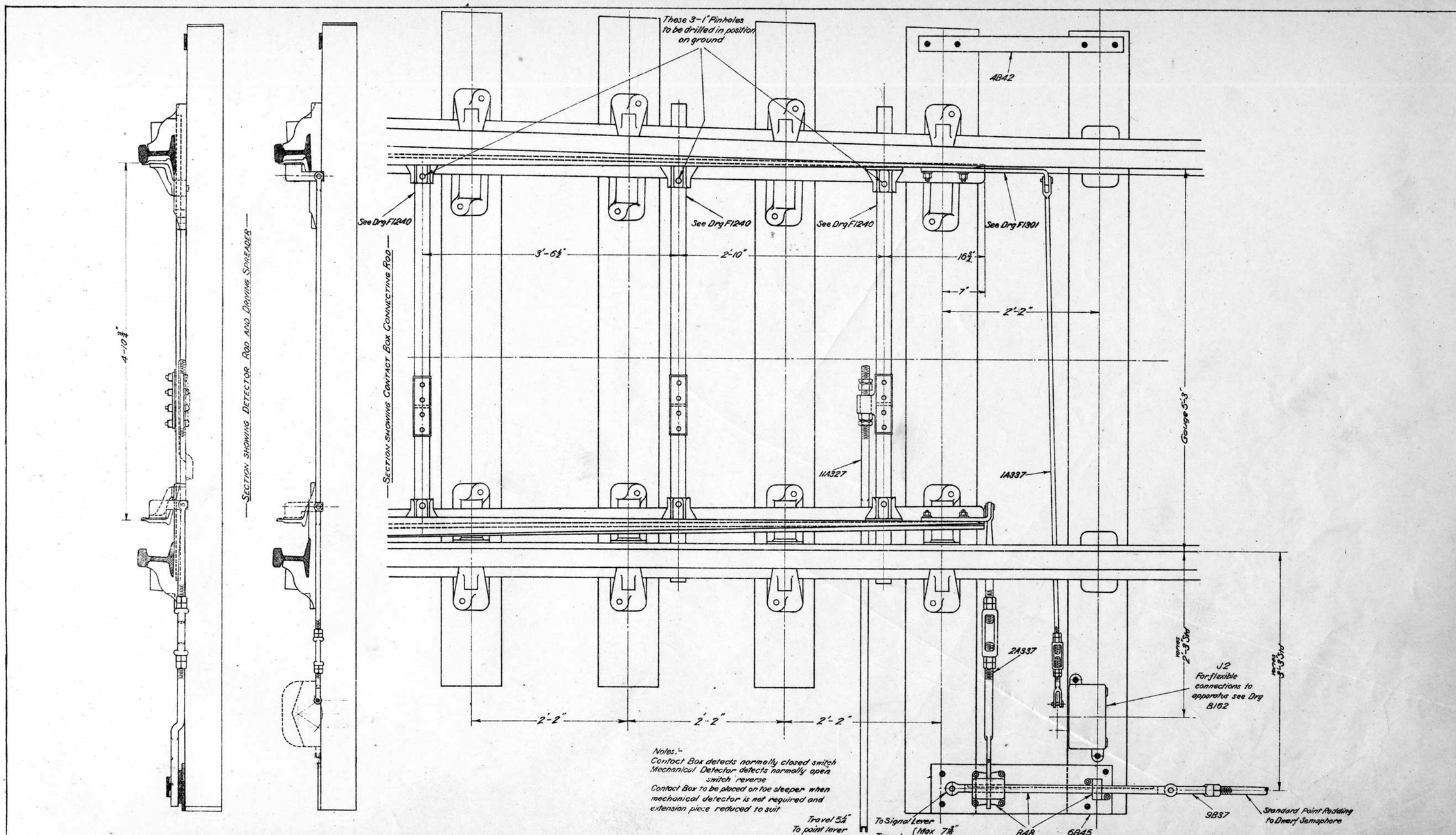

Redrawn 29·9·23 Original Title Point Detection Typical Arrangement for Layout Class "Y" 2A337 previously 5H122 1A337 " 1H122 11A327 " 3B41	VICTORIAN RAILWAYS TRAILING POINT LAYOUT CLASS "Y" DIRECT ROD OPERATION WITH ELECTRICAL & MECHANICAL DETECTION 29·9·23	Chief Eng of Sigs & Telegs	Drawn by J.A.M. / Traced by G.W.S.

C18

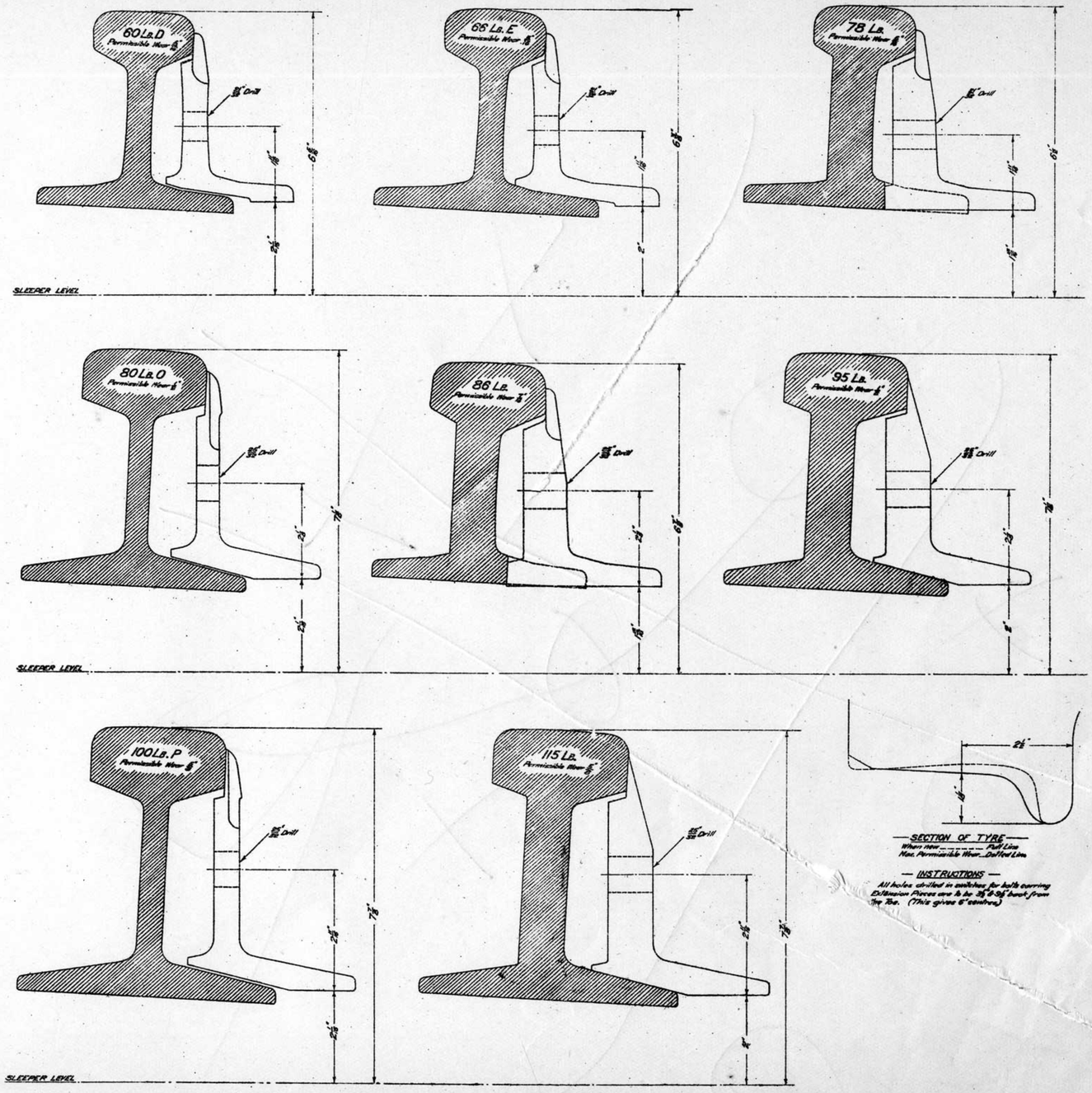

NOTE:- Sections traced from Drg. PW--537 A - 31

VICTORIAN RAILWAYS
POINT SECTIONS AT TOE

12-4-17

Engineer of Signals

Drawn by
Traced by S.C.D.
Tracing

C21

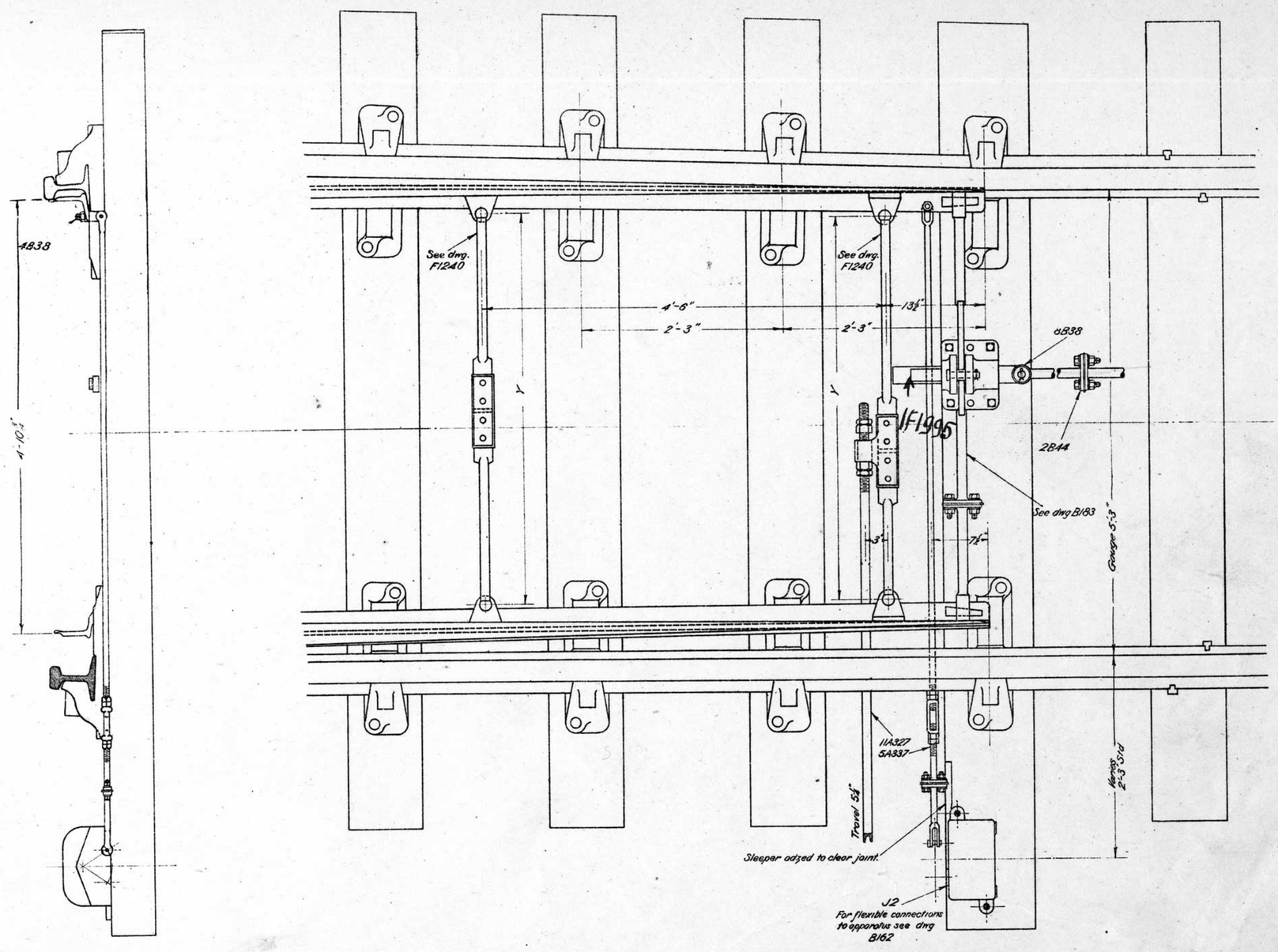

REDRAWN 9-10-23 Original Title Point Detection Arrangement of Facing Points Layout Class 'X' 5A337 previously 2H122 11A327 " 3B41	VICTORIAN RAILWAYS. F.P.LAYOUT CLASS "X" DIRECT ROD OPERATION INDEPENDENT PLUNGER AND ELECTRICAL DETECTION 9-10-23	Chief Eng'r of Signal Tels	Drawn by J.A.M.	Traced by G.W.S.
				C30

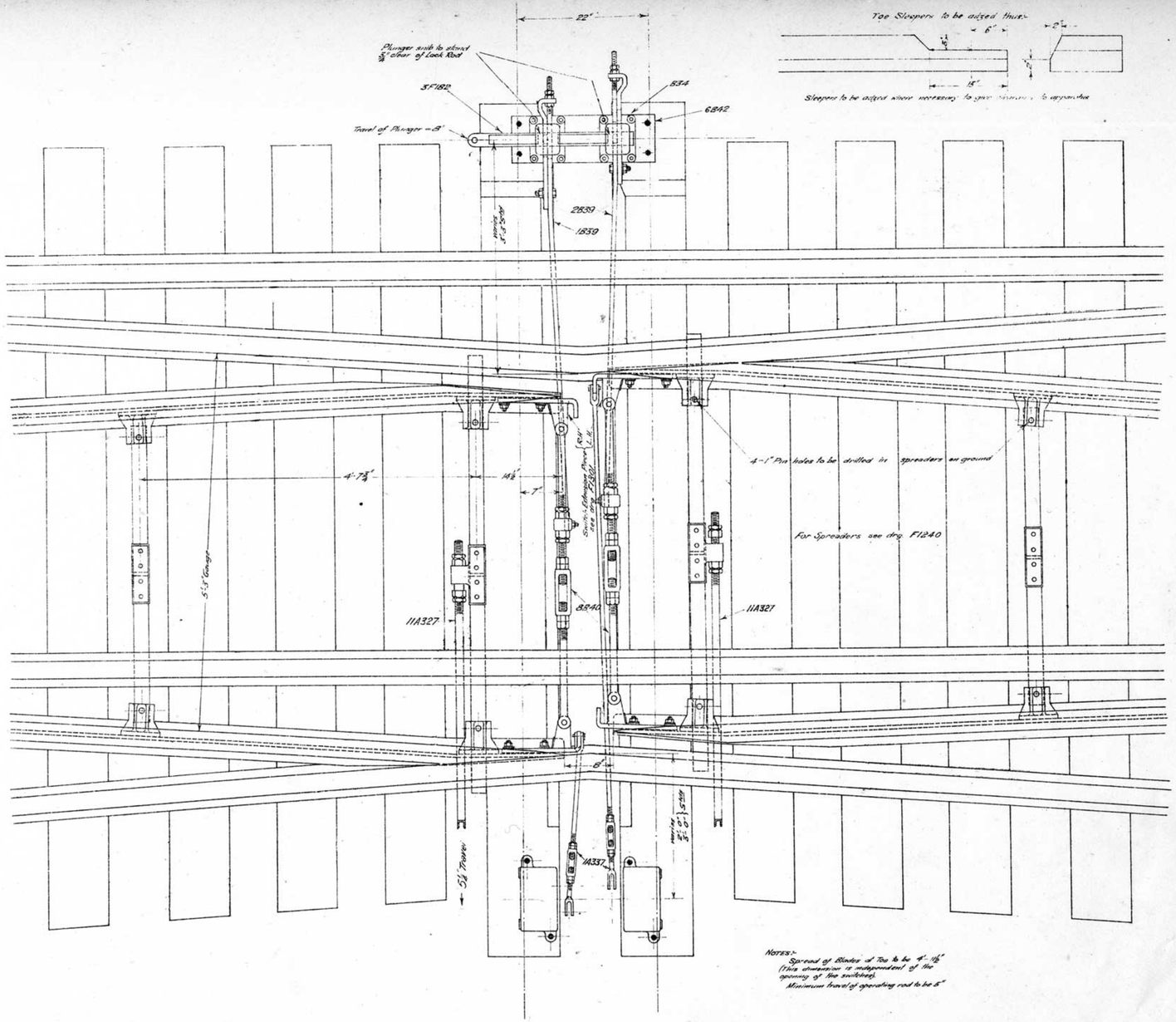

NOTES:-
Spread of Blades at Toe to be 4'-11 1/2"
(This dimension is independent of the opening of the switches).
Minimum travel of operating rod to be 5"

2	15-10-70	1	29-9-19
Part No. revised to date.		Part 1A122, previously 1C31.	

VICTORIAN RAILWAYS
MOVABLE POINT FROG
DIRECT MECHANICAL OPERATION
LAYOUT CLASS Y

12-6-18

Engineer of Signals

Drawn by J.A.K.
Traced by S.C.O.

C31

L.211/25

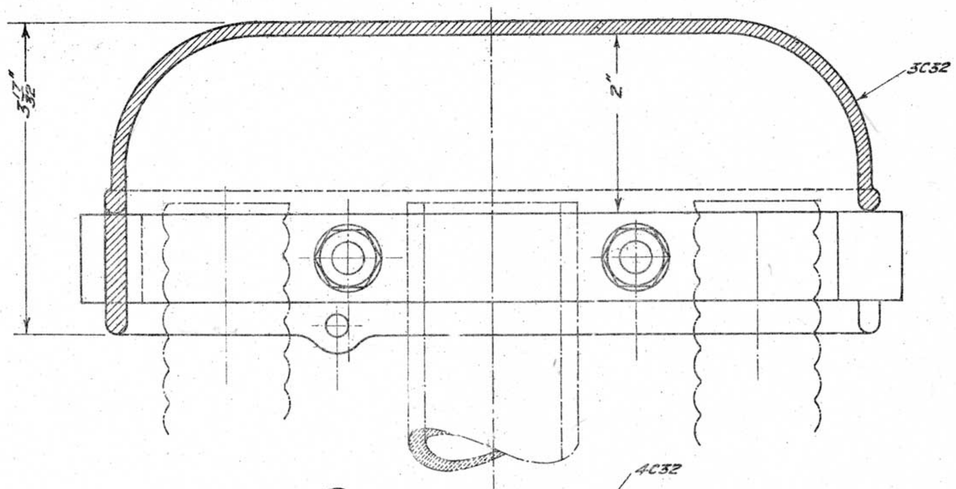

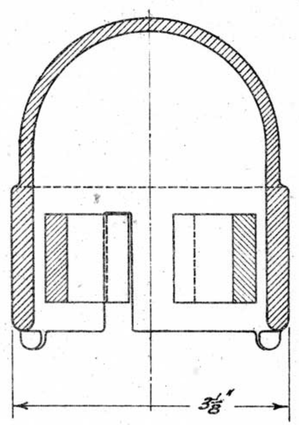

Nº	Name	Material	Quantity 1C32	Quantity 2C32
3C32	Cover	C.I.	1	1
4C32	Clip	M.S.	2	-
5C32	Clip	"	-	2
Stock	3/8"x1 1/2" Bolt & Nut and Spring Washer		2	2
	1/4" Split Pin 4" long		1	1

Stores
Section _____
Item Nº _____

24-6-18

DISTRIBUTOR COMPLETE FOR 1" FLEX. CONDUIT

FOR 1 1/2" PIPE 2C32
" 1" " 1C32

Refer to Blueprint.

VICTORIAN RAILWAYS
WIRE DISTRIBUTOR
FOR
TRACK APPARATUS
24-6-18

Engineer of Signals

Drawn by J.A.M.
Traced by S.C.O.

C32

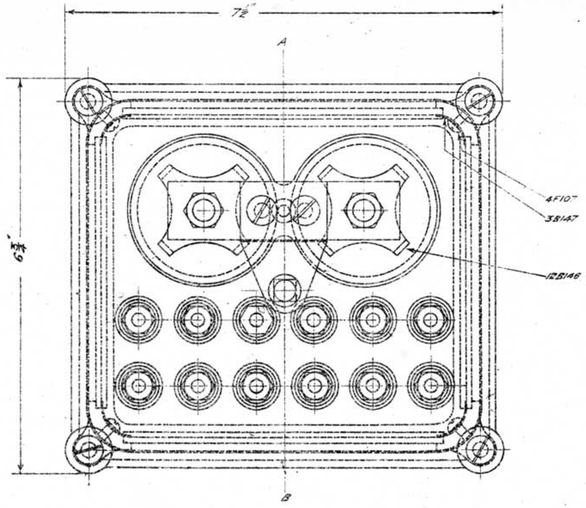

PLAN

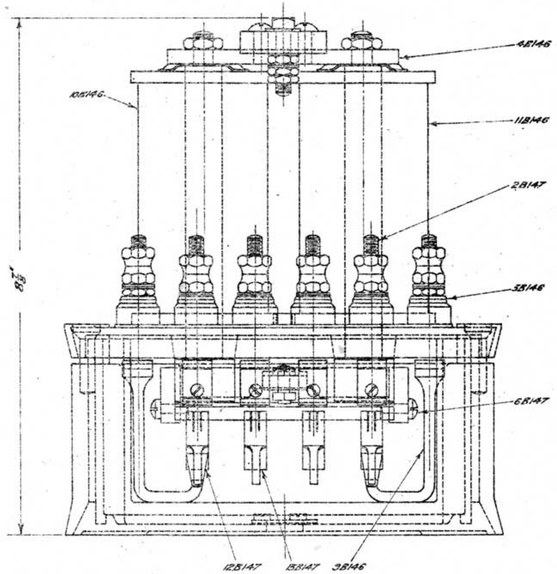

FRONT ELEVATION

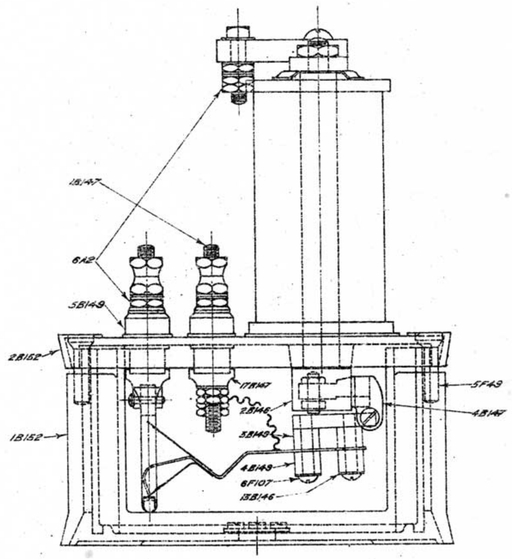

END ELEVATION

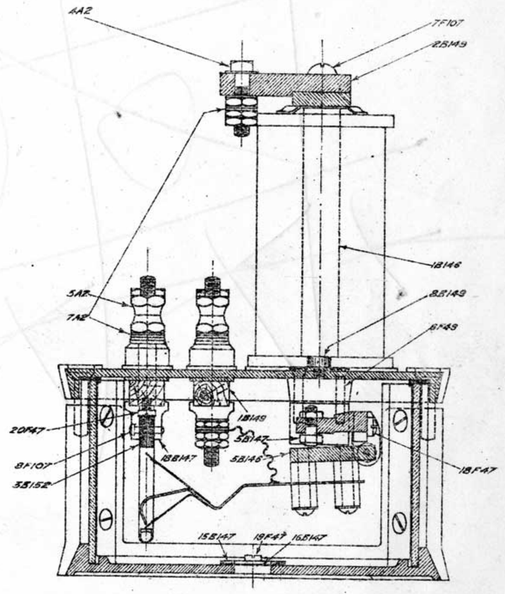

SECTION AB

4 WAY RELAY COMPLETE 1C33

No	NAME	MATERIAL	QUANTITY	No	NAME	MATERIAL	QUANTITY
1B152	Base	Aluminium Alloy	1	4B146	Magnet Yoke	Smooth Iron	1
15B147	Retaining Ring – for Ventilator	Brass	1	2B149	Terminal Bracket	Fibre	1
16B147	Gauge – " "	"	1	7F107	Fixing Screw – for Terminal Bracket	Brass	2
19F47	Fixing Screw – " "	"	3	4A2	Bolt, 1⅛" long, Screwed ⅜" – Coil Junc^n Term^n	"	1
3B147	Clip – " Glass	"	4	4B147	Armature Bracket	"	1
4F107	Fixing Screw – " Clip	"	8	18F47	Fixing Screw – for Armature Bracket	Hard Steel Packing	2
2B152	Top	Aluminium Alloy	1	6B147	Pivot Screw	Hard Steel Packing	2
1B149	Terminal Base	Hardwood	2	5B147	Adjusting Screw – for Armature	Brass	1
5B149	" Bush	"	12	5B146	Armature	Smooth Iron	1
9B146	Back Contact Terminal Screw (Silver Contact)	Brass	2	3B149	Bush for Contact Finger	"	8
3B146	Bevel Washer	"	2	4B149	" " "	"	8
2B147	Front Contact Terminal Screw	"	4	13B146	Washer " " "	Brass	8
18B147	Carbon Holder	"	4	6F107	Fixing Screw " "	"	8
20F47	Fixing Screw – for Carbon Holder	"	4	13B147	Contact Finger – front	—	2
3B152	Contact Piece	Carbon	4	12B147	" " – Front & Back	—	2
8F107	Fixing Screw – for Contact Piece	Brass	4	5F49	Fixing Screw Top to Base Max sealed	Brass	4
1B147	Terminal Screw	"	6	Stock	Yoke Clamp Nut – ⅜ Nut ⅝ Thick edges rounded	M.S.	2
17B147	" Lock	"	6	"	Glass 26 oz – 3⅞" x 3⅞" Bottom & Sides	Glass	2
5A2	Bonding Nut	"	24	"	" – 4⅝" x 3⅞" to be putted	"	2
6A2	Clamp Nut – Both edges rounded	"	23	"	Gasket ¼" thick ⅝" wide approx. length 2'-2"	Felt	
7A2	Washer	"	42		All metal parts other than brass to be		
2B146	Pole Piece	Smooth Iron	2		treated with Aluminium Paint		
6F49	Fixing Screws – for Pole Piece	Brass	4				
1B146	Magnet Core	Smooth Iron	2				
10B146	Bobbin complete L.H. Wound as specified	—	1				
11B146	" " R.H. " " "	—	1				
8B149	" Stop	Fibre	1				
12B146	Yoke Washer	Brass	2				

VICTORIAN RAILWAYS

D.C. RELAY

4-WAY

GENERAL ASSEMBLY

19-3-18

Engineer of Signals

Drawn by V.G.C.

Traced by S.C.O.

C33

L190/25

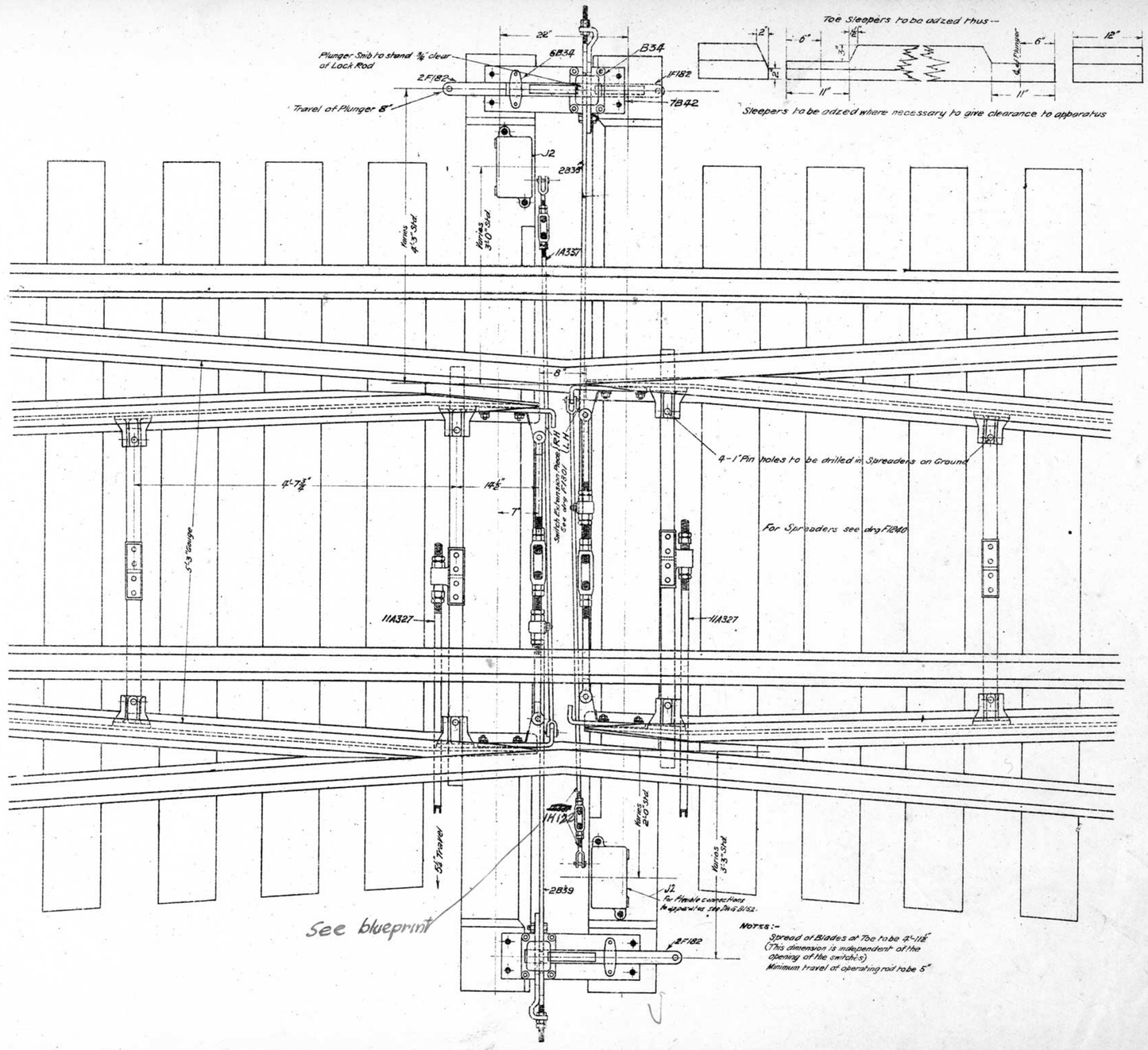

VICTORIAN RAILWAYS
MOVABLE POINT FROG
DIRECT MECHANICAL OPERATION
LAYOUT CLASS Y.
7.5.18
Engineer of Ways

Drawn by E.G.C.
Traced by E.G.C.

C34

L.190.25

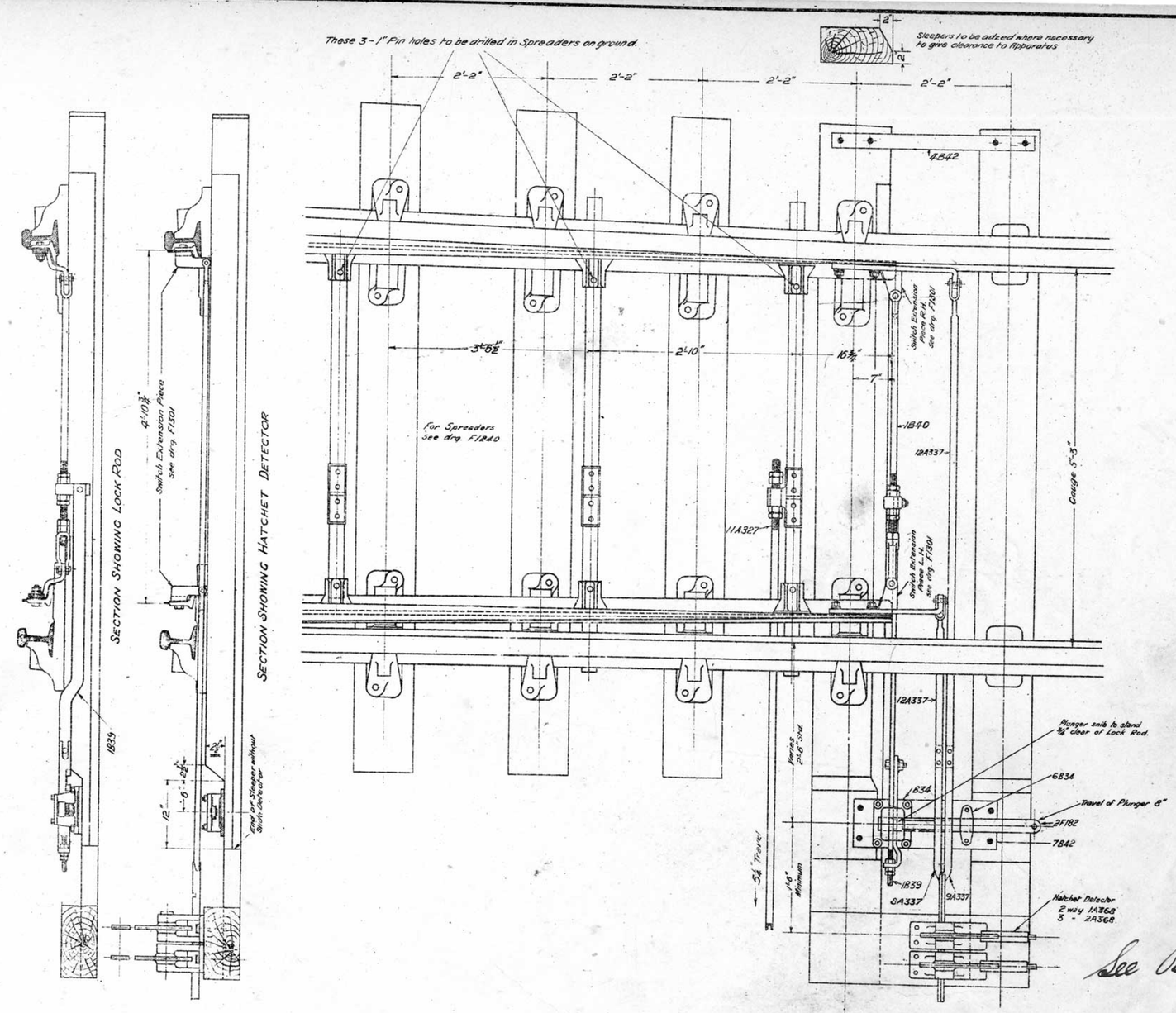

See Blueprint Part No.

Revised.

VICTORIAN RAILWAYS
FACING POINT LAYOUT
HATCHET DETECTOR
INDEPENDENT PLUNGER
Layout Class "Y"

Drawn by F.C.C.
Traced by F.C.C.

C38

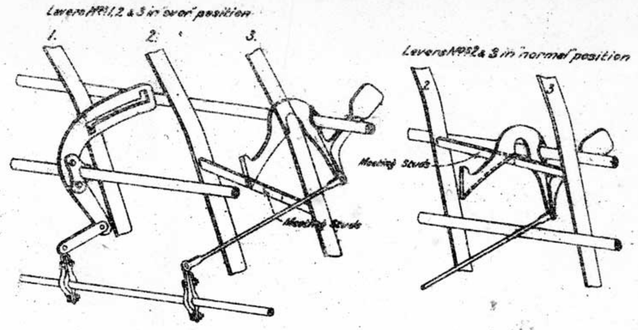

Block Facing Point Lock

Note. This Lock has no Locking action at back of Lock which is fitted up. By using this lock a shaft, cam & cam links are saved.

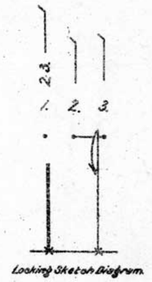

Locking Sketch Diagram.

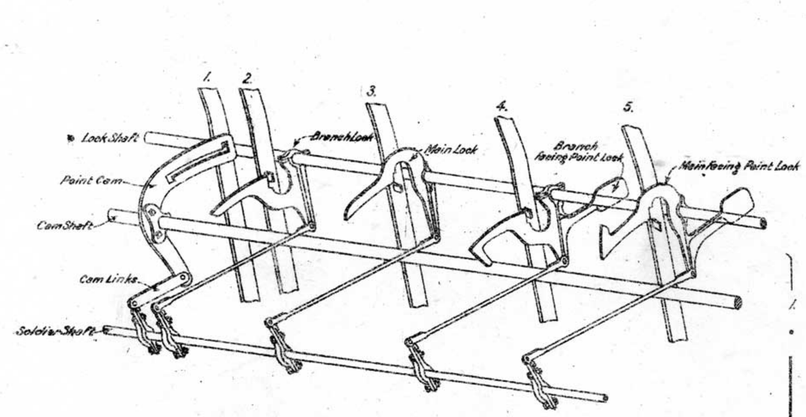

Various Locks. All Levers in normal positions.

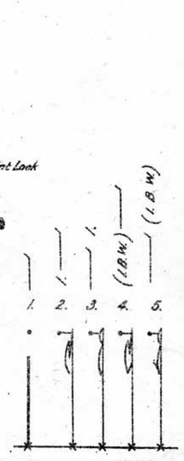

Locking Sketch Diagram

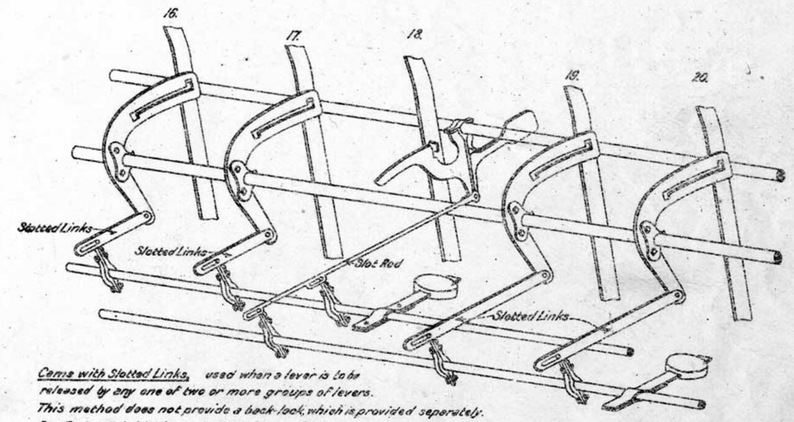

Cams with Slotted Links, used when a lever is to be released by any one of two or more groups of levers. This method does not provide a back-lock, which is provided seperately. See Facing Point Locks on Locking Sketch Diagram.

All Levers in normal position.

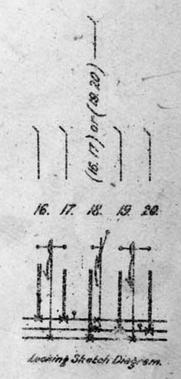

Locking Sketch Diagram.

SIGNAL & TELEGRAPH BRANCH V.R

SPECIAL EXAMPLES OF CAM & ROCKER LOCKING

Sheet No.1.
(2 Sheets)

C95

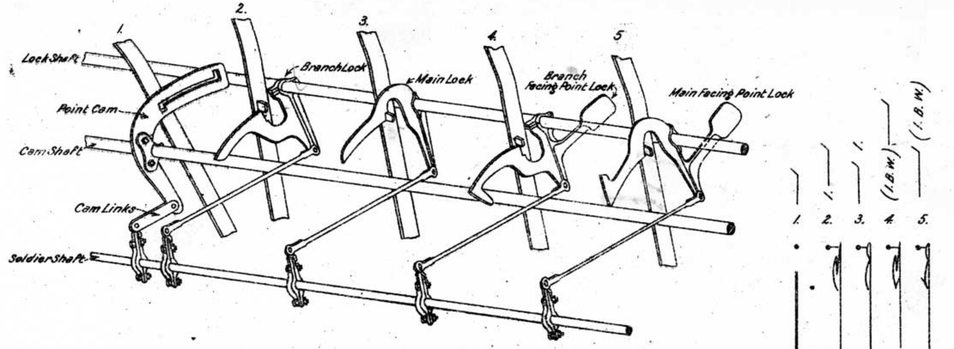

Various Locks. Point Lever over & Locks operated.

Locking Sketch Diagram

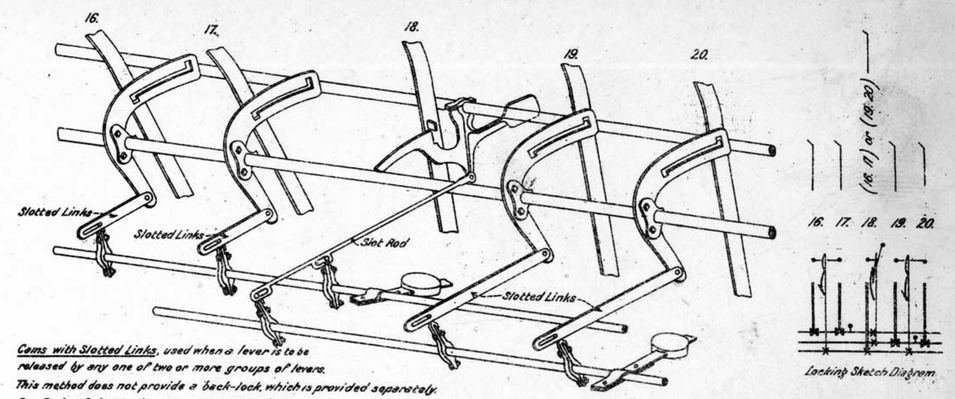

Cams with Slotted Links, used when a lever is to be released by any one of two or more groups of levers. This method does not provide a "back-lock, which is provided separately. See Facing Point Locks on Locking Sketch Diagram.

Nos 16 & 17 Levers "over" 18, 19 & 20 normal.

Locking Sketch Diagram

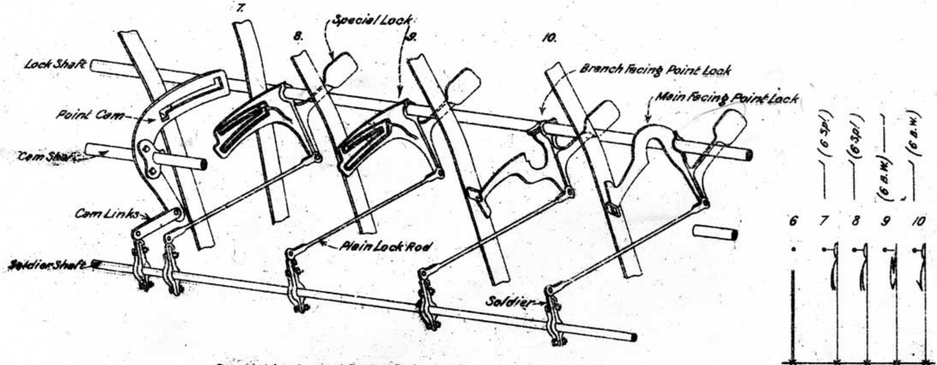

Special Locks and Facing Point Locks

Nos 6. 8. 9 & 10 Levers "over". No 7 Lever "normal."

Locking Sketch Diagram

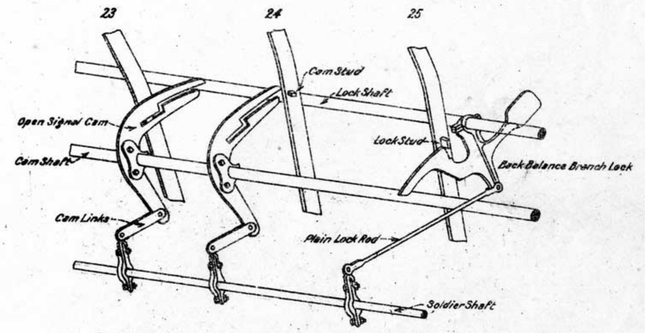

Open Signal Cams – Used when more than one Home Signal releases a Distant Signal.

Locking Sketch Diagram.

SIGNAL & TELEGRAPH BRANCH V.R

SPECIAL EXAMPLES OF CAM & ROCKER LOCKING

Sheet No. 2. (2 Sheets)

C95

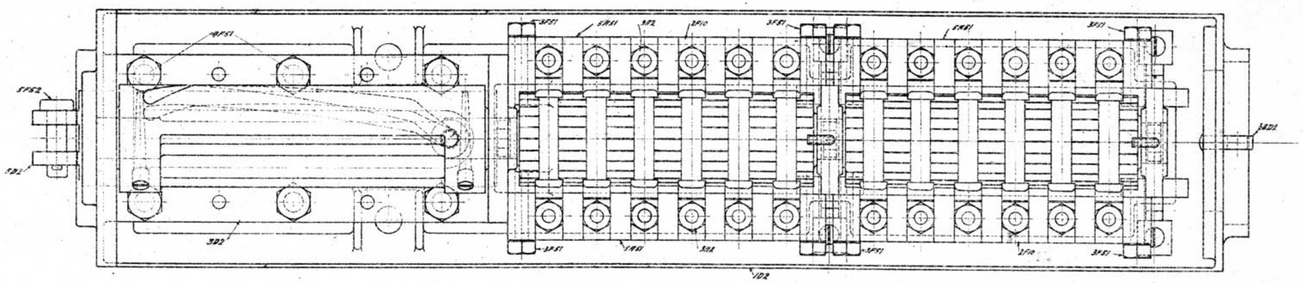

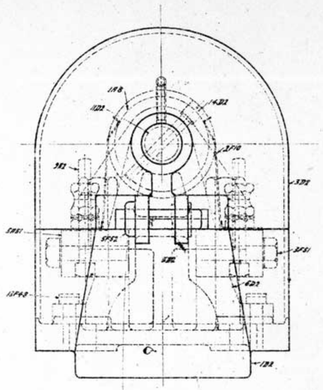

Front Elevation

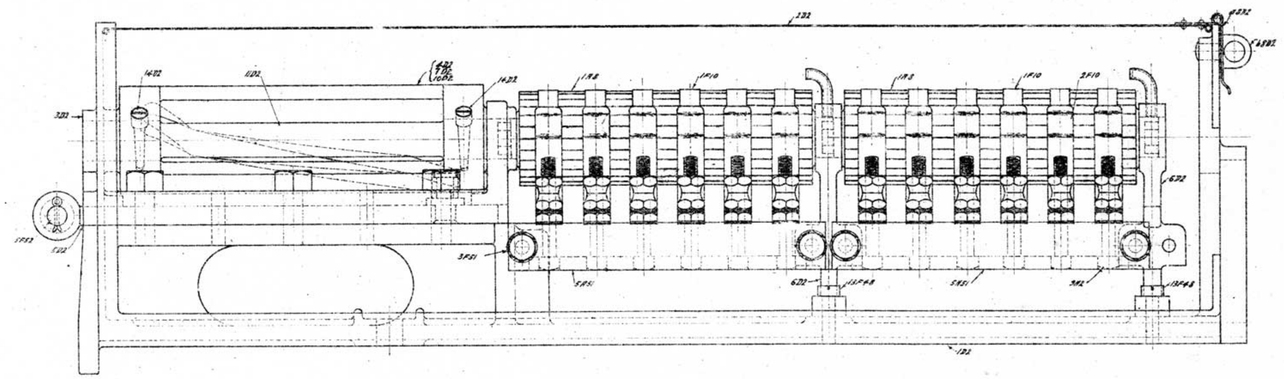

Side Elevation
Assembly 18D2

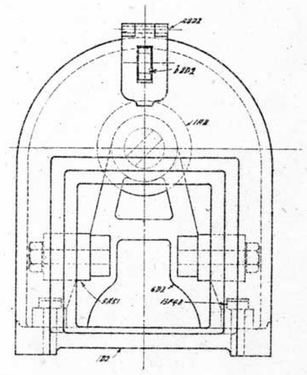

Back Elevation

Stores
Section _____
Item Nº _____

For Circuit Controller for 6 Contacts order - 17D2
" " " " 12 " " - 18D2
" " " " 18 " " - 19D2

VICTORIAN RAILWAYS
CIRCUIT CONTROLLER
FOR
MECH^L INTER^LOC APPARATUS
~~Scale Full Size~~

Engineer of Signals

D2

L.193/25

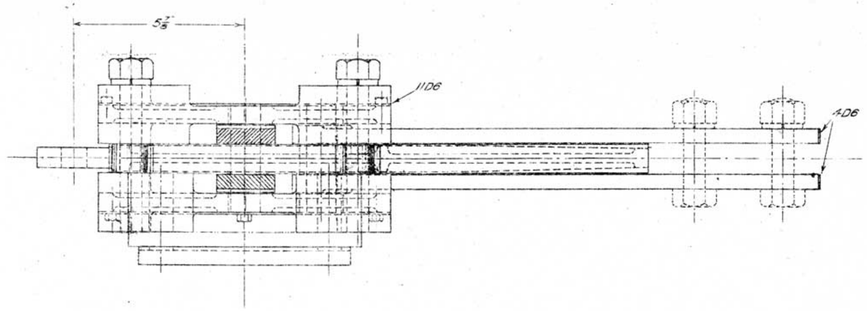

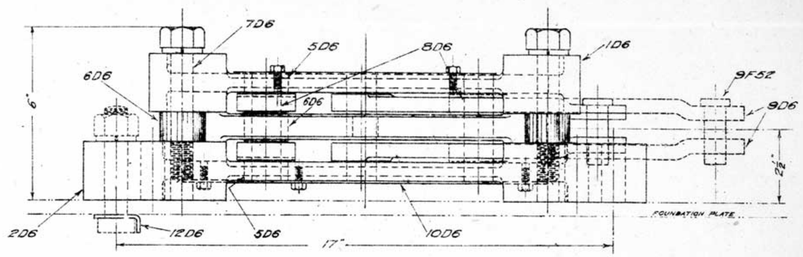

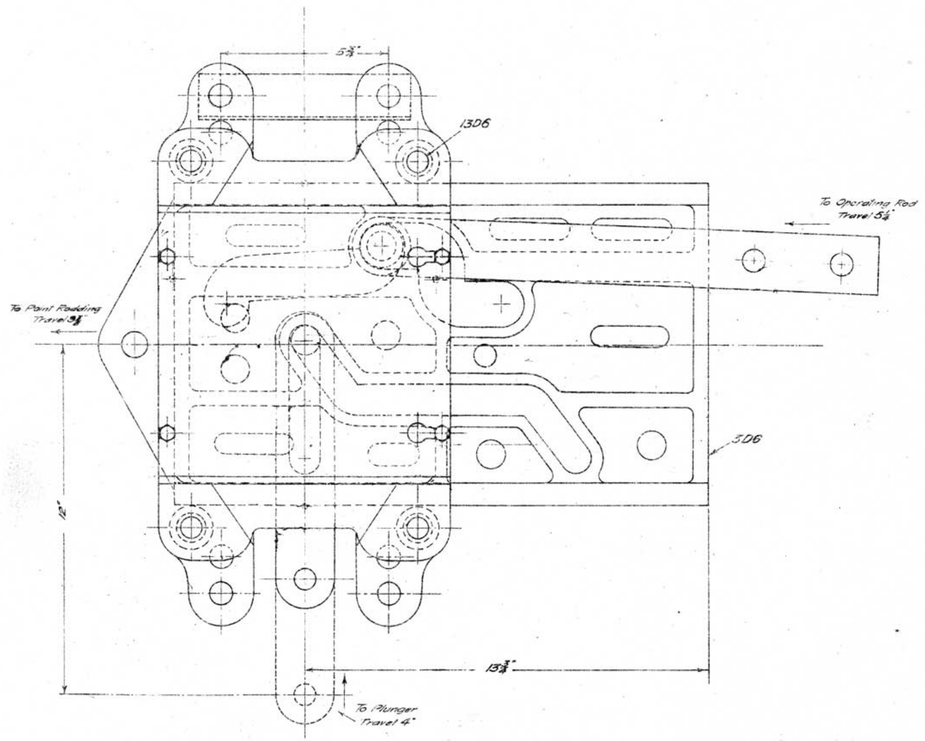

Stores
Section _____
Item No _____

LIST OF PARTS

No	NAME	MATERIAL	QUANTITY
1 D6	Top Guide Plate	Mal. C.I.	1
2 D6	Bottom " "	" "	1
3 D6	Motion Plate	" "	1
4 D6	Operating Rod Link	M.S.	2
5 D6	Roller for Guide Plate	"	2
6 D6	" " Motion Plate and Stud	"	5
7 D6	Set Screw Machined with Spring Washer	"	4
8 D6	Guide Pin	"	2
9 D6	Plunger Link	"	2
10 D6	Bottom Cover Plate	⅜" Sheet Iron	1
11 D6	Top " "	⅜" " "	1
12 D6	Bolt Keeper	⅜" W.I.	1
9 F52	Pin 2" long	M.S.	1
Stock	⅝" x 3" Machined Bolt and Spring Washer	——	2
13D6	Distance Piece "	M.S.	4
Stock	⅝" x 3½" Sq. Head Bolt and Spring Washer	——	2
"	⅝" x ⅝" Set Screws	——	8

Note:- The apparatus is shown built up for a Left Hand Location. By reversing the Bottom Guide Plate, 2D6, the same parts can be reversed to suit a Right Hand Location.

VICTORIAN RAILWAYS
SWITCH & LOCK MOVEMENT
Type "A"
General Arrangement
23-3-17

D6

L.170/25

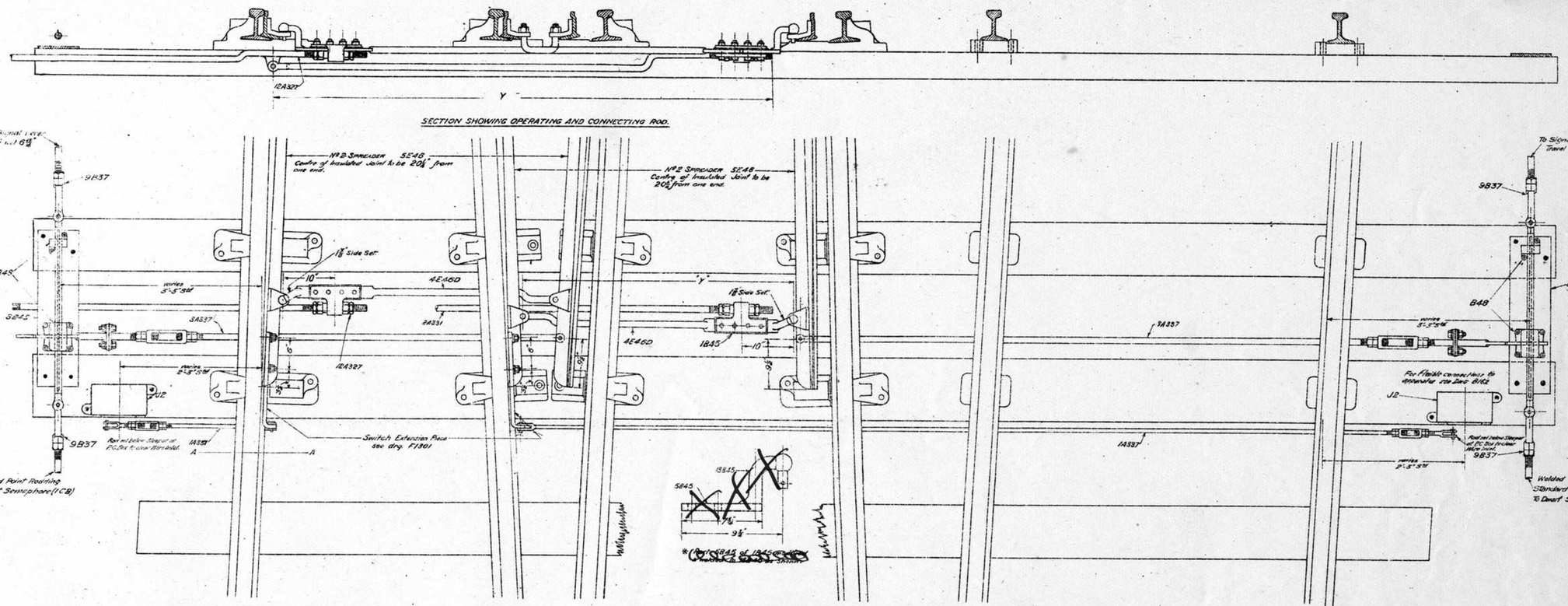

Part No	Weight of Rail. 100 & 115 lbs.	80, 96, & 95 lbs.	60, 66, & 75 lbs
5E46 & 6E46	Y - 4'-5"	Y - 4'-6"	Y - 4'-7"
5E46 & 6E46D	Y - 8'-0"	Y - 8'-0"	Y - 7'-9"
5E46 & 7E46	Y - 4'-5⅜"	Y - 4'-6⅜"	Y - 4'-7⅜"
2A331	Y - 8'-0"	Y - 8'-0"	Y - 7'-9"

— QUANTITIES AS ORDERED ON MATERIAL LIST —

PART No	NAME	Supplied by
–	Toe Sleeper 12'-6" length To suit	Trg. Dept
–	Sleeper in Advance No 1 Sleeper To suit	Engg Dept
	Insulated Spreaders	
* 4E46	No 1 Spreader (1384B, 1845, 4845) length "Y" (To suit weight of Rail (Without Base))	Engg Dept
* 6E46D	No 1 Spreader (1384B, 1845, 4845) length "Y" (To suit weight of Rail (With Base Plate))	Engg Dept
5E46	No 2 Spreader (5845 Pair) length "Y" To suit weight of Rail. Switch Extension Piece L.H. R.H. as ordered To suit Weight of Rail	Engg Dept
Stock	--- Fixing Coach Screws	"

Non-insulated Spreaders

Part No	Name	Supplied by
6E46	No 1 Spreader (1384B, 4845) length "Y" To suit Weight of Rail (Without Base Plate)	Engg Dept
6E46D	No 1 Spreader (1384B, 4845) length "Y" To suit Weight of Rail (With Base Plate)	"
7E46	No 2 Spreader (5845 Pair) length "Y" To suit weight of Rail.	"

NOTE: Contact Box detects normally closed switch
Mechanical Detector - - open - reverse
Spread of blades at toe to be 4'-10 1/4"

1 15-10-23 Part No revised to date.	2 22-11-21 Parts 6E46, 6E46D, & 7E46 added. Alteration 19/15 added.	3 30-9-14 Part No 1384B previously 1384B - 3.W.22 / 1384B - 11.W.22 / 5845 - 12.E.6	4 8-8-18 Component Parts of 4E46 & 4E46B previously 4845, 1845, 4845	5 14-12-17 Position of Insulated Joint on 2nd Spreader entered	REDRAWN 26-3-17. List of Parts Revised. Title altered from DWARF SEMAPHORE (MECHANICAL) Typical Layout of existing Track Double Compound Earlier 06-9-17	REFERENCE

VICTORIAN RAILWAYS
POINT DETECTION
Typical Arrangement for LAYOUT CLASS X DOUBLE COMPOUND

Engineer of Signals.

Drawn by I.A.N.
Traced by W.H.V.
Checked by
E46

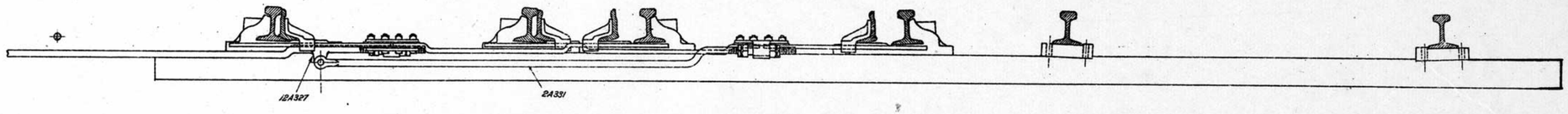

— SECTION SHOWING OPERATING AND CONNECTING ROD —

For Spreaders see drg. F1240

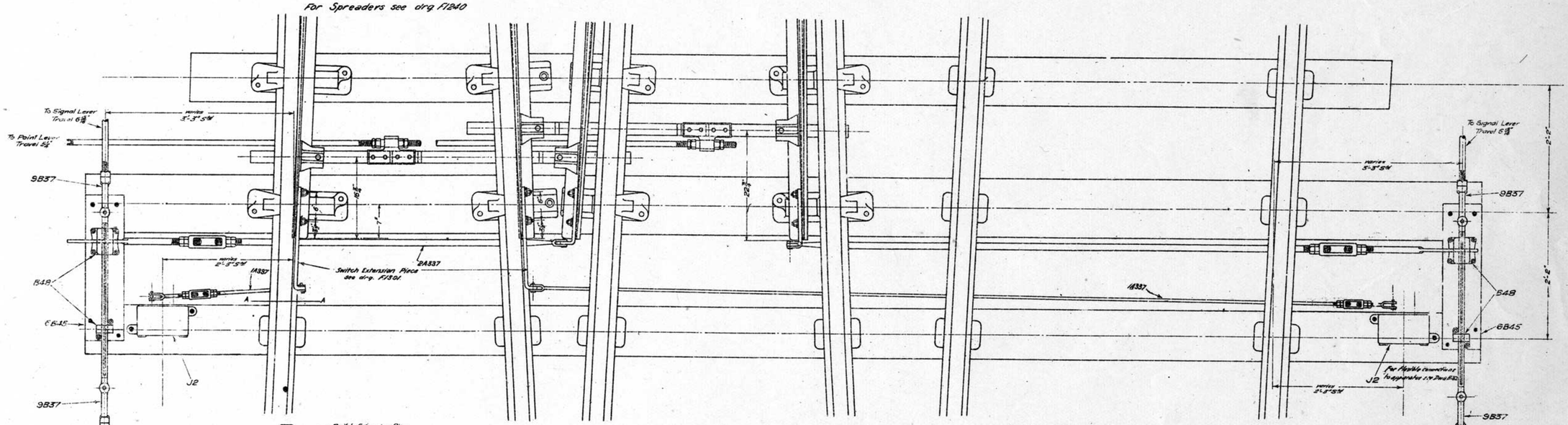

— SECTION AT AA —

— QUANTITIES AS ORDERED ON MATERIAL LIST —

PART No.	NAME		Supplied by
—	Sleeper in rear	10" × 6" × length to suit	Pier Way
—	Toe Sleeper	12" × 6" × " " "	" "
			Eng of Ops
	Switch Extension Piece as ordered To suit weight of rail.		
Stock	— Fixing Coach Screws		

NOTE.

When installing double compounds care must be taken to see that the pair of blades carrying the spreaders nearest the toe, are located on the same side as the operating rod.

Notes:-
Spread of blades at toe = 4'-10 3/4"
Contact Box detects normally closed switch
Mechanical Detector " " open " reverse
Contact Box to be placed on toe sleeper when Mechanical Detector is not required.

3	15-10-23	2	30-3-19
Part No. revised to date		Part No. 1N122, previously 9E47	
		" 5N122 " 3E47	
		" 11N122 " 1E47	
		Part 2E47 modified and operation by Switch Extension Piece added.	
		Part 3E47 cancelled	

1 27-4-18

VICTORIAN RAILWAYS
POINT DETECTION
Typical Arrangement for
LAYOUT CLASS Y
DOUBLE COMPOUND

Drawn by T.A.M.
Traced by S.C.G. S.A.
Checked by

Engineer of Signals

E47

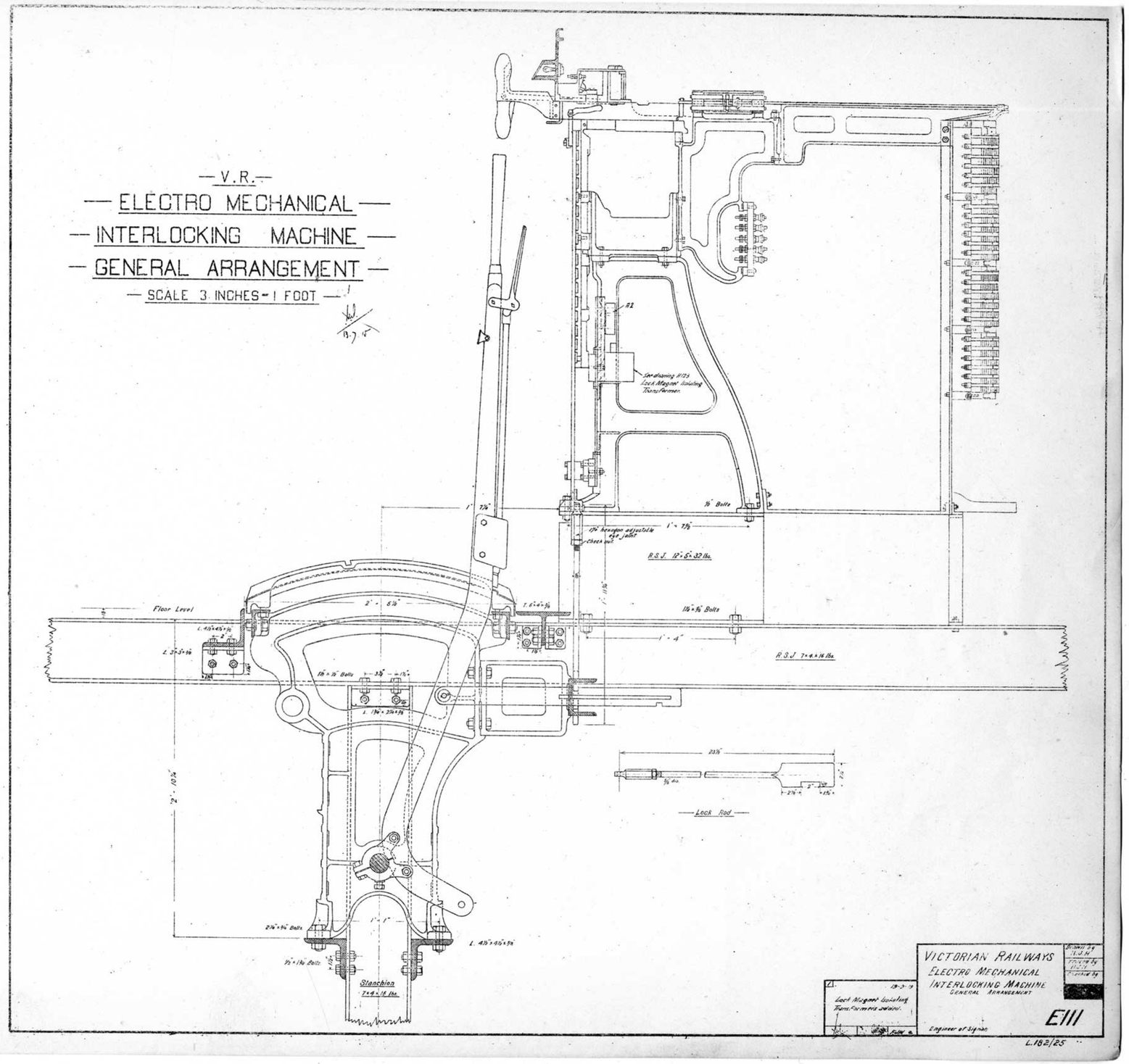

— V.R. —
— ELECTRO MECHANICAL —
— INTERLOCKING MACHINE —
— GENERAL ARRANGEMENT —
— SCALE 3 INCHES = 1 FOOT —
Floor Level
R.S.J. 12" × 5" × 32 lbs.
R.S.J. 7" × 4" × 16 lbs.
Lock Rod
Stanchion
7" × 4" × 16 lbs.
VICTORIAN RAILWAYS
ELECTRO MECHANICAL
INTERLOCKING MACHINE
GENERAL ARRANGEMENT
Engineer of Signals
E111
L.182/25

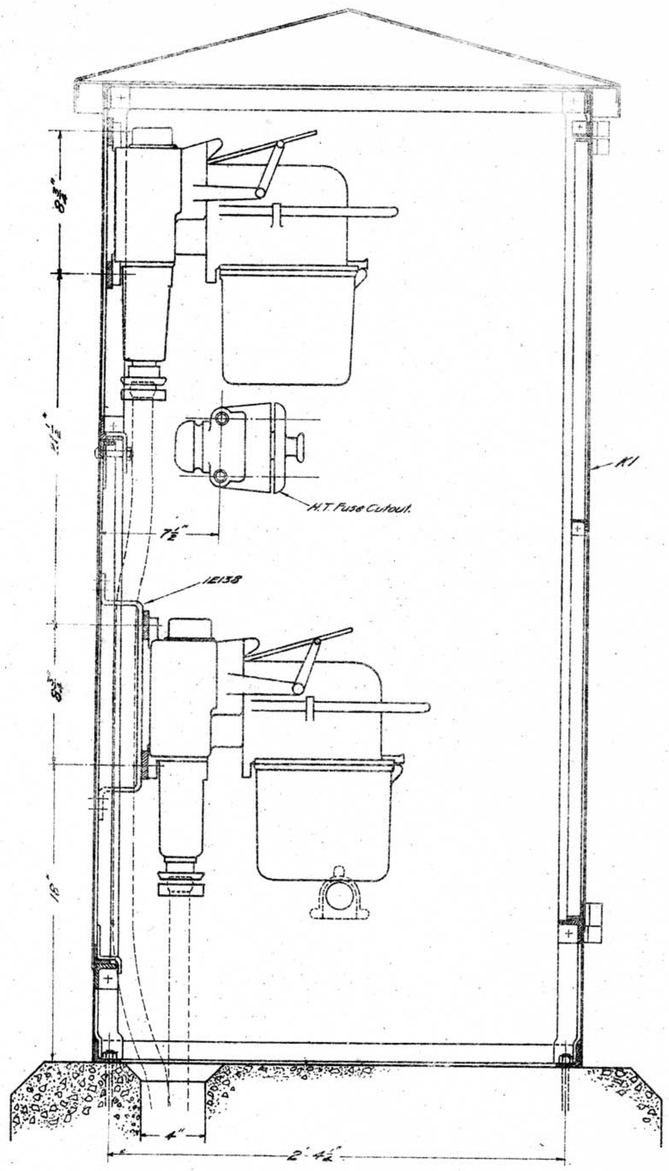

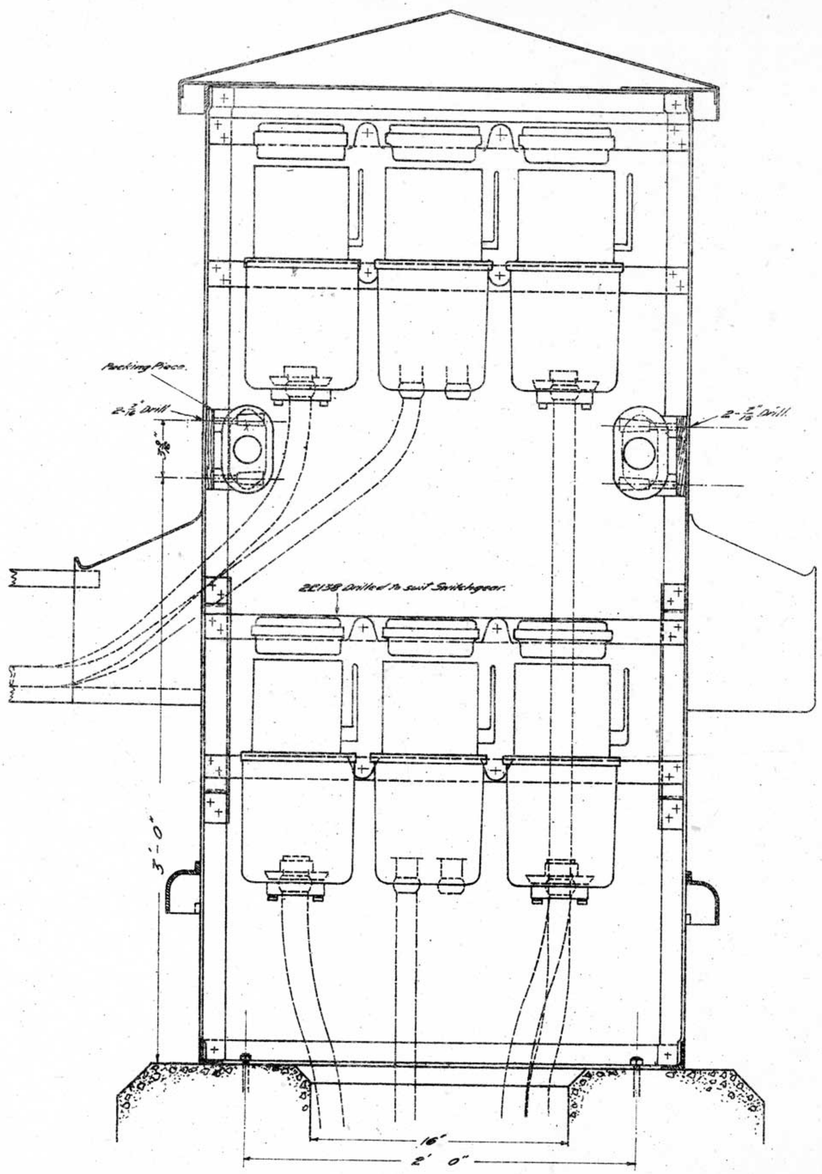

POWER DISTRIBUTION BOX

NO	NAME	MATERIAL	QUANTITY
K1	Power Distribution Box with Switchboard Supports omitted.	-	1
1E138	Oil Switchgear Supports.	M.S.	2
2E138	Supporting Box 1½" x ⅜" x 2" x 5⅜" long.	M.S.	2
Stock	3 Way Oil Switchgear.		2
	H.T. Fuse Cutouts { Similar to E138 Switchgear		2
	⅜" Bolt 5" long, complete with Nut & Washer.		4
	¼" " 2" " " " "		4
	⅛" Leather Washer ⅜" x ⅜" x 1¼" Dia.		4
	5" x 5/16" Packing Piece 5" long.	Wood	2

Stores
Section _____
Item No. _____

First used at diverging point of St Kilda & Port Melbourne Cables.

VICTORIAN RAILWAYS.
POWER DISTRIBUTION BOX.
WITH
2 SETS OF 3 WAY SWITCHGEAR.

24-6-18

Engineer of Signals.

Drawn by W.J.V.
Traced by W.J.V.

E138

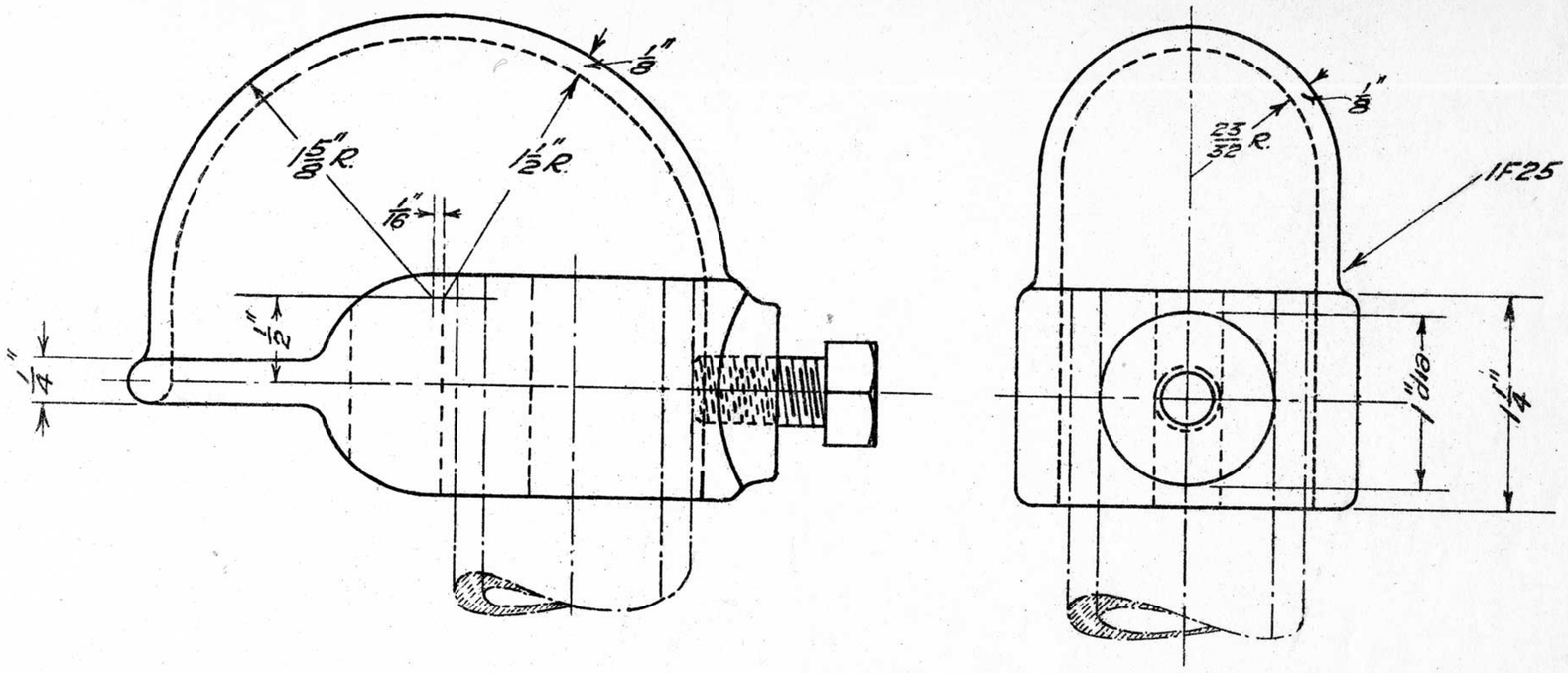

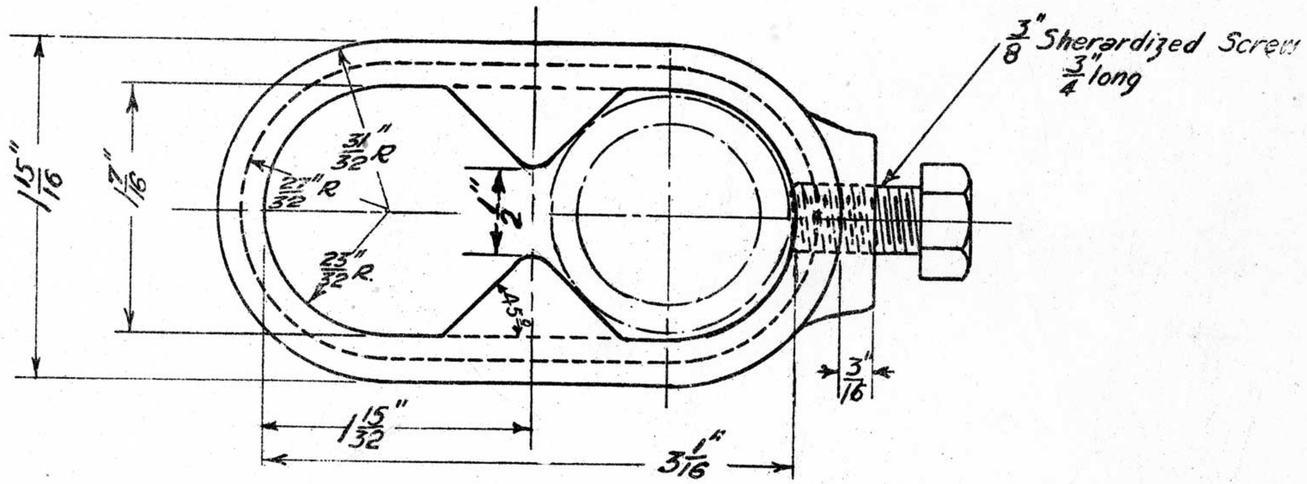

30-1-24. Alt. N°63
28-5-18.

C.I. (Galvanised)
WEATHERCAP.

	30-1-24 Alteration N°63 L.J.P.	Redrawn 28-5-18 Cored slots previously 1/4" wide. Original Drg. under same title dated 9-2-16	V.R. WEATHERCAP FOR 1" PIPE 28-5-18	Engineer of Signals	Drawn by A.H.S.	Traced by S.C.O.	F25

1317.16

Stores
Section _____
Item No _____

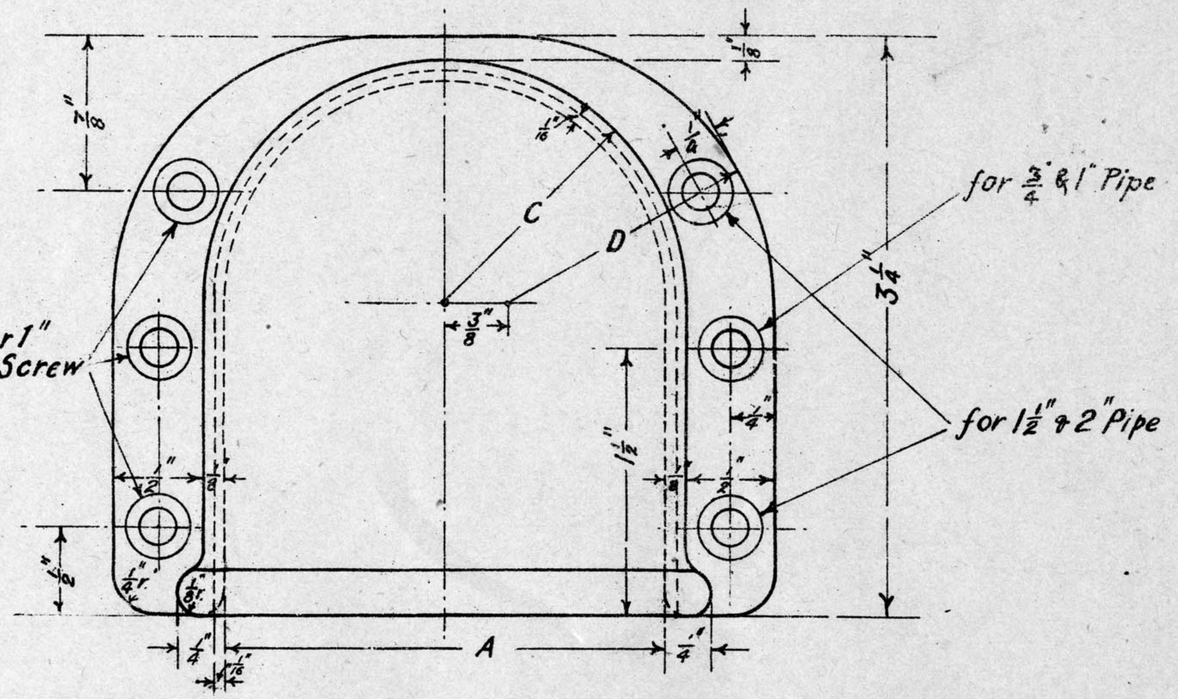

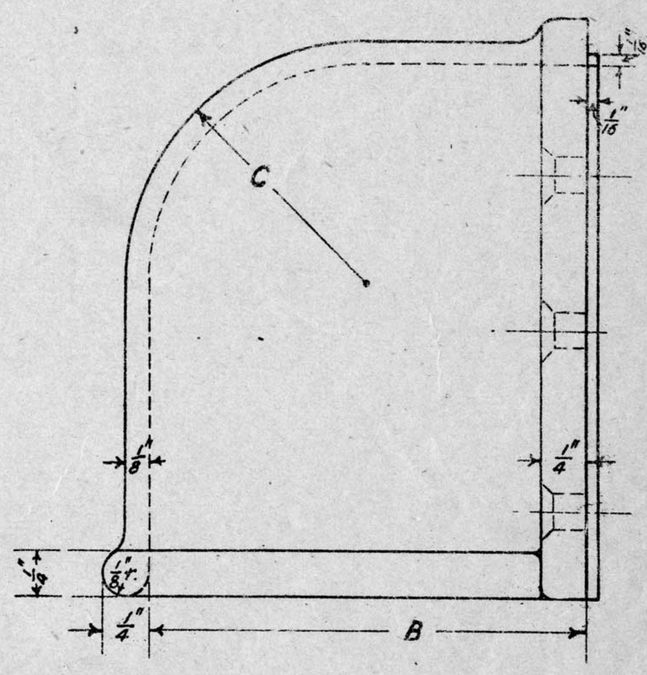

DIMENSIONS FOR ¾", 1", 1½", & 2" PIPE				
Dia. of Pipe	A	B	C	D
¾" & 1"	1½"	1½"	⅞"	1"
1½"	2"	2"	1⅛"	1¼"
2"	2½"	2½"	1⅜"	1½"

1 F
2 F
3 F

Material - ~~Cast Iron.~~
MCI 14/12/39

2 ¾" Pipe added. 13-9-19	Revision 1. 3·8·16	WEATHERCAP FOR TRUNKING 12:6 16	Engineer of Signals	Drawn by W.V.N	Traced by W.V.N.	F67
F.J.W.	4 Screw holes provided for 1½ & 2 Pipe			Checked by	
	W.V.N.				

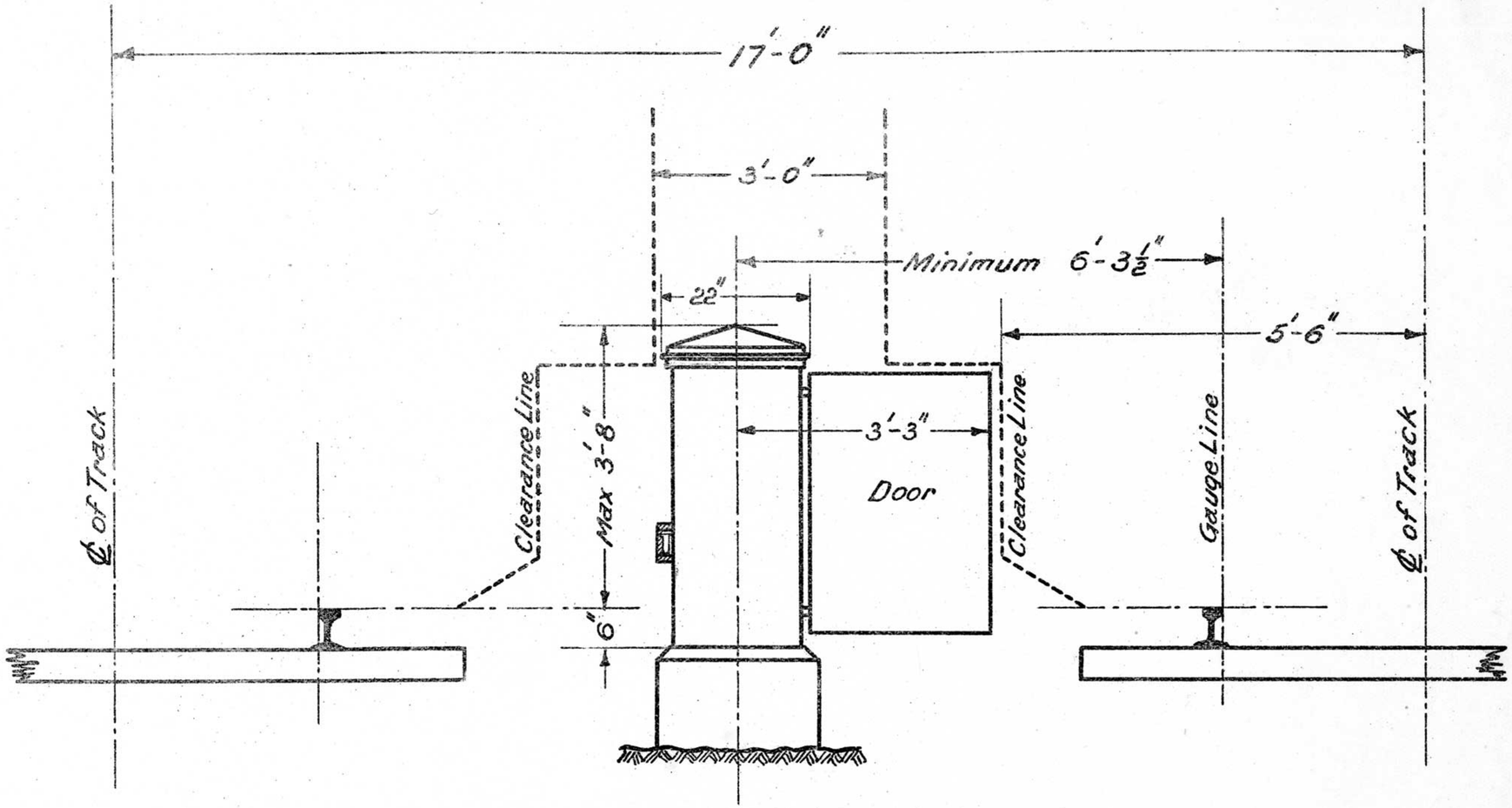

Track centre can be reduced to 15'-6" provided the top of Foundation is 13" below Rail level

Clearances shown are for Tangent Tracks, any other condition will require special consideration

	Redrawn & Revised Original D'wg same No dated 10-8-16.	V.R. CLEARANCE DIAGRAM FOR TRACK FEED BOX Scale ½" = 1 foot 31.7.23	Chief Eng'r of Sig & Teleg's	Drawn by C.E.W.	Traced by C.E.W.

F87

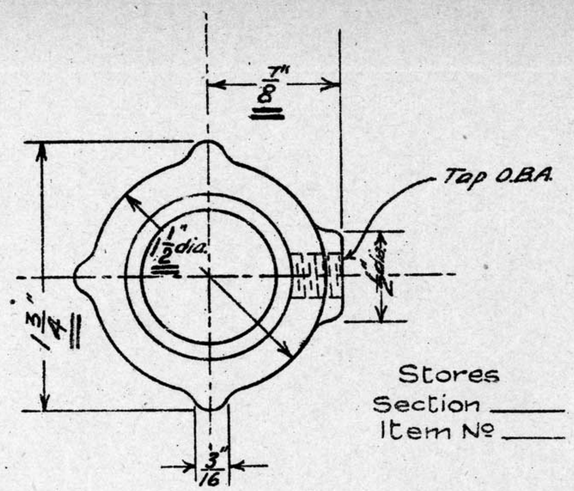

Stores Section ____ Item No ____

To be fitted with O.B.A. Round Headed Screw 3/4" long. 2F833

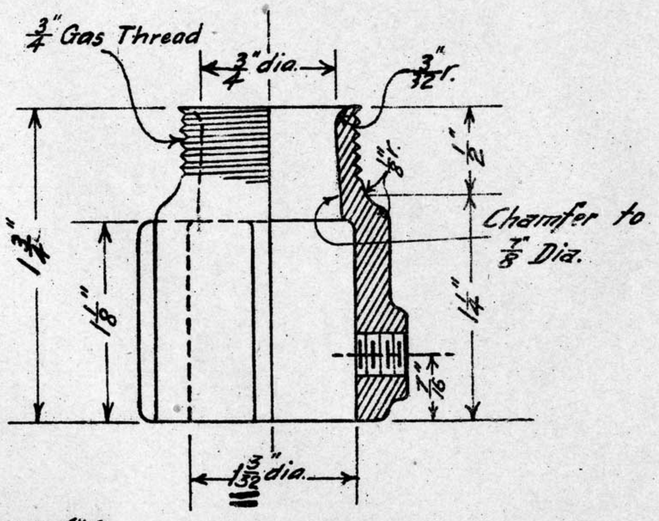

26-5-21 Alt 9
29.8.17

3/4" COUPLING

1F129

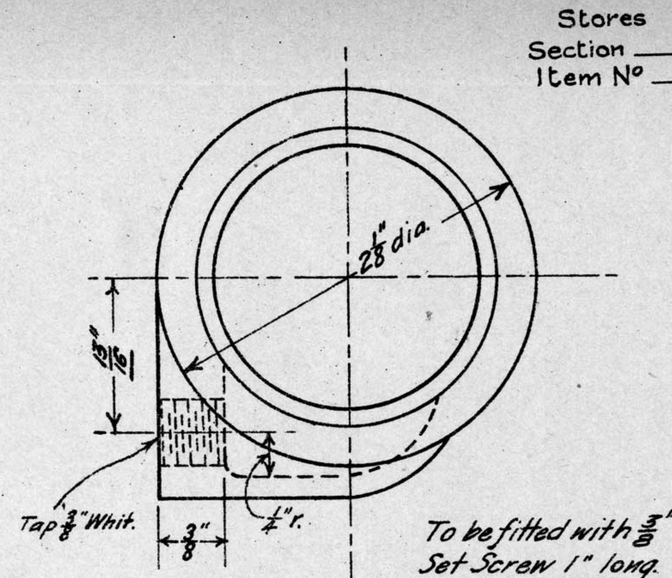

Stores Section ____ Item No ____

To be fitted with 3/8" Set Screw 1" long.

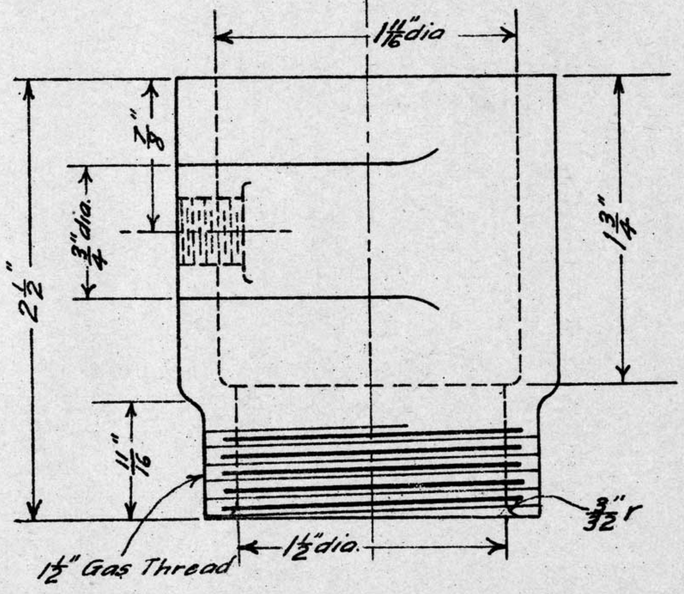

29.8.17

1 1/2" COUPLING

2F129

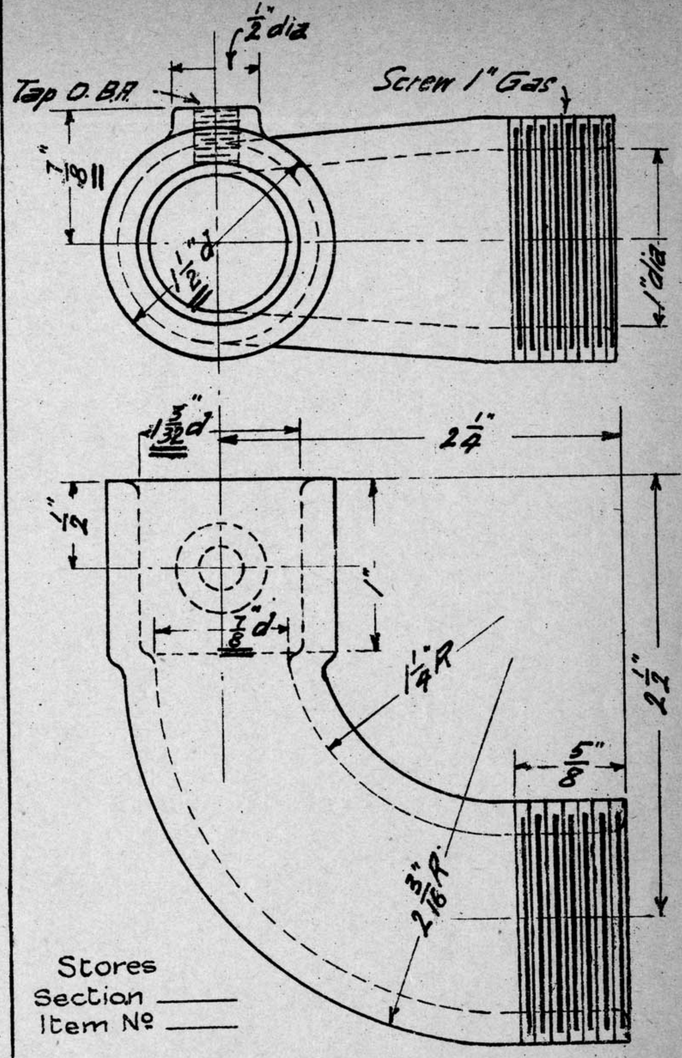

Stores Section ____ Item No ____

To be fitted with O.B.A. Round Headed Screw 5/8" long. 2F833

26-5-21 Alt 9
17-10-19

ELBOW COUPLING (1" Pipe & 3/4" Flex.)

3F129

	Alteration No 9	1 17-10-19 Part No 3F129 added. F.J.W. No.	Redrawn:- 29-8-17. Part 2F129 added. Original under same title dated 29.3.17.	29.8.17 V.R. COUPLINGS FOR FLEXIBLE CONDUIT	Engineer of Signals	Drawn by S.H.M.	Traced by S.H.M.	F129

1F130

INSULATION FOR 3 TIE PLATES — SINGLE PAIR

Part No	NAME	Quantity
5B35	Insulating Washer	6
6 "	" Bush	6
7 "	" Plate	3
18 "	" Washer Special	3

Material:- Grey Fibre

2F130

INSULATION FOR 3 TIE PLATES — SINGLE COMPOUND

Part No	NAME	Quantity
5B35	Insulating Washer	6
6 "	" Bush	6
7 "	" Plate	3
18 "	" Washer Special	3
11B70	" Base Plate	3
12 "	" Bush	6
13 "	" Washer	6

Material:- Grey Fibre

3F130

INSULATION FOR 1 TIE PLATE — SINGLE PAIR

	Part No	NAME	Quantity
2F3185	~~5B35~~	Insulating Washer	2.
2F3184	~~6~~	" Bush.	2.
	7 "	" Plate.	1.
	18 "	" Washer Special.	1.

Material:- Grey Fibre

4F130

INSULATION FOR 1 TIE PLATE — SINGLE COMPOUND

	Part No	Name	Quantity
2F3185	5B35	Insulating Washer	2
2F3184	6 "	" Bush	2
	7 "	" Plate	1
	18 "	" Washer Special	1
	11B70	" Base Plate	1
7F3184	~~12 "~~	" Bush	2
6F3185	~~13 "~~	" Washer	2

Material:- Grey Fibre

Redrawn See Blueprint Dated 22-8-27

2 15-11-27 List No 4 F130 added C.W.F.	1. 5-5-20 List No 3 F130 added F.W.H. W.H.D.	REFERENCE:- To be supplied as ordered on Material Lists	V.R. TIE PLATE INSULATION 28-3-17	Engineer of Signals	Drawn by J.H.M. Checked by	Traced by S.C.O	F130

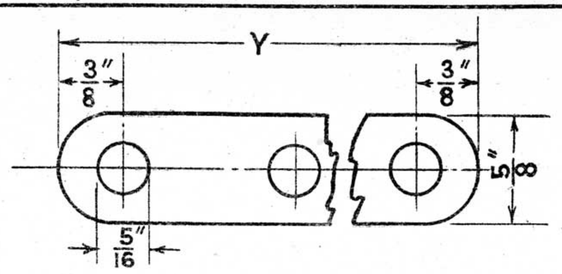

Punched holes

BRASS—18 S.W.G.

Spacing of Holes to be $1\frac{1}{32}$".
Nº of holes to be equal to the Nº of Ways ordered.
Length "Y" = $(1\frac{1}{32}" \times$ Nº of Ways) less $\frac{9}{32}"$
When ordering, Nº of Ways required to be stated.
e.g. :— 1F134 — 6 Way.

Stores
Section ____
Item Nº ____

23:5:17 **TERMINAL CONNECTING STRIP** **1F134**

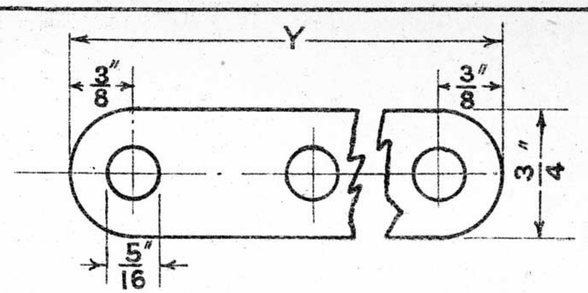

Punched holes

BRASS—14 S.W.G.

Spacing of Holes to be $1\frac{1}{32}$".
Nº of holes to be equal to the Nº of Ways ordered.
Length "Y" = $(1\frac{1}{32}" \times$ Nº of Ways) less $\frac{9}{32}"$
When ordering, Nº of Ways required to be stated.
e.g. :— **2F134 — 5 Way.**

Stores
Section ____
Item Nº ____

23:5:17 **FUSE CONNECTING STRIP** **2F134.**

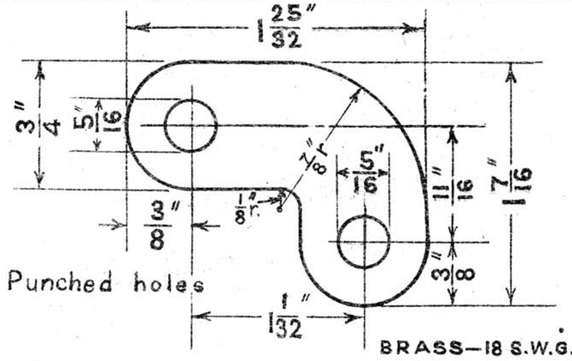

Punched holes

BRASS—18 S.W.G.

Stores
Section ____
Item Nº ____

23:5:17. **FUSE & TERMINAL LINK** **3F134**

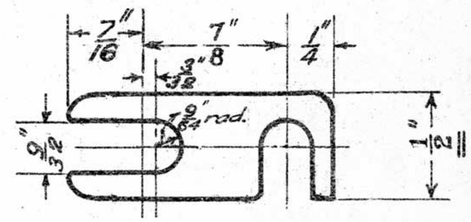

BRASS—20 S.W.G.

Stores
Section ____
Item Nº ____

18 : 2 : 25 Alt. 95
19 : 11 : 24 Alt. 90
29 : 5 : 24 Alt. 73
31 : 10 : 17.

TERMINAL CONNECTING LINK (for Circuit Controllers) **4F134**

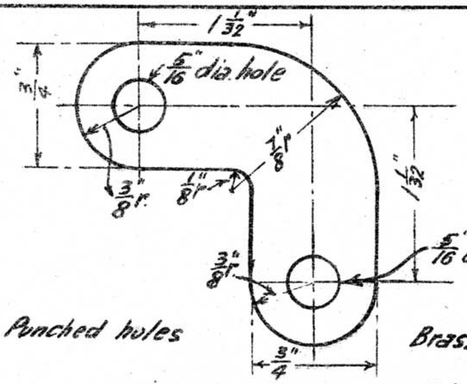

Punched holes

Brass - 18 S.W.G.

Stores
Section ____
Item Nº ____

17-12-17 **Fuse & Terminal Link** (When terminals & Fuse Blocks are on same ℄) **5F134**

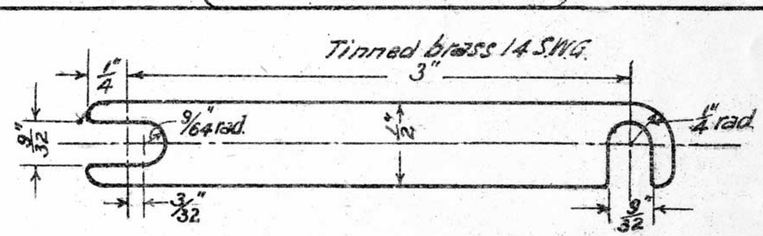

Stores
Section
Item Nº

4-8-19
21-5-19

Transformer Link **6F134**

4	21-5-19	5	4-8-19
Part Nº 6F134 added.	F.J.W.	Part 6F134 Previously 3/4" Wide.	A.H.S.

3	6-7-18	2	17-12-17	1	31:10:17.	V. R.	Engineer of Signals	Drawn by G.R.Y.	Traced by G.R.Y.	**F134**
Part Nº 4F134 ends previously rounded and 5/16" dia holes.	S.C.O.	Part Nº 5F134 added	A.H.S. F.J.W.	Part Nº 4F134 added.	A.H.S. G.R.Y.	STANDARD CONNECTING STRIP 28:5:17.		Checked by [redacted]	

L61/25

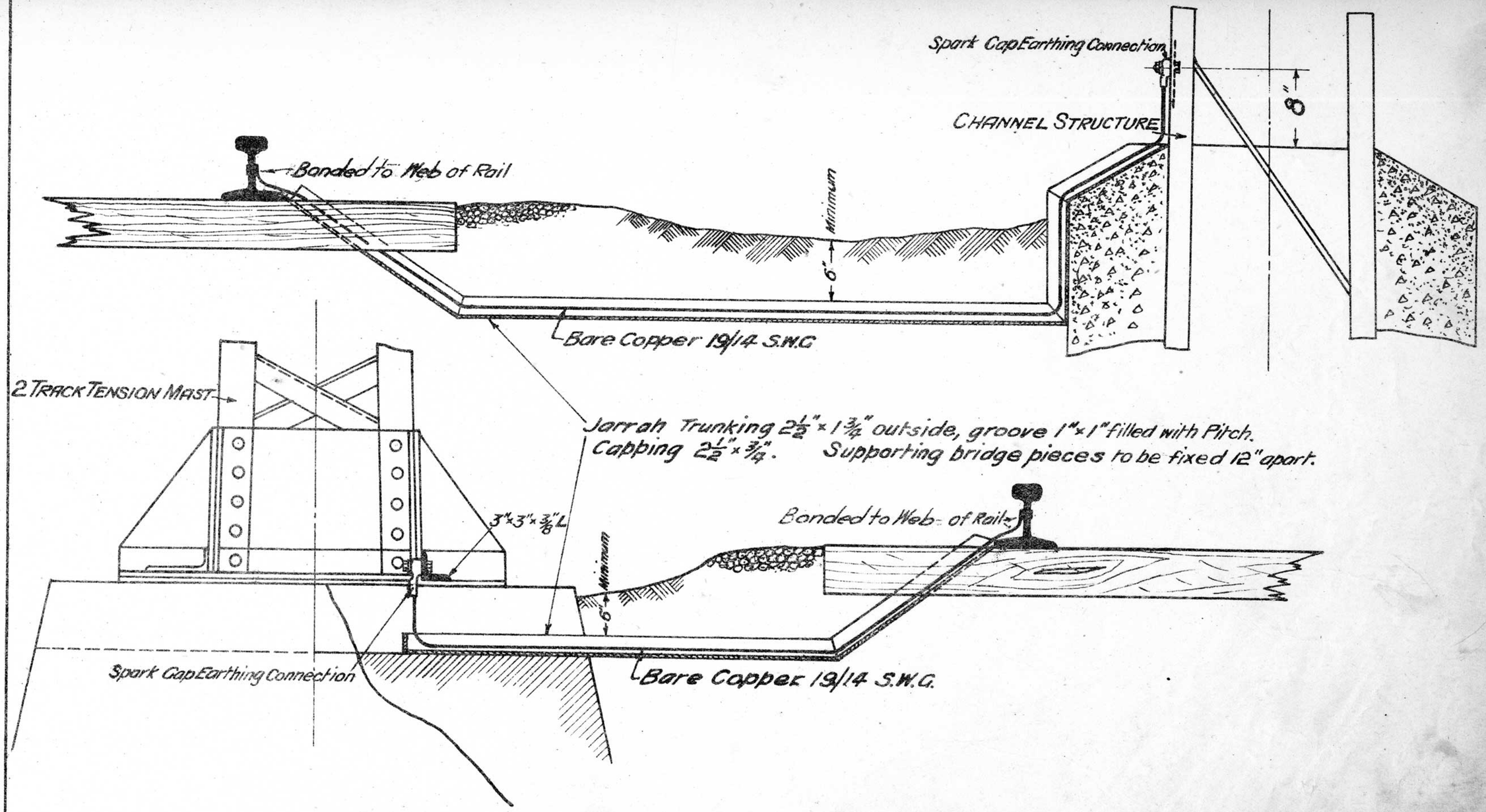

	REFERENCE. M. 3893 'A'	V.R. SPARK GAP EARTHING CONNECTION TYPICAL ARRANGEMENTS Scale :- 1 Inch = 1 Foot 1-12-17	Engineer of Signals	Drawn by V.G.C.	Traced by V.G.C.	F172

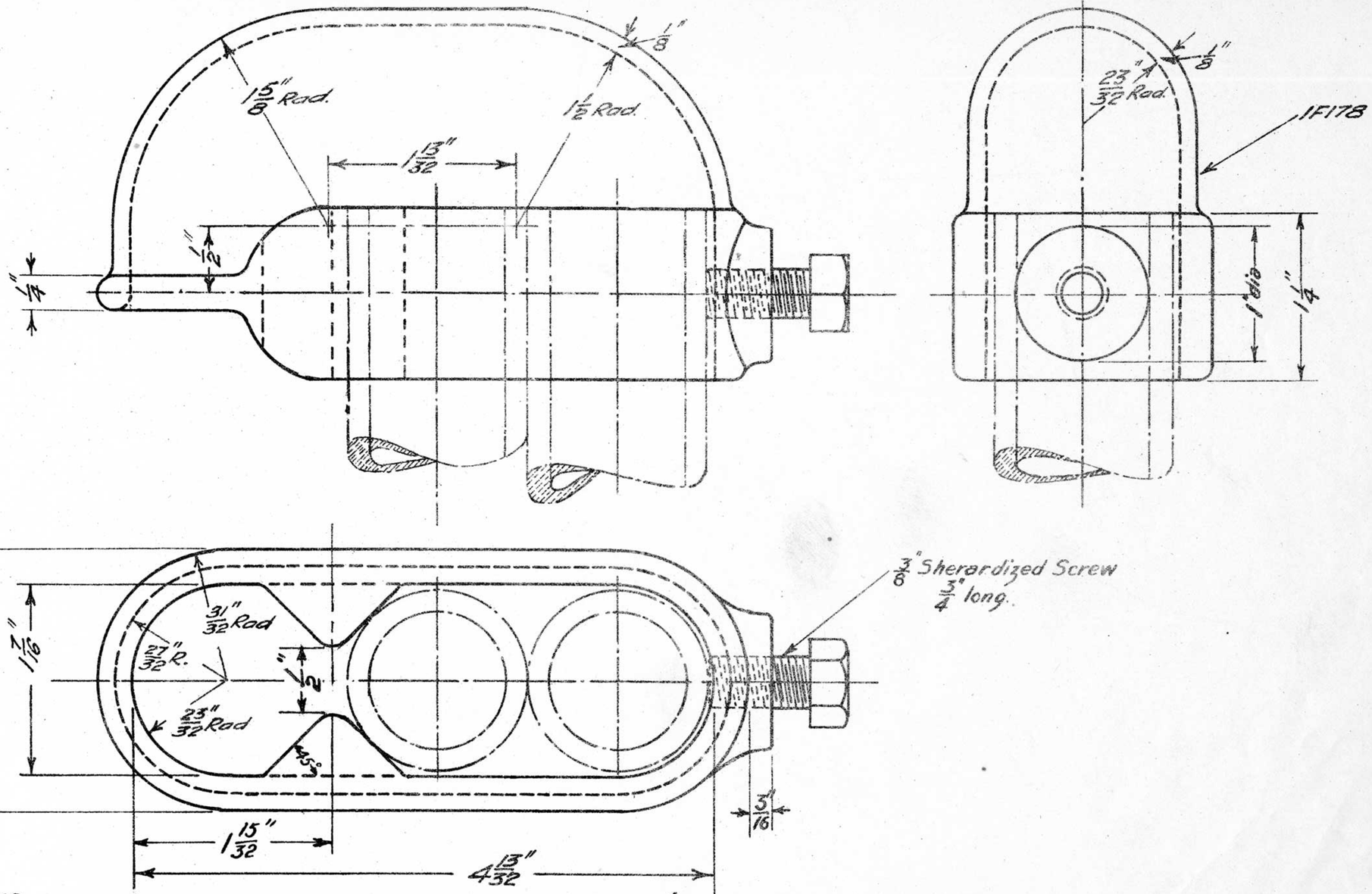

30-1-24 Alt. N°63.
1-2-18.

C.I. (Galvanised)
WEATHERCAP.

	30-1-24. Alteration N°63 L.J.A.	V.R. WEATHERCAP FOR 2-1" PIPES 1-2-18	Engineer of Signals	Drawn by S.C.O.	Traced by S.C.O.	F178

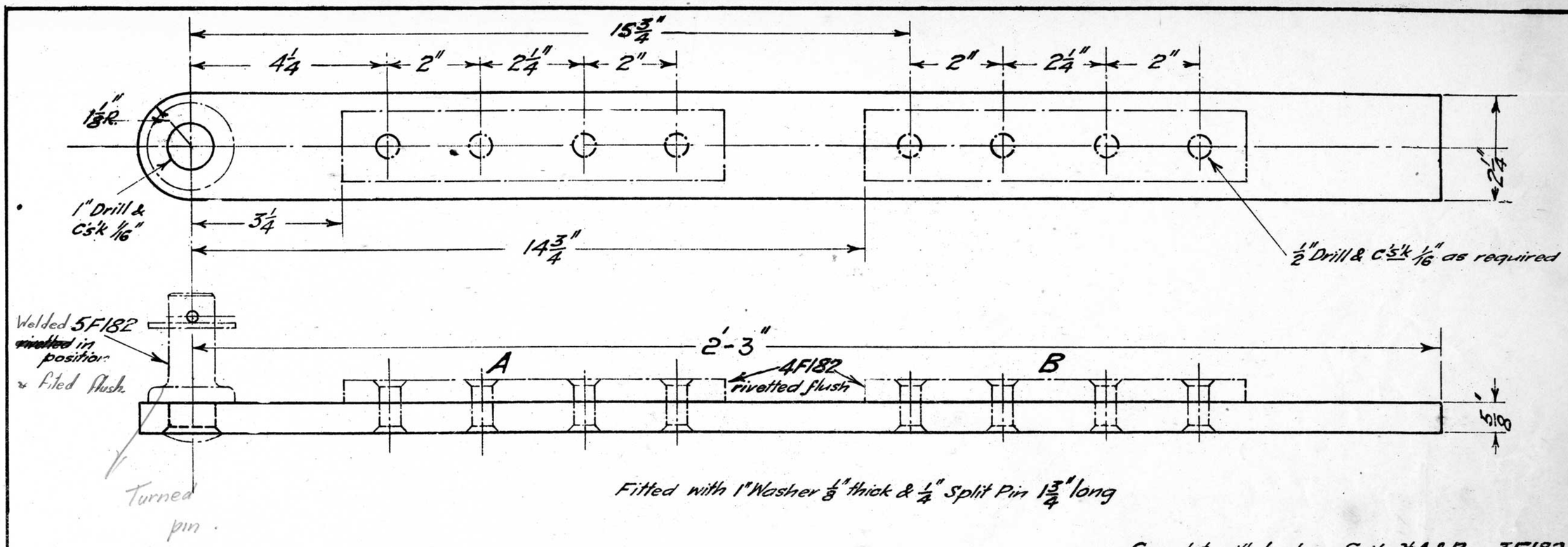

Fitted with 1" Washer 1/8" thick & 1/4" Split Pin 1 3/4" long

Complete with Locking Snib at A & B 3F182
" " " " " B only 2F182
" " " " " A " 1F182

12-6-18 PLUNGER

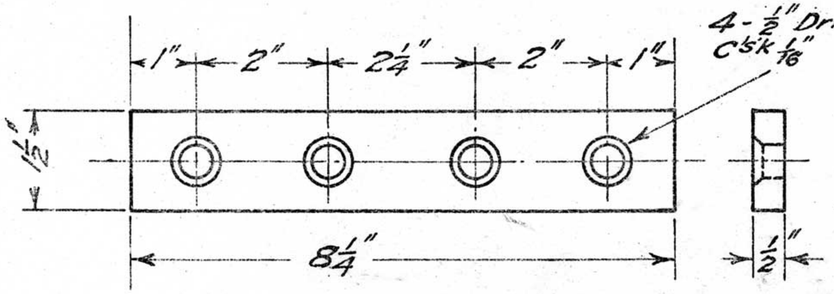

To be Case hardened

12-6-18 LOCKING SNIB 4F182

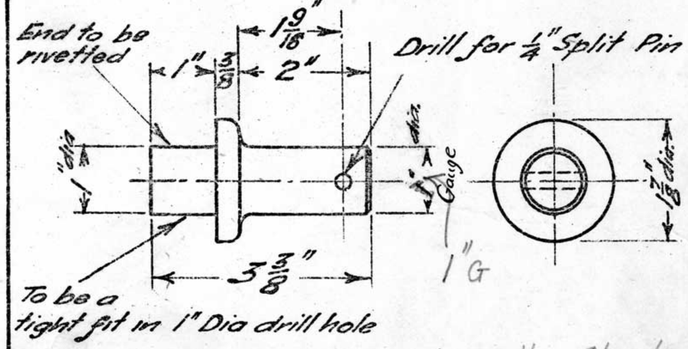

Bright. all steel Turned.

12-6-18 PIN 5F182

Stores
Section
Item No

See Blueprint for Part 6F182

Part No 6F182 Added.	V.R. PLUNGER Central Snibs 12-6-18	Engineer of Signals	Drawn by S.C.O.	Traced by S.C.O.	F182.

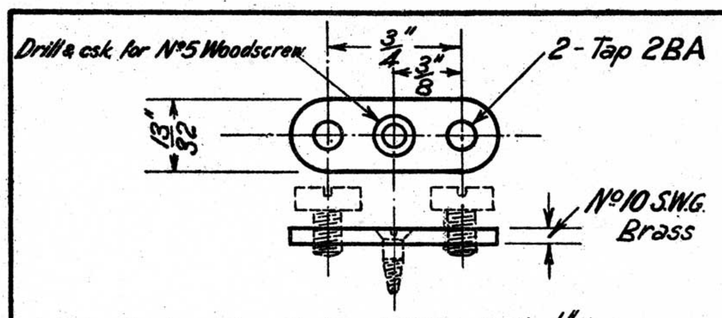

Supplied with :- 2 off - 4F833 - 2BA - 1/4" long
1 " - No 5 Woodscrew 3/8" "

30-7-23 **1F202**

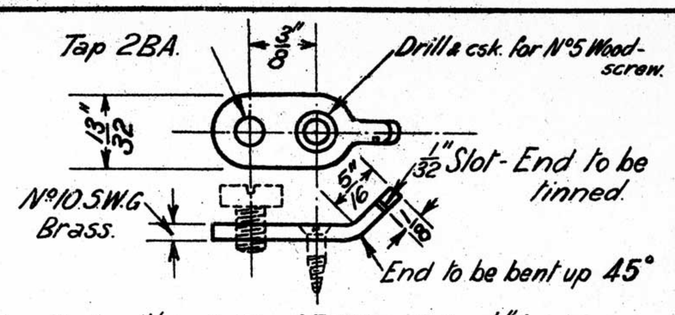

Supplied with :- 1 off - 4F833 - 2BA. 1/4" long
1 " - No 5 Woodscrew 3/8" "

30-7-23 To be Electro-tinned **4F202**

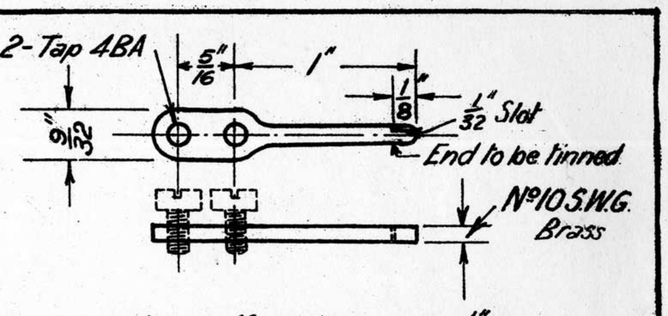

Supplied with :- 2 off - 4F833, 4BA, 1/4" long.

30-7-23 To be Electro-tinned **7F202**

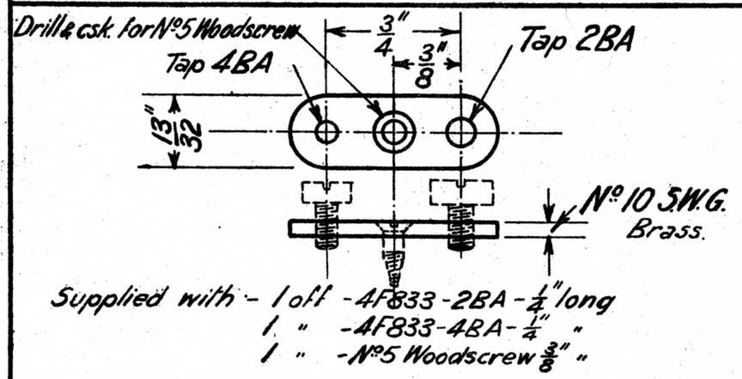

Supplied with :- 1 off - 4F833 - 2BA - 1/4" long
1 " - 4F833 - 4BA - 1/4" "
1 " - No 5 Woodscrew 3/8" "

30-7-23 **2F202**

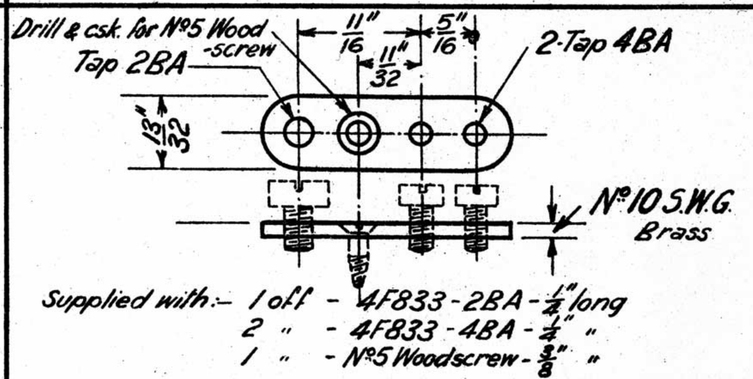

Supplied with :- 1 off - 4F833 - 2BA - 1/4" long
2 " - 4F833 - 4BA - 1/4" "
1 " - No 5 Woodscrew - 3/8" "

30-7-23 **5F202**

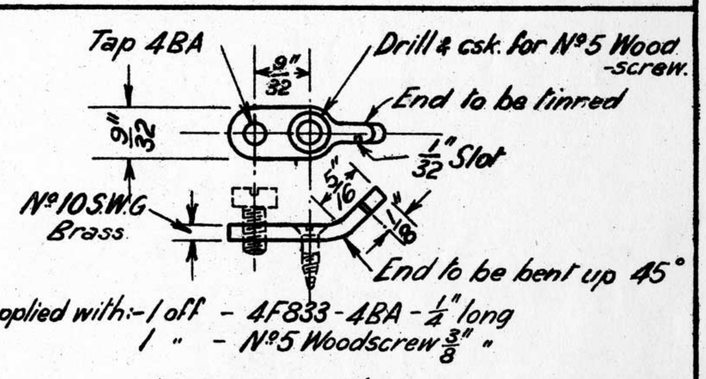

Supplied with :- 1 off - 4F833 - 4BA - 1/4" long
1 " - No 5 Woodscrew 3/8" "

To be Electro-tinned

30-7-23 **8F202**

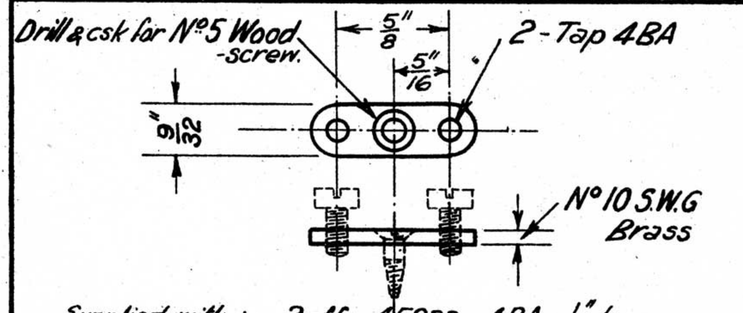

Supplied with :- 2 off - 4F833 - 4BA - 1/4" long.
1 " - No 5 Woodscrew 3/8" "

30-7-23 **3F202**

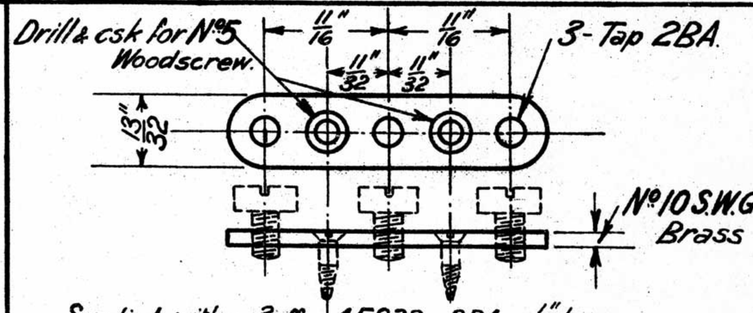

Supplied with :- 3 off - 4F833 - 2BA - 1/4" long
2 off - No 5 Woodscrew - 3/8" "

30-7-23 **6F202**

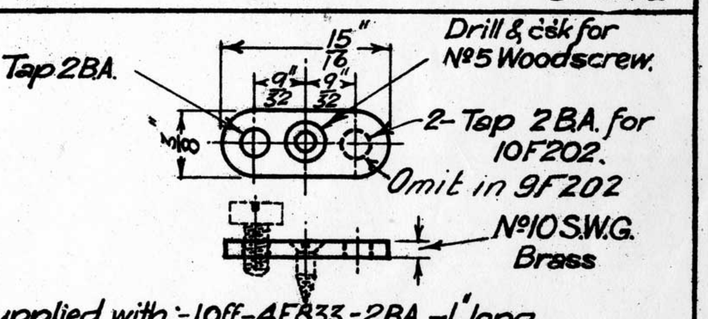

Supplied with :- 10 off - 4F833 - 2BA. - 1/4" long
1 " - No 5 Woodscrew - 3/8" long

28-3-25 **10F202 9F202**

1 28-3-25 Parts 9 & 10F202 added. L.J.P. F.J.H

30-7-23 Redrawn, revised & added to. Original under same title dated 3-3-19

V.R. TERMINALS
Standard Types 30-7-23

Chief Engr of Stgs & Tels.

Drawn by R.G.C.

Traced by R.G.C

F202

CIRCUIT CONTROLLER (COMPLETE) FOR MECHANICAL SIGNAL

Ordering Nos
1F257 as Circuit Controller 3 Contacts
2F257 " " " 1 " & Pole-Changer
3F257 Repeater (Pole-Changer)

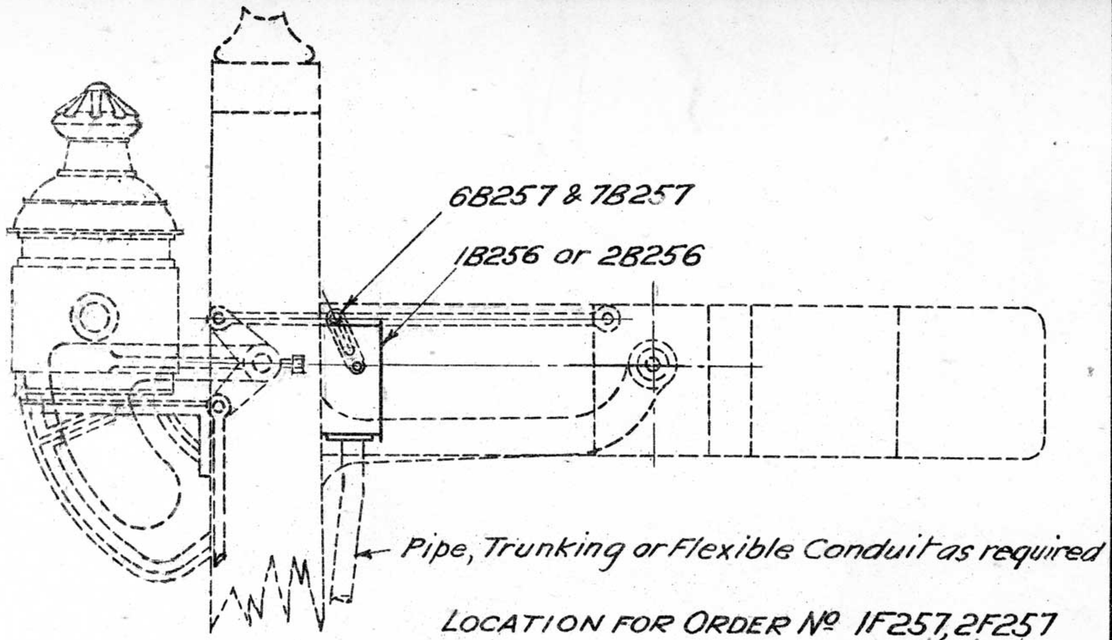

LOCATION FOR ORDER Nº 1F257, 2F257

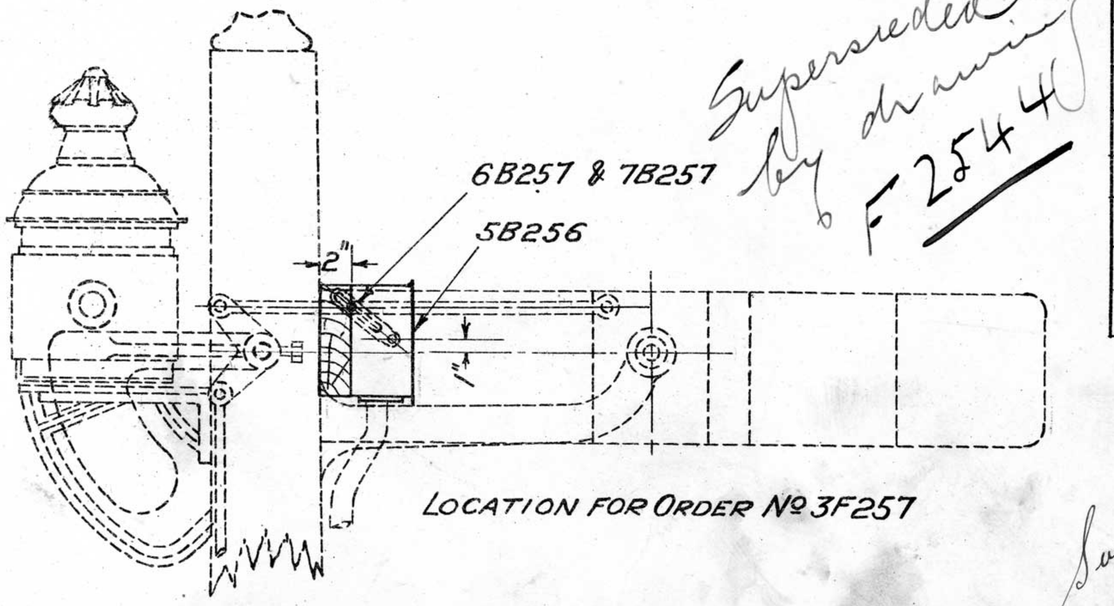

LOCATION FOR ORDER Nº 3F257

Superseded by drawing F2544

LIST OF PARTS			QUANTITY					
Nº	Name	Material	1F257	2F257	3F257			
1B256	Circuit Controller		1					
2B256	" " & Pole Changer			1				
5B256	Repeater (Pole Changer)				1			
6B257	Connecting Rod	M.S.	1	1	1			
7B257	Clamp	"	1	1	1			
Stock	Bolts 1" × 5/16	M.S	2	2	2			
"	Wood Screws Nº15 × 1½"	"	2	2	2			
"	Packing Piece (Between Case & Mast	Wood			1			

Superseded by Drawing F2544

NOTE:
When 1" Gas Thread is required order inlet plate Nº 10B257
" 1½" " " " " " " " Nº 11B257
" ¾" " " " " " " " Nº 12B257

3010·22

Order Nº 12B257 for ¾" pipe added 10·3·23	Redrawn Part Nº 3F257 added. Supersedes Drwg under same Title dated 26·3·19 6·11·22	V.R. CIRCUIT CONTROLLER FOR MECHANICAL SIGNAL ASSEMBLY 6·11·22	Chief Engr of Sigs & Telgh:	Drawn by V.G.C	Traced by V.G.C	F257

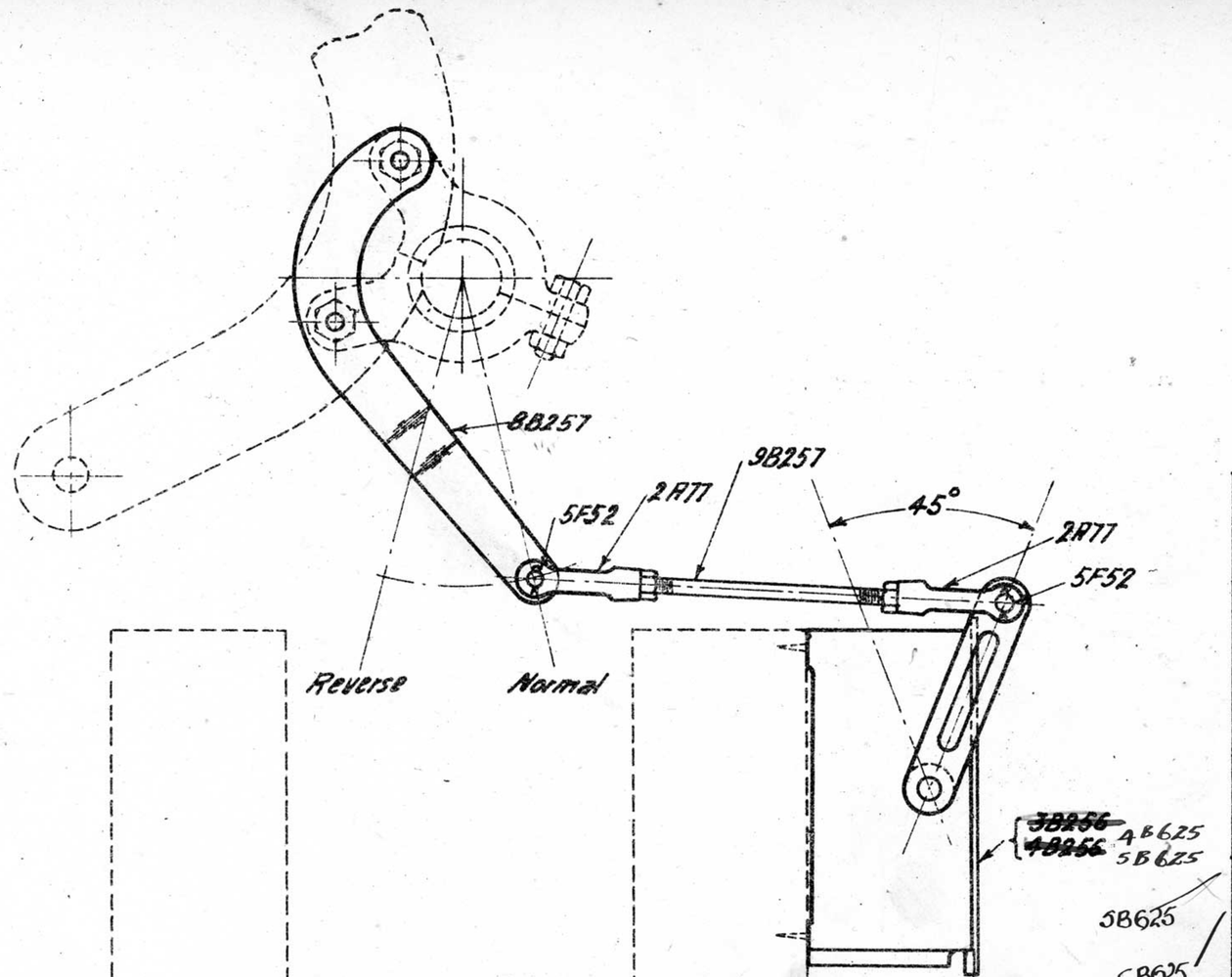

Scale 3" = 1 foot

Stores
Section _____
Item Nº _____

CIRCUIT CONTROLLER (COMPLETE) FOR INTERLOCKING LEVER

Ordering Nos

1F258 As Circuit Controller 3 contacts
2F258 " " " 1 " & Pole Changer

List of Parts

Nº	Name	Material	Quantity 1F258	Quantity 2F258
~~3B256~~	Circuit Controller		1	
~~4B256~~	" " & Pole Changer			1
8B257	Operating Arm.	MS	1	1
9B257	Adjusting Rod.	"	1	1
2A77	Jaw.	"	2	2
5F52	Pin 1 1/16" long.	"	2	2
Stock	Cotters 1/16" x 5/8"		2	2
"	Woodscrews Nº15 x 1 1/2"		2	2

26.11.26
Alteration Nº 162

V.R. CIRCUIT CONTROLLER FOR INTERLOCKING LEVER ASSEMBLY 1-4-19

Engineer of Signals

Drawn by F.J.W.

Traced by F.J.W.

F258

L47/25

RELATIVE MOVEMENT OF LEVER AND MOTION SEGMENTS (D2)

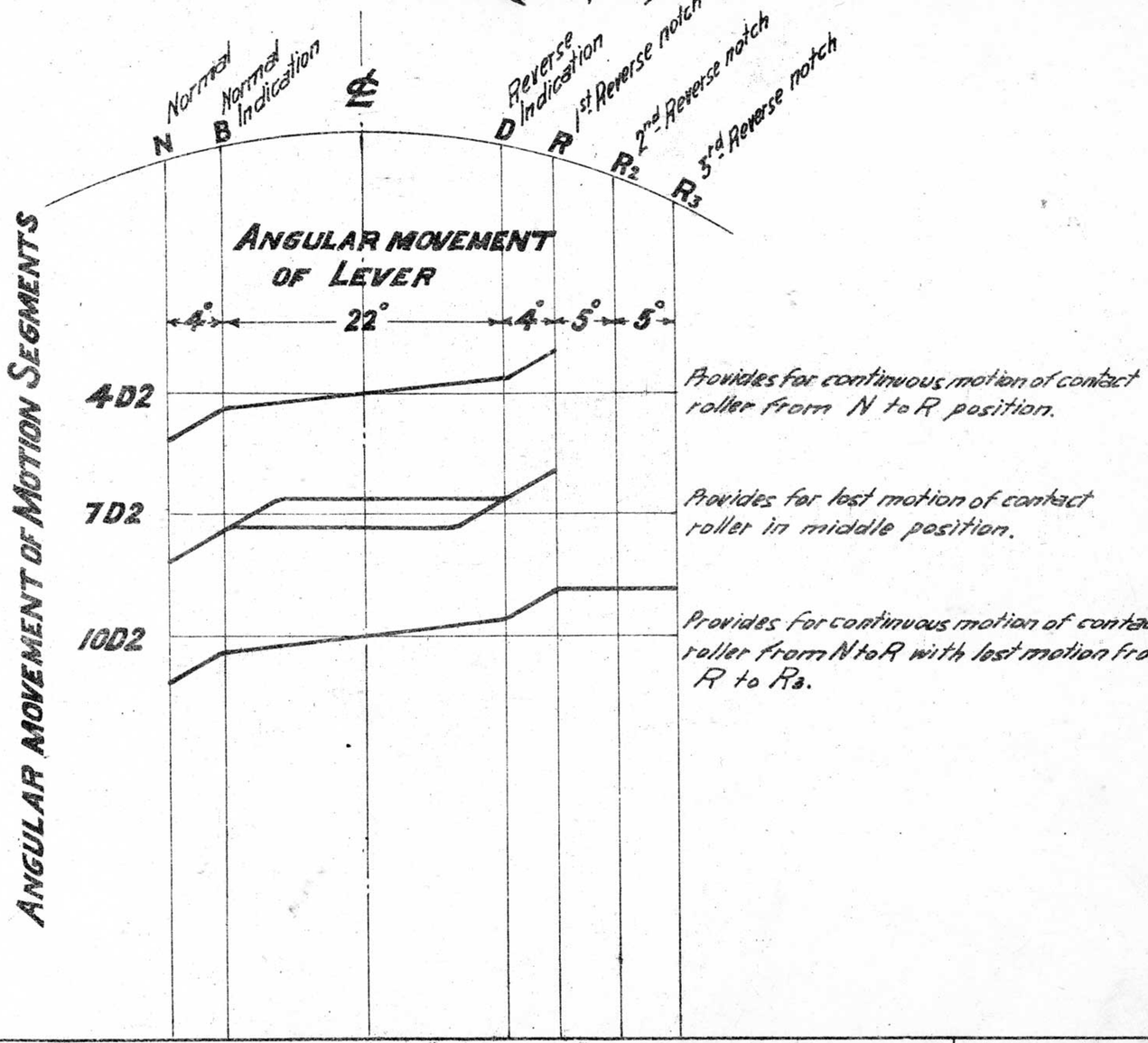

CIRCUIT CONTROLLER D2

Note :- Motion segment 4D2 will be supplied unless otherwise ordered. State 7D2 or 10D2 when required.
Operating Arm to be ordered separately as required.

Order No.	Combination
17D2	Circuit Controller for 6 contacts
18D2	" " " 12 "
19D2	" " " 18 "

OPERATING ARMS (FOR D2)

Order No.	Type of Interlocking Apparatus	For Lever Travel
1F116	No. 6A Pattern	N to R
1F117	A Pattern	N to R
1F189	No. 6A or A Pattern	N to R3

CIRCUIT CONTROLLER B256
Complete with Operating Arm etc.

Order No.	Combination
1F258	Circuit Controller 3 contacts
2F258	" " 1 " & Pole-changer

CIRCUIT CONTROLLER (IN LEVER-LOCK CASE)
Lock & Lock magnet omitted

Order No.	Combination
34M1	Circuit Controller 6 Contacts

LEVER CIRCUIT CONTROLLERS
ORDERING LISTS
15-3-19.

Engineer of Signals

Drawn by F.J.W.

Traced by F.J.W.

F262

L:47/25

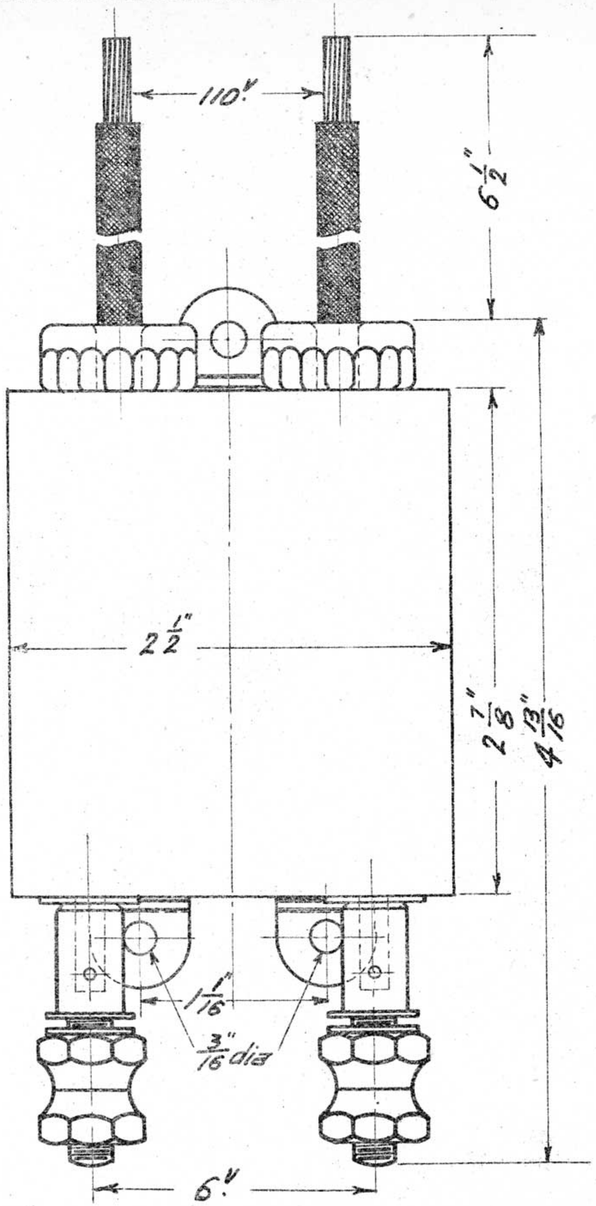

Stores
Section ____
Item No ____

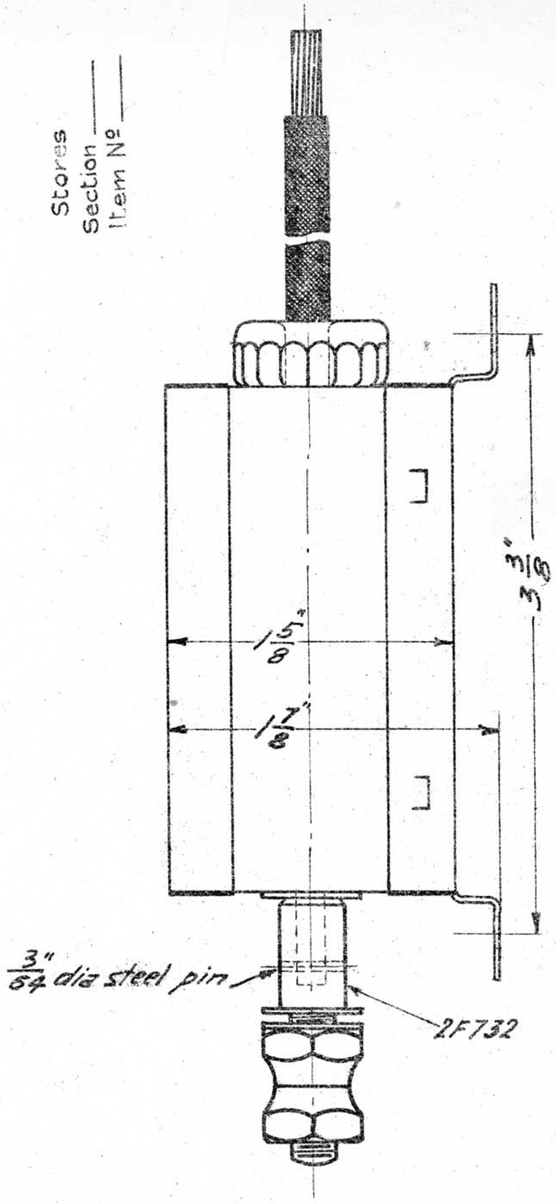

Stores
Section ____
Item No ____

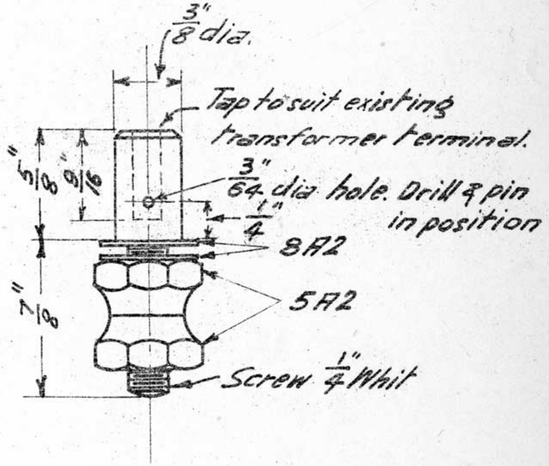

Indication Transformer (Complete) 1F732 17-9-19

Brass Terminal 2F732

V.R. INDICATION TRANSFORMER (THORDARSON 2-6 WATT)
110V. – 6V.
Scale Full Size 17-9-19

Engr. of Signals	Drawn by	Traced by	
	F.J.W.	F.J.W.	F732

L.63/25

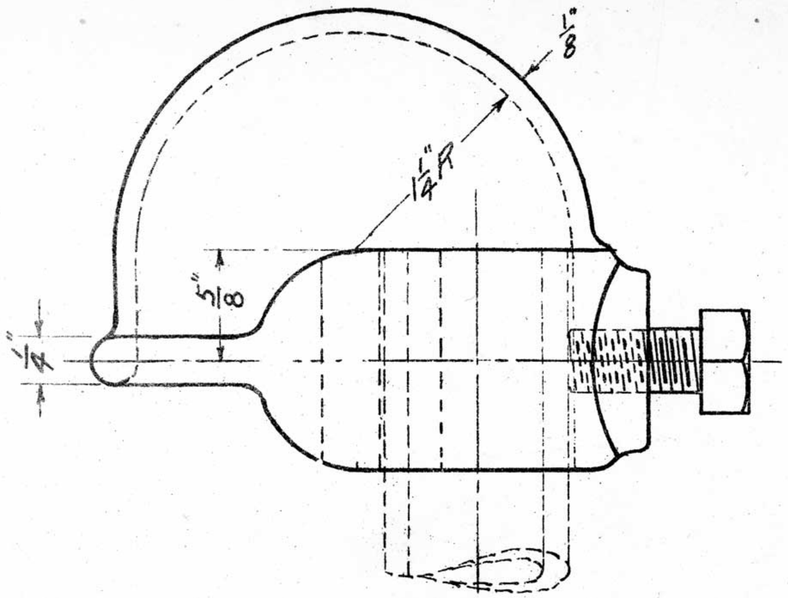

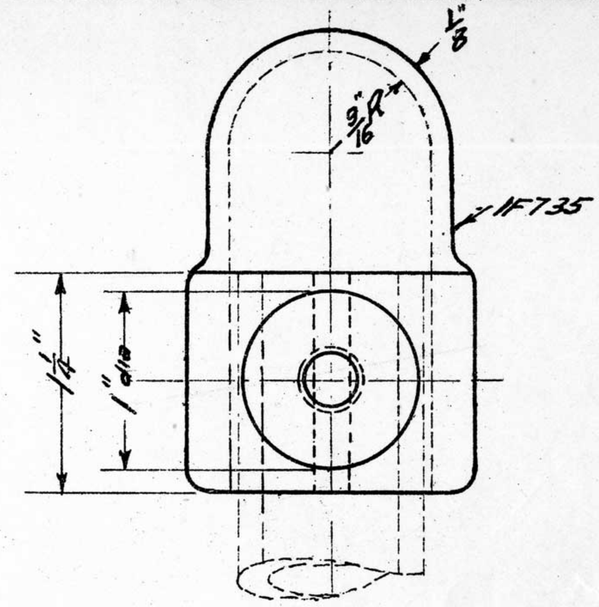

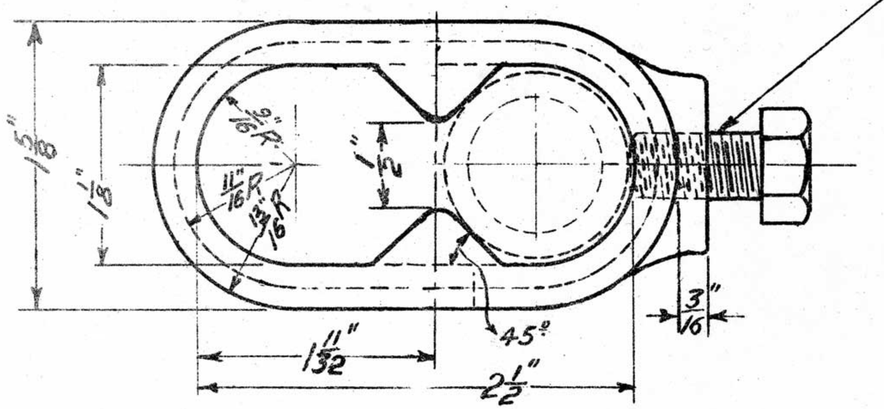

30-1-24. Alt. No 63.
22-9-19.

C.I. (Galvanised)
WEATHERCAP.

	30-1-24 Alteration No 63 L.J.P.	V.R. WEATHERCAP FOR 3/4" PIPE 22-9-19	Engr. of Signals	Drawn by F.J.W.	Traced by F.J.W.	F735

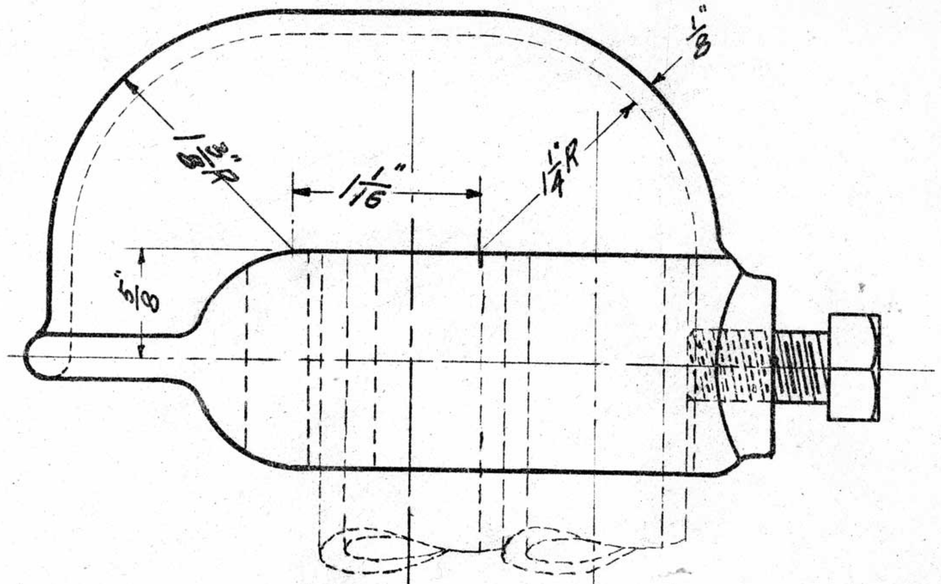

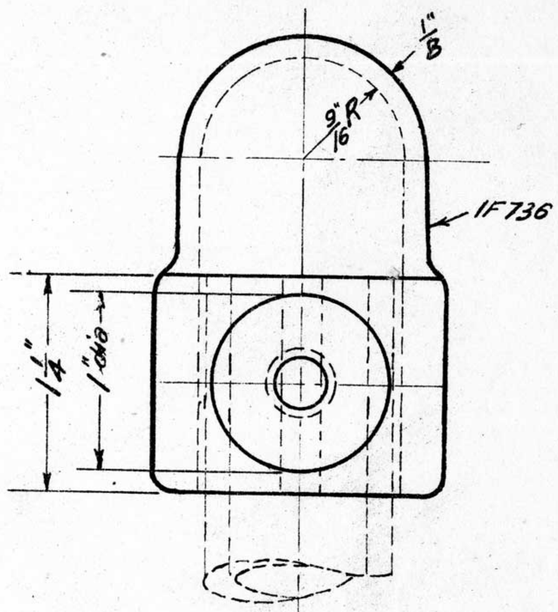

30-1-24 Alt. N° 63.
23-9-19.

C.I. (Galvanised)
WEATHERCAP.

	30-1-24. Alteration N°63. LJP	V.R. WEATHERCAP FOR 2-3/4" PIPES 23-9-19	Engr. of Signals	Drawn by F.J.W.	Traced by F.J.W.	F736

2698-19

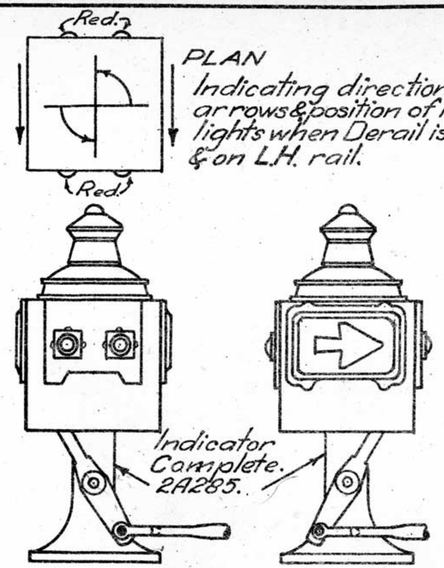

Target for Derail or Derail Switch.

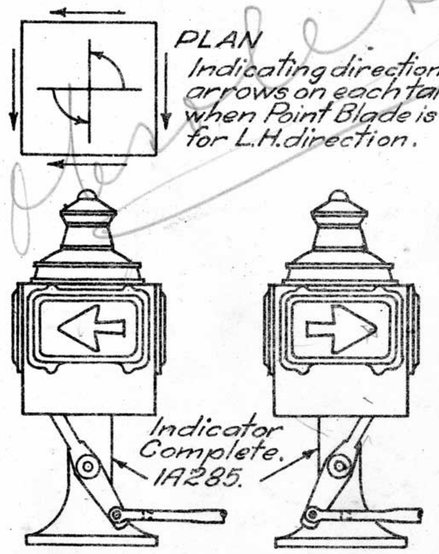

Target for Turnout.

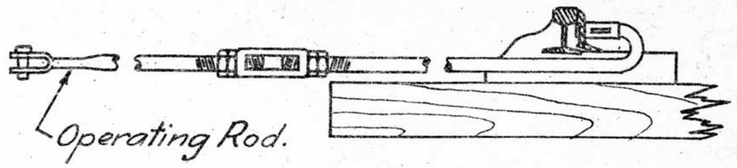

NEAR BLADE

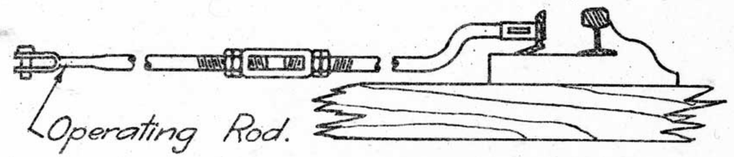

FAR BLADE

Operating Rods.

	Near Blade	Far Blade
Non-insulated (as shewn) see	3A361	4A361
Insulated (insul. joint in Vert. Plane) "	8A361	10A361
" (" " " Horiz ") "	9A361	11A361

Redrawn

Class "X" Layouts

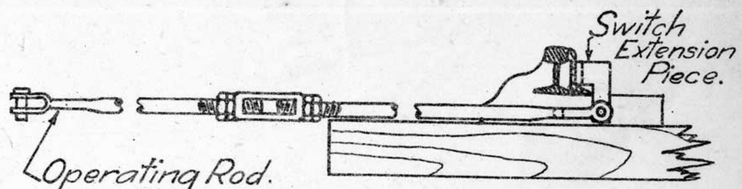

NEAR BLADE



FAR BLADE

Operating Rod see 1A376

Dated 14-1-19

Switch Extension Pieces Y = 4½" See Drg. F1301

Blueprint

Class "Y" Layouts

Redrawn. 23-5-24 Original under title "Pt. Indr. Arrow Type. Typical Application." dated. 10-11-20	V.R. POINT INDICATOR Application & Operation of 23-5-24	Chief Eng. of Sigs. & Tels.	Drawn by K.C.H.C.	Traced by K.C.H.C.	F828

L.63125

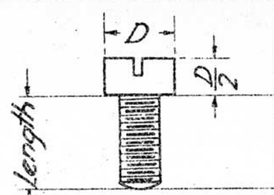

Depth of Slot $\frac{D}{4}$

CHEESE HEAD

1F833

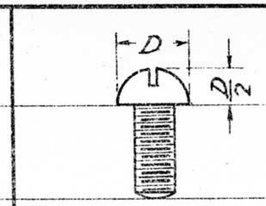

Depth of Slot $\frac{D}{4}$

ROUND HEAD

2F833

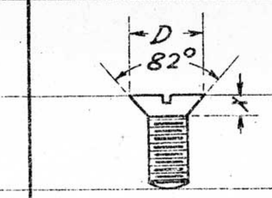

Depth of Slot $\frac{X}{3}$

CSK. HEAD

3F833

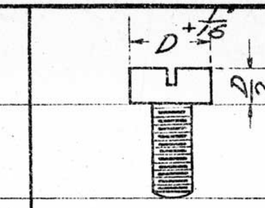

Depth of Slot $\frac{D}{4}$

TERMINAL HEAD

4F833

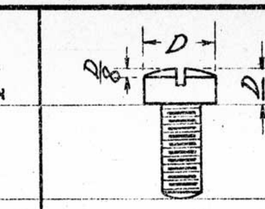

Depth of Slot $\frac{D}{4}$

RND. CHEESE HEAD

5F833

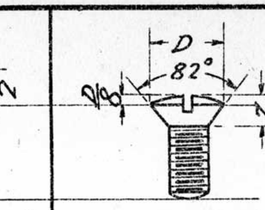

Depth of Slot $\frac{Z}{2}$

RND. CSK. HEAD

6F833

Type of Thread	Dia of Screw inches	Depth of Thread inches	Threads per inch	Drill Sizes Tapping N°	Tapping Size. ins.	Clearance N°	Clearance Size. ins.	D inches	Width of Slot inches
10 BA	·0669	·008	72·56	55	·0520	50	·0700	1/8	·027
9 BA	·0748	·009	65·2	54	·0550	48	·0760	1/8	·028
8 BA	·0866	·010	59·11	51	·0670	43	·0890	3/16	·030
7 BA	·0984	·011	52·9	48	·0760	38	·1015	3/16	·032
6 BA	·1102	·012	47·9	44	·0860	34	·1110	3/16	·034
5 BA	·1260	·013	43·1	40	·0980	30	·1285	1/4	·037
4 BA	·1417	·016	38·5	34	·1110	27	·1440	1/4	·040
3 BA	·1614	·018	34·84	30	·1285	19	·1660	5/16	·043
2 BA	·1850	·019	31·4	26	·1470	12	·1890	5/16	·047
1 BA	·2087	·021	28·25	19	·1660	3	·2130	3/8	·051
0 BA	·2362	·024	25·4	12	·1890	—	·25	3/8	·056

Notes:-
Width of slot to be 0·173 dia +·015"
Screws to be threaded full length unless otherwise specified.
Examples of ordering
3F833. Screw 0BA 1½" long screwed ½" Brass
1F833. Screw 3BA 2" long. Steel

Note:- 1-5-20.
This drawing supersedes Drawings F47, F48, F49, F50, F107,

V.R. SCREWS
METAL THREAD
STANDARD DIMENSIONS
1.5.20

Engineer of Signals	Drawn by	Traced by
	F.W.H.	F.W.H

F833

L.108/28

SIZES OF SECTORS & PULLEYS

SECTORS				PULLEYS		
PART Nº		PREVIOUS Nº.	RAD. OF ℄ OF CHAIN	PART Nº	PREVIOUS Nº.	DIA. OF ℄ OF CHAIN
L.H.	R.H.					
1K149	2K149	13	$5\frac{3}{16}$"	1B679	7	$12\frac{7}{16}$"
3K149	4K149	6	$6\frac{3}{16}$"	2B679	6	$13\frac{1}{2}$"
5K149	6K149	7	$7\frac{1}{2}$"	3B679	5	$15\frac{1}{2}$"
7K149	8K149	8	$8\frac{7}{16}$"	4B679	4	$19\frac{1}{2}$"
9K149	10K149	5	$9\frac{1}{8}$"	5B679	3	$22\frac{1}{4}$"
11K149	12K149	4	10"	6B679	2	2'-$2\frac{1}{8}$"
13K149	14K149	3	$11\frac{1}{8}$"	7B679	1	3'-$1\frac{1}{2}$"
15K149	16K149	2	12"			
17K149	18K149	10	13"			
19K149	20K149	12	$14\frac{5}{16}$"			
21K149	22K149	1	$16\frac{1}{4}$"			
23K149	24K149	9	$17\frac{5}{16}$"			
25K149	26K149	11	$19\frac{1}{4}$"			

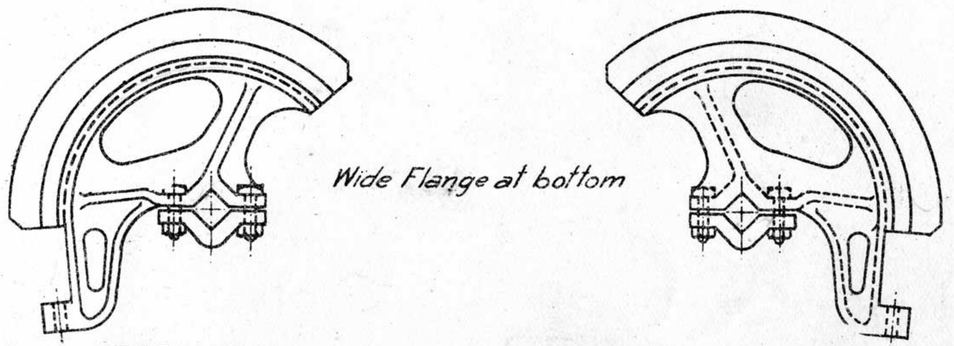

Wide Flange at bottom

LEFT HAND

RIGHT HAND

SECTORS & PULLEYS TO BE USED FOR VARIOUS ANGLES

ANGLE IN DEG..	SECTORS			PULLEYS	
	PART Nº		TRAVEL	PART Nº	TRAVEL
	L.H.	R.H.			
38	25K149	26K149	$12\frac{3}{4}$"	7B679	$12\frac{7}{16}$"
44	25K149	26K149	$14\frac{3}{4}$"	7B679	$14\frac{3}{8}$"
$50\frac{1}{2}$	25K149	26K149	17"	7B679	$16\frac{1}{2}$"
55	25K149	26K149	$18\frac{7}{16}$"	7B679	18
58	25K149	26K149	$19\frac{7}{16}$"	6B679	$14\frac{1}{4}$"
65	25K149	26K149	$22\frac{1}{8}$"	6B679	16"
69	25K149	26K149	$23\frac{1}{4}$"	6B679	$16\frac{7}{8}$"
$76\frac{1}{2}$	21K149	22K149	$21\frac{11}{16}$"	5B679	$14\frac{7}{8}$"
80	21K149	22K149	$22\frac{11}{16}$"	5B679	$15\frac{1}{2}$"
84	21K149	22K149	$24\frac{7}{8}$"	5B679	$16\frac{5}{16}$"
90	19K149	20K149	$22\frac{1}{2}$"	4B679	$14\frac{5}{16}$"
96	19K149	20K149	$24\frac{7}{8}$"	4B679	$16\frac{5}{16}$"
100	17K149	18K149	$22\frac{11}{16}$"	4B679	17"
$103\frac{1}{2}$	15K149	16K149	$21\frac{11}{16}$"	4B679	$17\frac{1}{2}$"
111	15K149	16K149	$23\frac{1}{4}$"	3B679	15"
115	13K149	14K149	$22\frac{1}{8}$"	3B679	$15\frac{1}{2}$"
122	9K149	10K149	$19\frac{7}{16}$"	3B679	$16\frac{1}{2}$"
125	7K149	8K149	$18\frac{7}{16}$"	3B679	17"
$129\frac{1}{2}$	5K149	6K149	17"	2B679	$15\frac{1}{4}$"
136	3K149	4K149	$14\frac{3}{4}$"	2B679	16"
142	1K149	2K149	$12\frac{3}{4}$"	1B679	$15\frac{7}{16}$"

Redrawn and Part Nos added. Original dated. 11-11-19

V.R. GATE GEAR
SECTORS & PULLEYS
ORDERING LIST
14-3-28

Chief Eng. Sigs. & Tels.

Drawn by L.J.P.

Traced by L.J.P.

F837

L.201/28

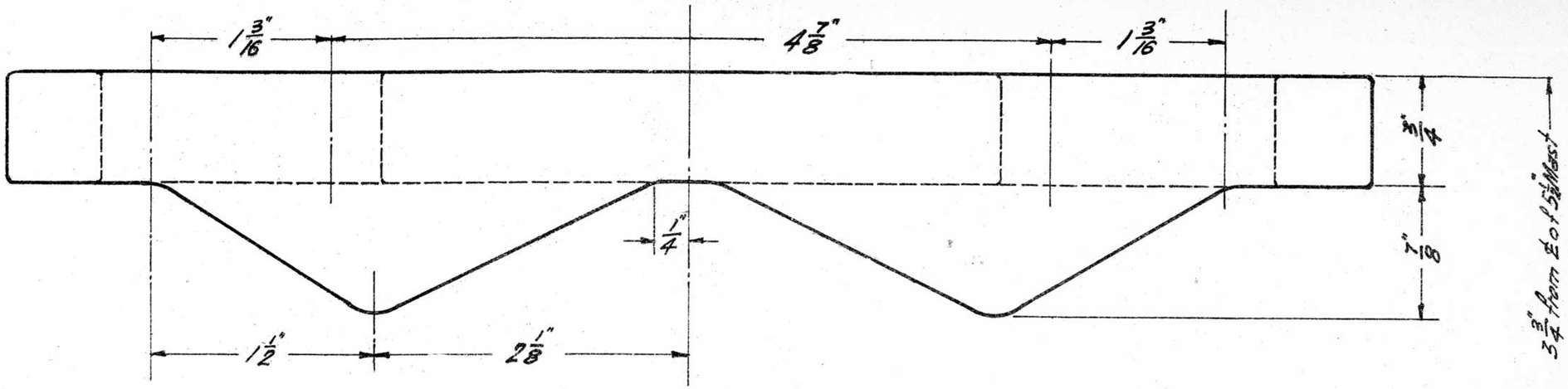

Stores
Section _____
Item No _____

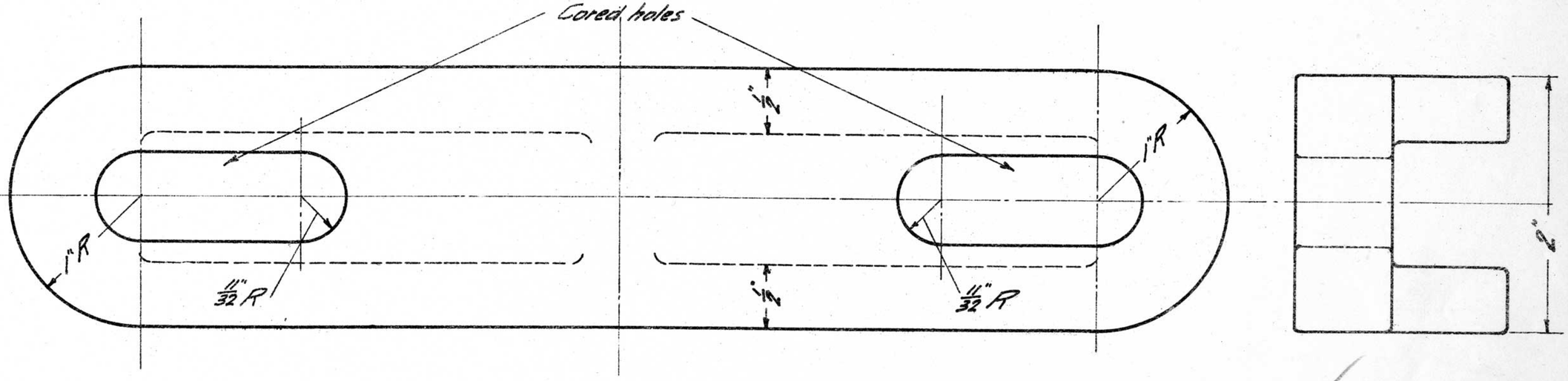

V.R. CLAMP FOR PIPE MASTS 4" TO 6½" DIA.

8-9-21

Engineer of Signals	Drawn by	Traced by	
	W.D.		F934

L.62/25

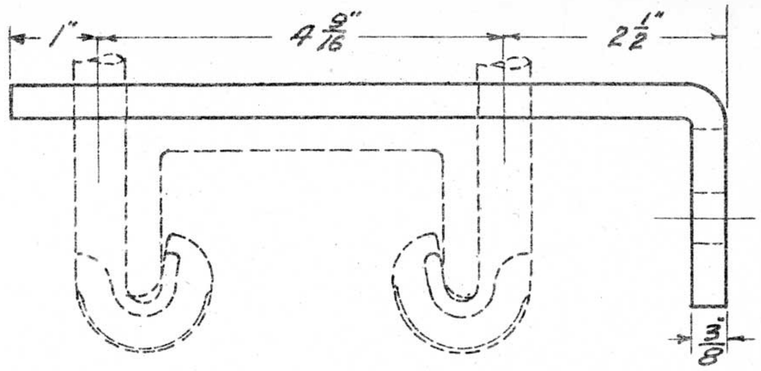

Stores
Section _____
Item No _____

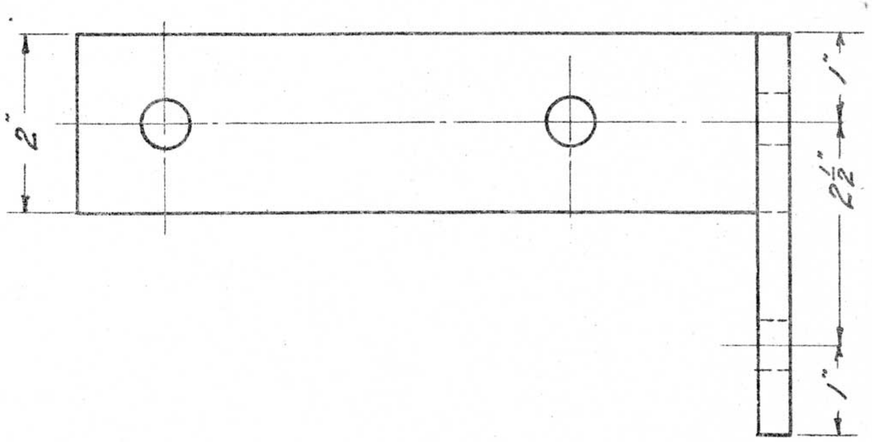

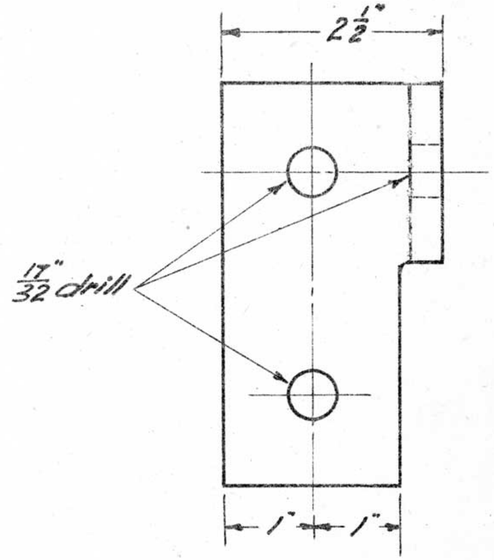

V.R. CLAMP

to carry Electric Signal Lamp on 4"x2" channel

14-10-20

Engineer of Signals	Drawn by	Traced by
	F.J.W.	F.J.W.

F964

L62/25

3 Position Triangular Type H142
2 " Vertical " H143
3 " " " H144

1 Position or Marker Type H145 (With Background)
1 " " " " 1F1023 (Without ")
For typical assembly of 1F1023 see 1B361 omitting stencil "A"

Part No	Name	Mat'l	Quantity H142	H143	H144	H145	1F1023
1N136	Case	C.I.	1				
2N136	Cover	"	1				
H138	Hood & Background	S.I.	1				
1N138	Case	C.I.		1			
2N138	Cover	"		1			
H141	Hood & Background	S.I.		1			
1K99	Case	C.I.			1		
2K99	Cover	"			1		
H146	Hood & Background	S.I.			1		
4B347	Base	C.I.				1	1
2B116	Cover	"				1	1
H147	Hood & Background	S.I.				1	
13N137	Background Mounting	C.I.				1	
12B63	Washer for 11B63	M.I.	2	2	2		
H133	Hood	S.I.					1
1N137	Carrier	C.I	3	2	3		
2N137	Canister	S.I.	3	2	3		
3N137	Lens Retaining Ring	C. Brass	3	2	3		
3B116	" " "	"				1	1
4N137	Adjusting Arm Pin	M.S	1	1	1		
5N137	Hasp Shackle Pin	"	2	2	2		
6N137	Case Supporting Pin	"	1	1	1		
5B116	Cover Pin	"				1	1
7N137	Adjusting Arm	"	1	1	1		
8N137	Hasp Shackle	"	1	1	1		
9N137	Swivel Bracket	"	1	1	1		
10N137	Hasp	C. Brass	1	1	1		
11N137	Hinge Pin	M.S.	1	1	1		
12N137	" "	"	1	1	1		
6B5	Gauze Retaining Plate	Brass	2	2	2		
7B5	Gauze	"	2	2	2		
11B63	Swivel Block	M.I.	1	1	1		
A2	Terminal Block		3	2	3		
6B116	Lamp Base	Wood	3	2	3	1	1
1A58	Lamp Holder		6	4	6	2	2

Part No	Name	Mat'l	Quantity H142	H143	H144	H145	1F1023
16N137	Lamp Base	Wood	3	2	3		
2F833	Screw No OBA - 7/8 long - Screwed 1/2"	Brass	6	4	6		
2F833	" " 2BA - 1" " - " 1/2"	"	6	4	6	4	4
1F833	" " " - 3/8" - " 1/4"	"	8	8	8		
1F833	" " 1BA - 5/16" " - " 1/4"	M.S.				4	8
1F833	" " 4BA - 5/16" " - " 1/4"	"					2
3F833	" " 4BA - 1/4" " - " 1/4"	Brass	9	6	9		
1F833	" " 1BA - 1 1/4" " - " 1/2"	M.S.				4	
1F833	" " 4BA - 1 1/4" " - " 1/4"	"				2	
2F833	" " 2BA - 2 1/2" " - " 1/2"	Brass	6	4	6		
Stock	Lens - 5" Red	Glass	1	2 color specified	1	1 color specified	1 color specified
"	" " Green	"	1		1		
"	" " Yellow	"			1		
"	Lens Packing	Asbestos	3	2	3	2	2
"							
"	Cover Packing	Greasy Hemp	(As required)				
"	Bolts 1/4" Whit. - 5/8" long & nuts	M.S	16	16	20	10	
"	Screws 5/16" Whit. - Cheese Head 7/8" long	"	9	6	9		
"	Gas Plug	C.I.	1				
"	Washers 5/8" x 1/16"	M.S	2	2	2		
	" 1/2" x 1/16"	"	1		1		
"	Split Pin 3/16"	"	2	2	2		
"	" " 1/8"	"	3	2	3		
"	Nuts 5/8"	"	2	2	2		
"	Chain 13" long	"				1	1
"	Setscrew 3/8" Hex. Head - 1/2" long	"				2	2

30-10-24 Alteration No 87 R.G.C.
19-2-24 Alteration No 67 S.C.A.
22-11-22 Alteration
Part 1F1023 added
Redrawn Original number same title dated 14.12.20
V.P. LIGHT SIGNALS MATERIAL LIST 16-3-22
Traced by R.G.C.
Drawn by R.G.C. W.P.
Engineer of Signals
F1023
F1023
L.63/25

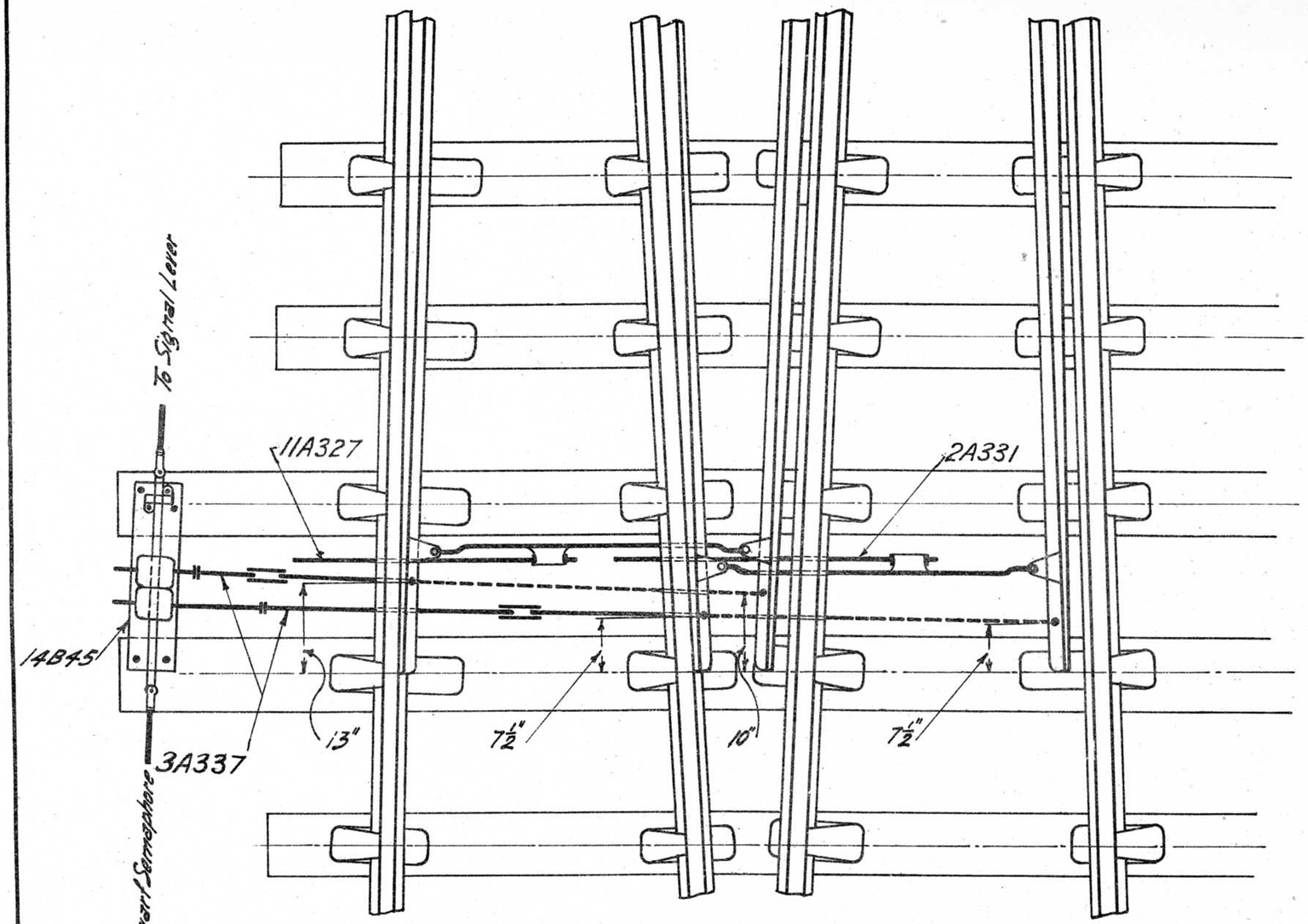

Note:-

Arrangement showing the drilling of the blades & position of rods for mechanical detection of two blades by one Dwarf Semaphore.

This drawing to be read in conjunction with drawing E46.

V.R. POINT DETECTION
DOUBLE COMPOUND
Layout Class X

16-9-21

Engineer of Signals	Drawn by	Traced by	
	F.J.W.	F.J.W.	F1212

L.82/25

Y dimensions vary according to the class of Layout and method of applying apparatus. When ordering state length of "Y" required.

Characteristic Sketches	Description of General Use	Insulated or Non-insulated	Part Nos and Where Used					
			100 & 115 lbs. Rails.		80 & 95 lbs. Rails.		60, 66, & 75 lbs. Rails.	
			L. H.	R. H.	L. H.	R. H.	L. H.	R. H.
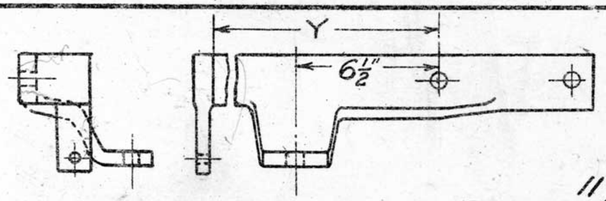	Compounds when both sets of points have Lock Rod Spreaders, and Blades are detected.	Insulated	1B66	2B66	1B67	2B67		
		Non-insulated	~~5B66~~	~~6B66~~	~~5B67~~	~~6B67~~		
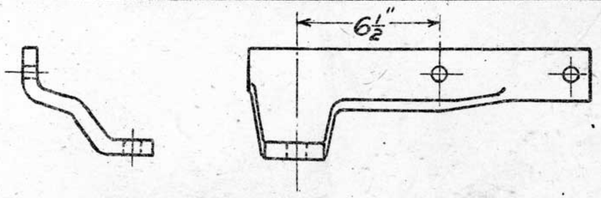	Compounds when both sets of points have Lock Rod Spreaders, & Blades are NOT detected.	Insulated	7B66	8B66	7B67	8B67		
		Non-insulated	~~11B66~~	~~12B66~~	~~11B67~~	~~12B67~~		
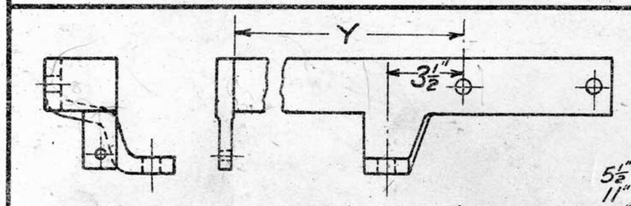	Points that have Lock Rod Spreaders, and Blades are detected	Insulated	1B36	2B36	1B47	2B47		
		Non-insulated	~~5B36~~	~~6B36~~	~~5B47~~	~~6B47~~		
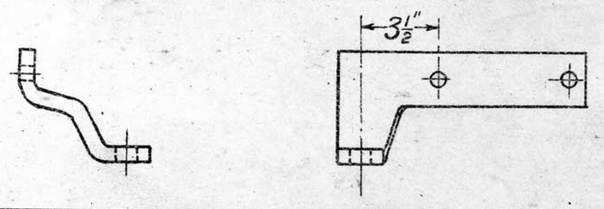	Points that have Lock Rod Spreaders, and Blades are NOT detected	Insulated	7B36 ~~7B36~~	8B36 ~~8B36~~	7B47 ~~7B47~~	8B47 ~~8B47~~		
		Non-insulated	~~11B36~~	~~12B36~~	~~11B47~~	~~12B47~~		
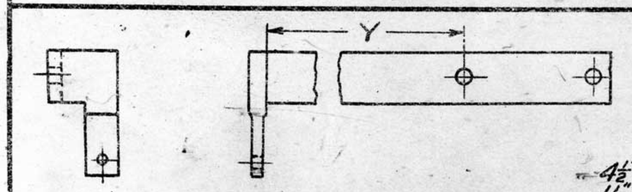	Blades that are detect-ed only.	Insulated	1B68	2B68	1B69	2B69	1B77	2B77
		Non-insulated	~~5B68~~	~~6B68~~	~~5B69~~	~~6B69~~	~~5B77~~	~~6B77~~

Detector Lug Modified
See Blueprint after 17-8-36
1337.22

V.R. Point Layouts
Material List for Switch Extension Pieces 2-6-22

Engineer of Signals | Drawn by R.G.C. | Traced by R.G.C.

F1301

L.224/23

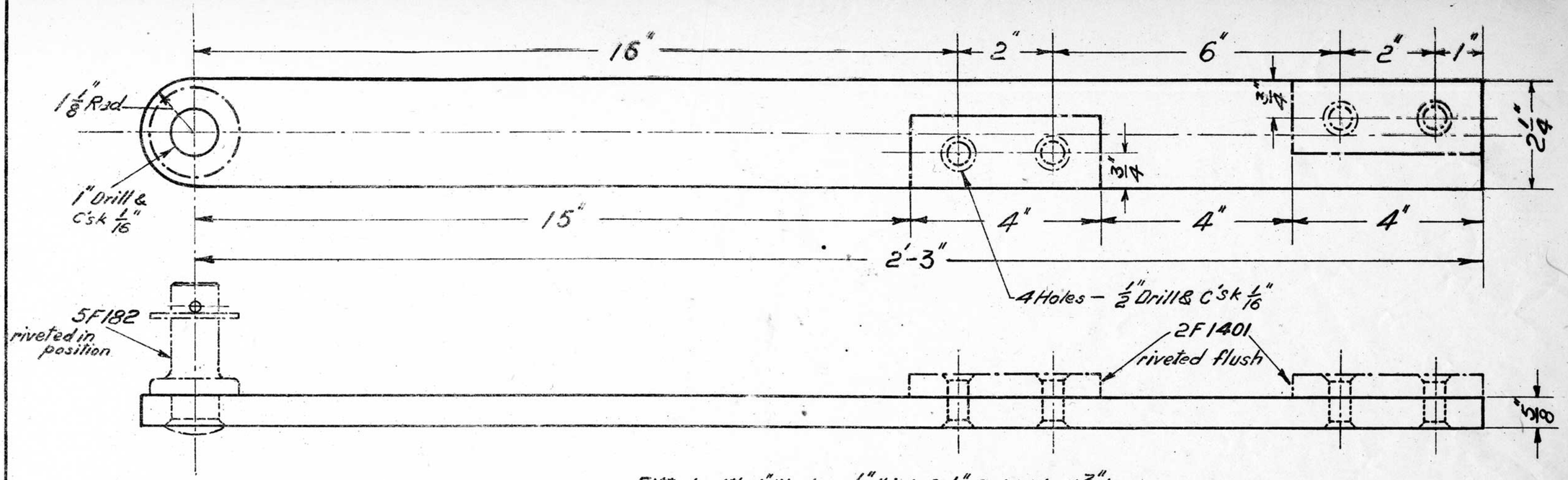

Fitted with 1" Washer 1/8" thick & 1/4" Split Pin 1 3/4" Long

Stores
Section ____
Item No. ____

28.10.22

M.S
PLUNGER

Complete 1F1401

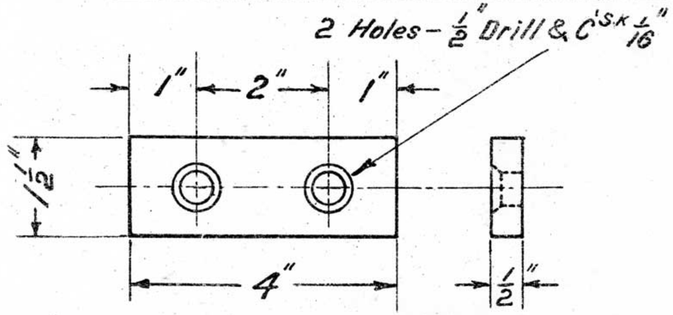

To be Case hardened

28.10.22

M.S
LOCKING SNIB

2F1401

Parts 4F1401 & 5F1401 added

See B. Lockprint after

21.9.26.

2838.22

V.R. PLUNGER Staggered Snibs 28.10.22	Chief Engr of Sigs & Telegs	Drawn by C.E.W	Traced by C.E.W	F1401

L.224/23

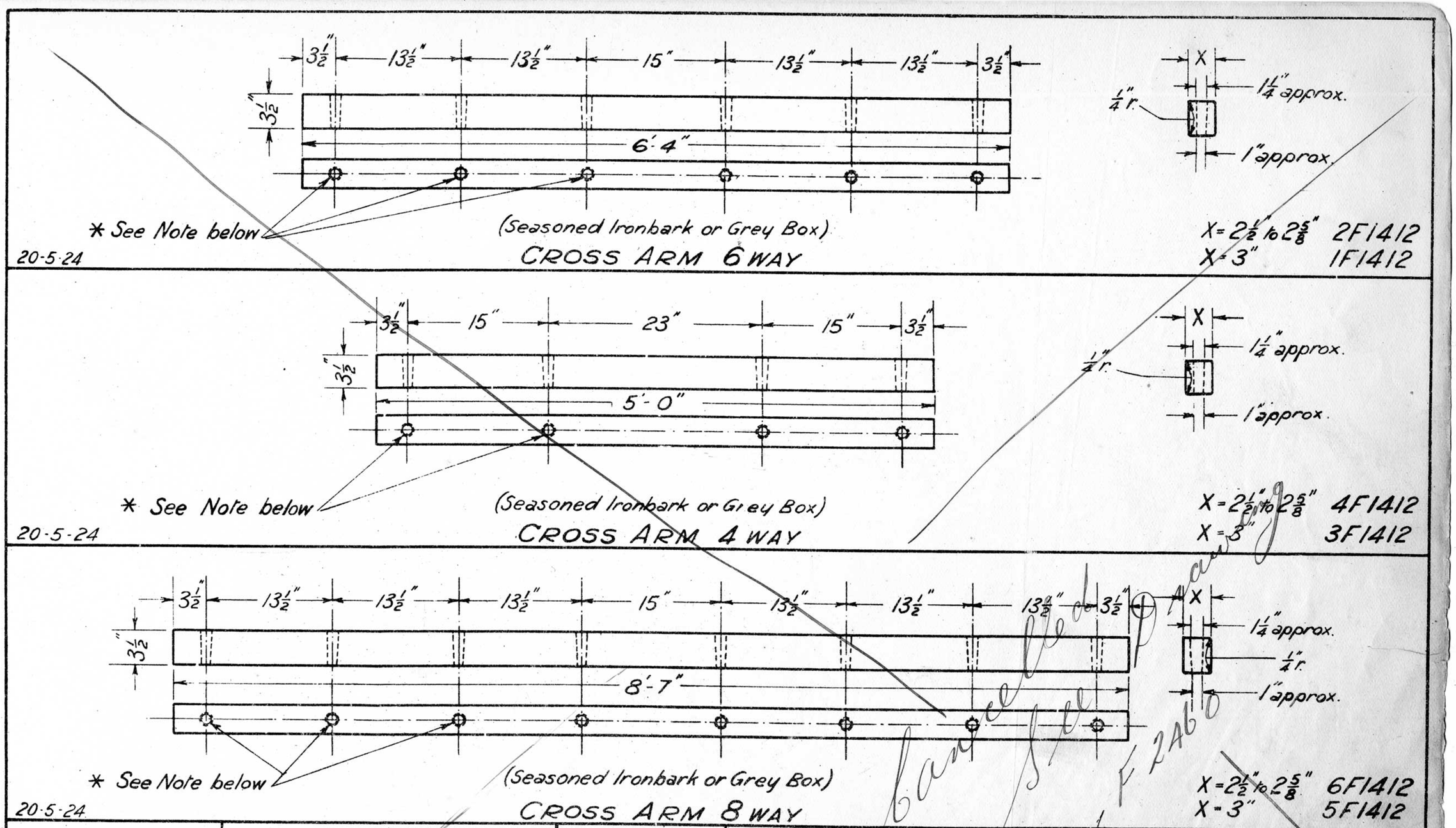

	* Insulator holes taper bored to Standard gauge provided by the Chief Engr. of Signals & Telegraphs. Dimensions cover finished material after machine dressing.	Redrawn-Original under same title dated 1-12-22 – Parts 5F1412 & 6F1412 added.	VICTORIAN RAILWAYS CROSS ARMS FOR TELEGRAPH POLES 20-5-24	Chief Engr. of Sigs & Tels.	Drawn by R.G.C.	Traced by R.G.C.	F1412

L.201/28

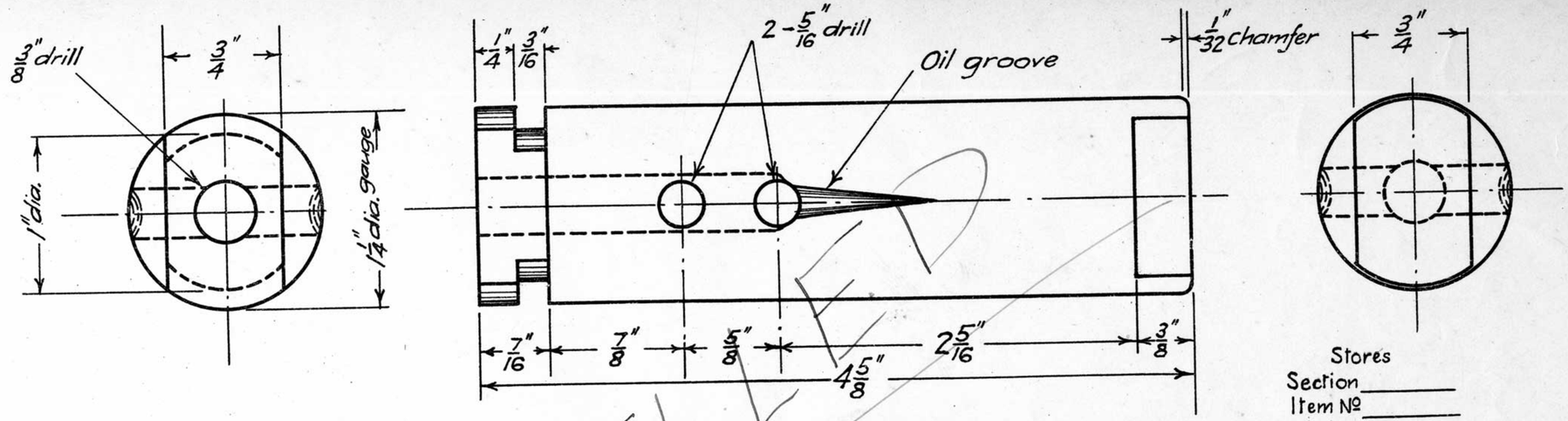

Stores
Section _____
Item No _____

Case hardened
1/4" Bright Shafting
Pin

~~See Note~~
See plan ammended 7/8/39

1F1437

20-8-23

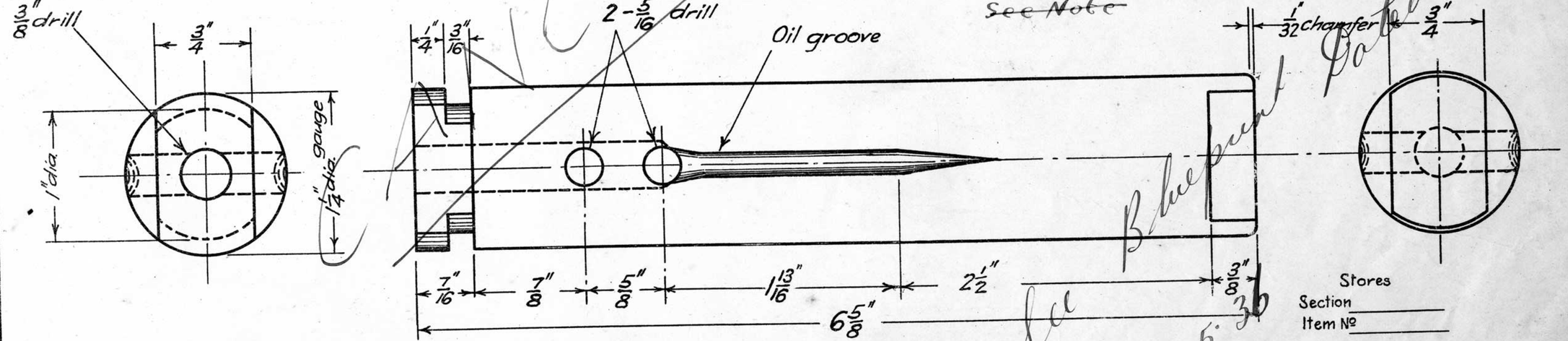

Stores
Section _____
Item No _____

Case hardened
1" 1/4 Bright Shafting
Pin

2F1437

20-8-23

See plan ammended 7/8/39.

Note - ~~See B.P. No F1437~~
~~Date 21/5/36~~

Redrawn 20-8-23
Part No 2F1437
added

V.R. PIN
FOR CRANK STAND & COMPENSATOR
TYPE "C" 20-8-23

Chief Engr of Sigs. & Tels.

Drawn by S.C.O.

Traced by S.C.O.

F1437

L.238/23

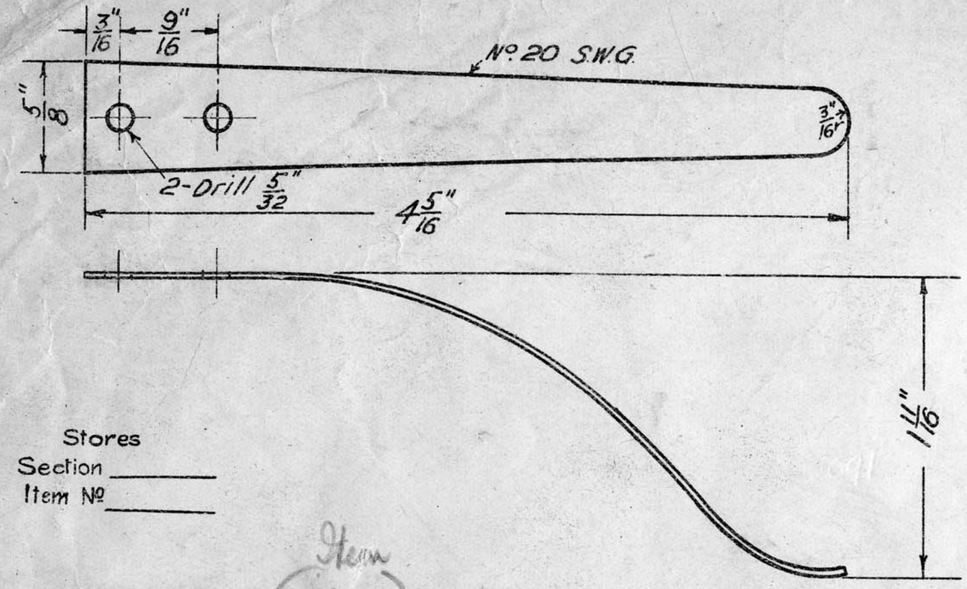

Stores
Section _____
Item No _____

Item (1836)

6·4·23

1F1458

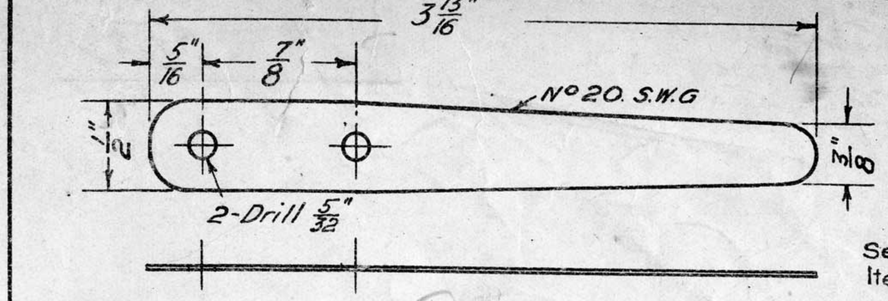

Stores
Section _____
Item No _____

(1833)

6·4·23

3F1458

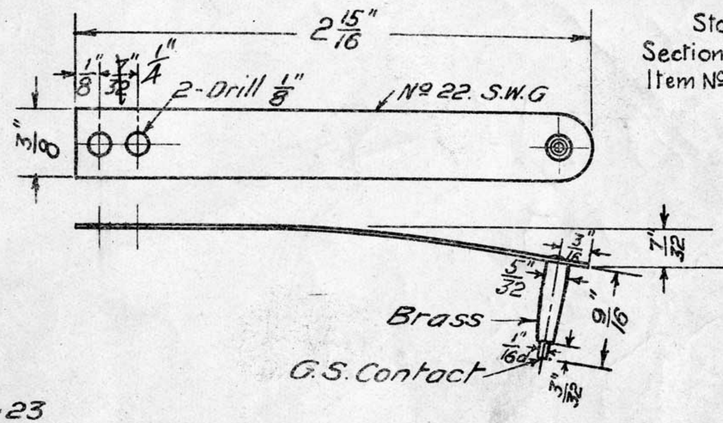

Stores
Section _____
Item No _____

(1832)

6·4·23

4F1458

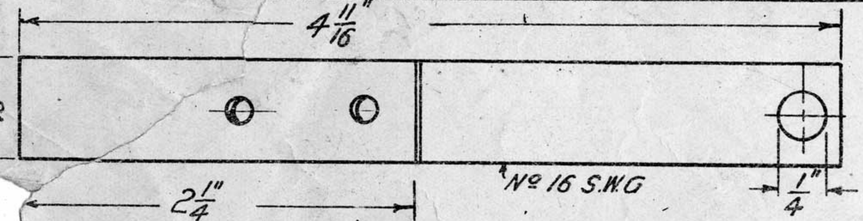

Stores
Section _____
Item No _____

1/64"
G.S. Contact
7/32"

(2257)

2F1458

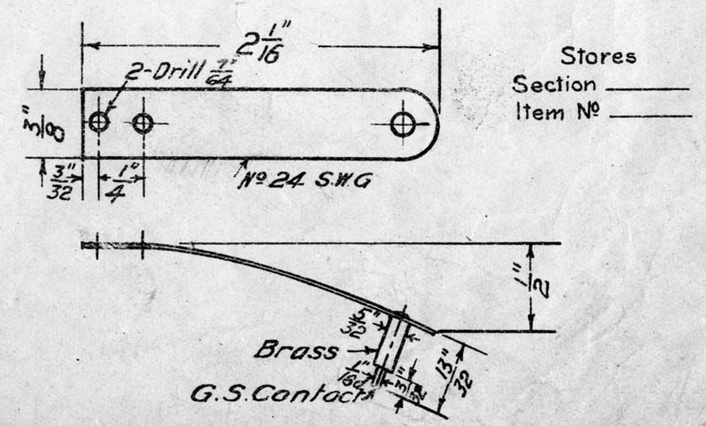

Stores
Section _____
Item No _____

(1838)

6·4·23

5F1458

V.R. SPRINGS FOR LARGE STAFF INSTRUMENT 6·4·23	Chief Engr of Sigs & Tels	Drawn by V.G.C	Traced by V.G.C	F1458

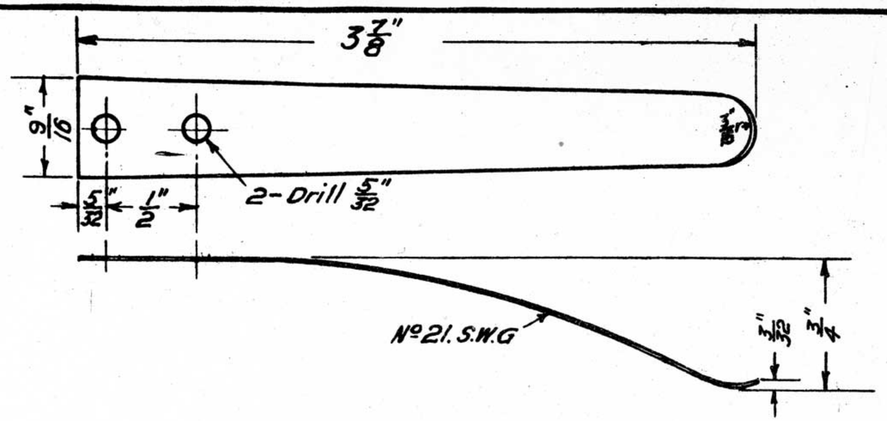

6·4·23 **Lever Spring** 1F1459

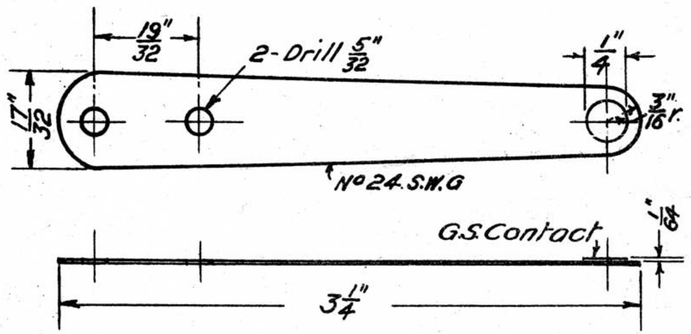

6·4·23 **Cutout Contact Spring** 2F1459

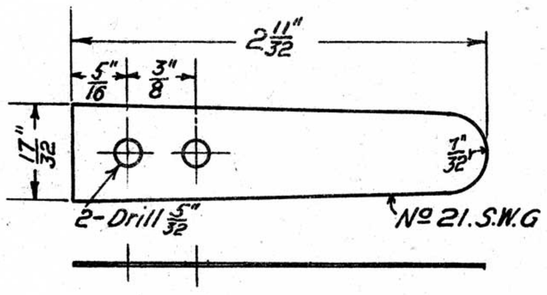

6·4·23 **Cutout Spring** 3F1459

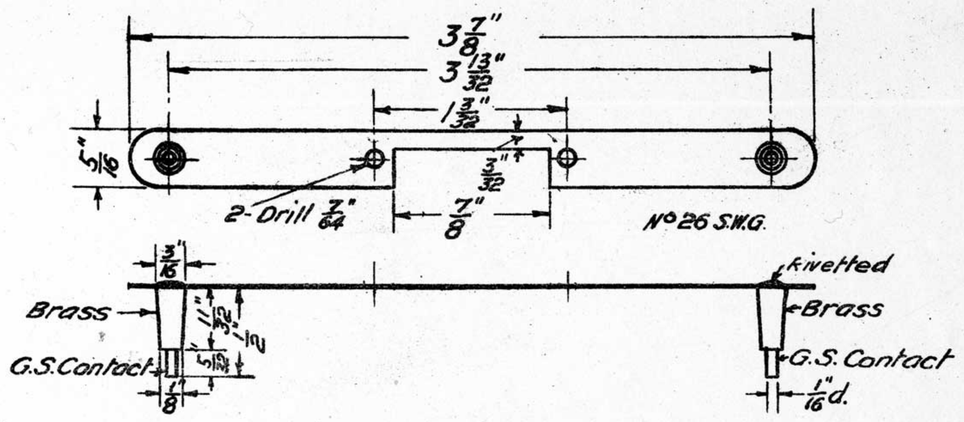

6·4·23 **Lever Contact Spring (double)** 4F1459

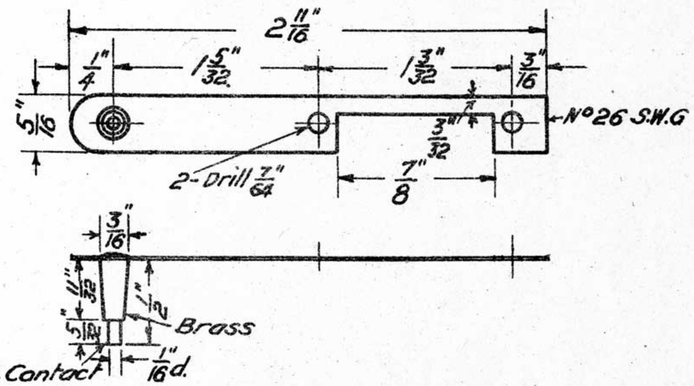

6·4·23 **Lever Contact Spring (single)** 5F1459

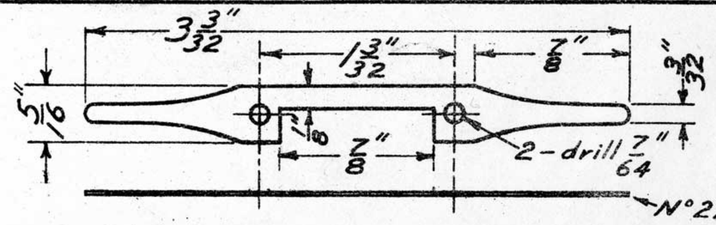

5·6·25 **Keeper (for parts 4 & 5F1459)** 6F1459

	1 5.6.25 Part No 6F1459 added E.A.	V.R. SPRINGS FOR MINATURE STAFF INSTRUMENT 6·4·23	Chief Engr of Sigs & Tels	Drawn by V.G.C	Traced by V.G.C F1459

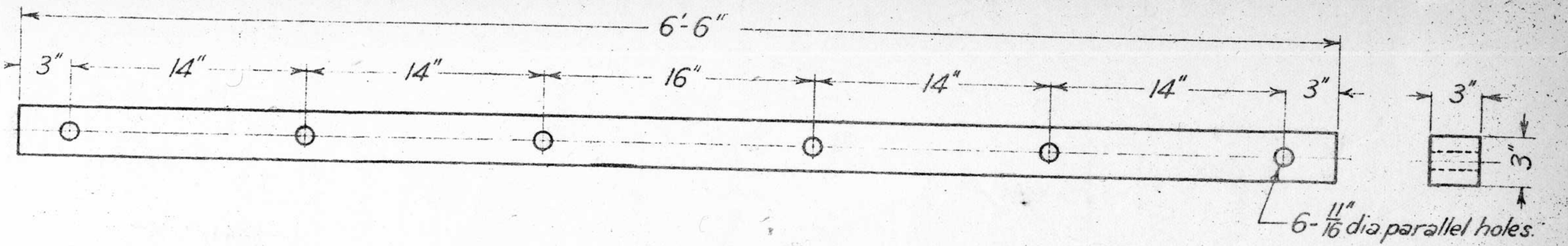

11-10-27.

P.M.G. TYPE CROSS ARM Seasoned Messmate or Stringybark.

1F1464

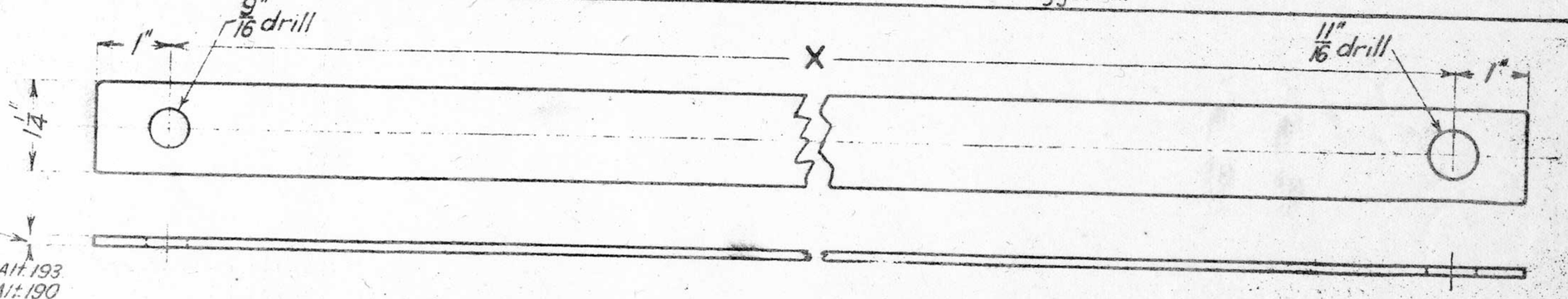

11-2-28 / Alt. 193
19-12-27 / Alt. 190
11-10-27 / Alt. 187
7-8-26 / Alt. 149

BRACE M.S. Galvanized.

X=23½"—4F1464
X=18"—2F1464

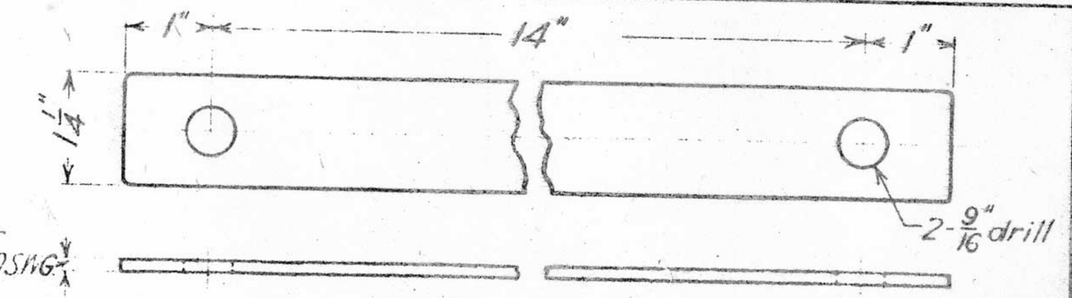

19-12-27

BRACE M.S. Galvanized. 3F1464

	1 19-12-27 Part No 3F1464 added and Alt. No 190. E.C.M.	Redrawn Previously under same No & title dated 23-2-23.	V.R. CROSS ARM & BRACE FOR TELEGRAPH POLE 11-10-27	Chief Engr Sigs. & Tels. 1	Drawn by E.C.M. / Traced by E.C.M.

F1464

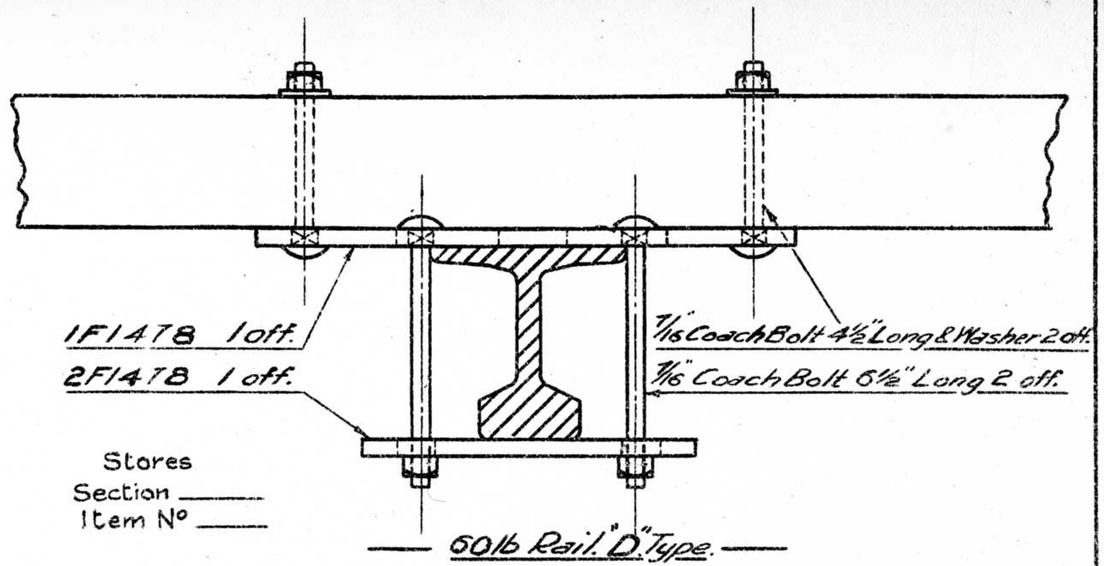

21-3-23. Clamp Complete 1F1479.

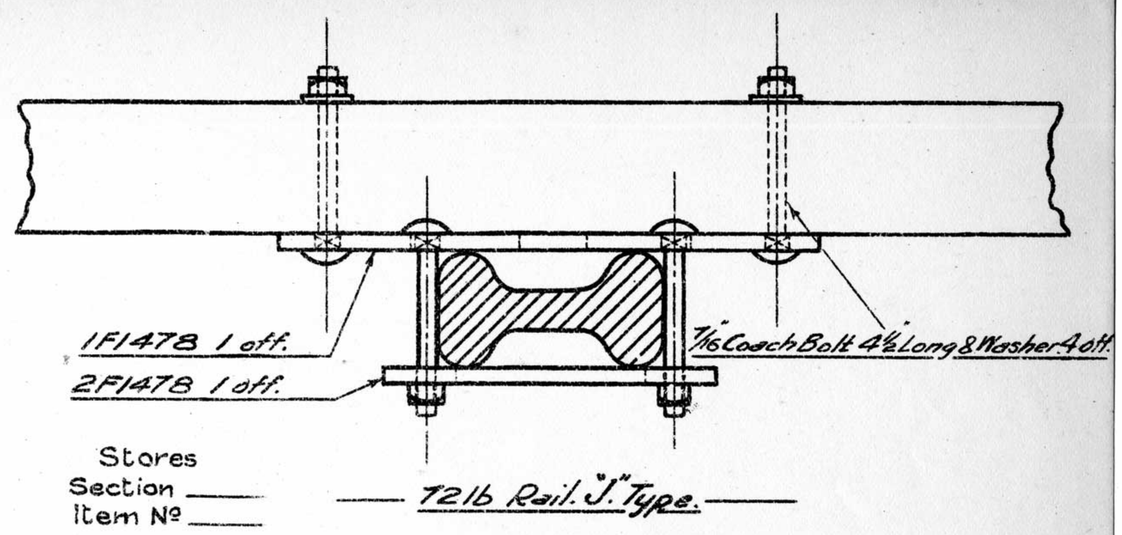

21-3-23. Clamp Complete 3F1479.

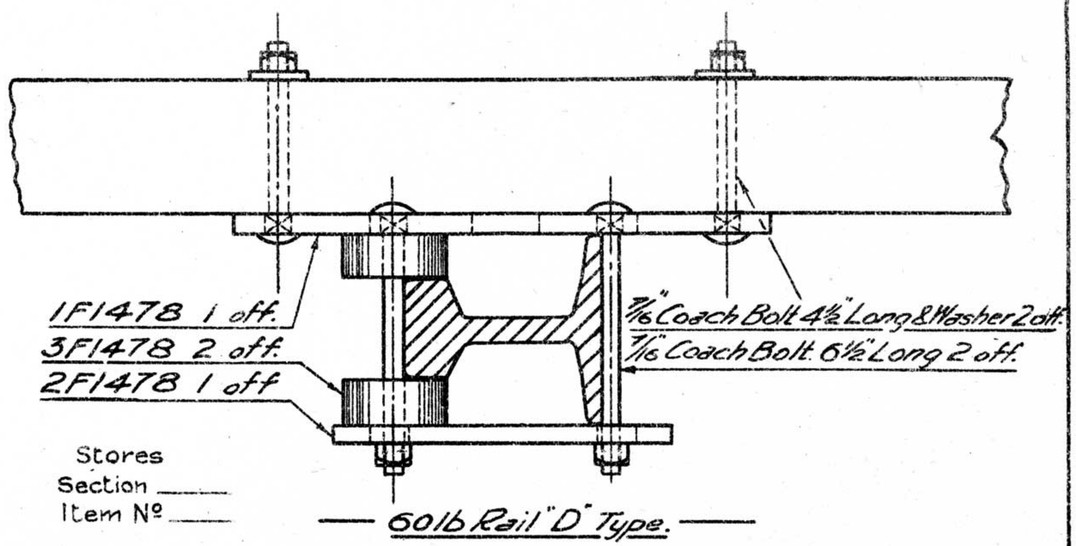

21-3-23 Clamp Complete 2F1479.

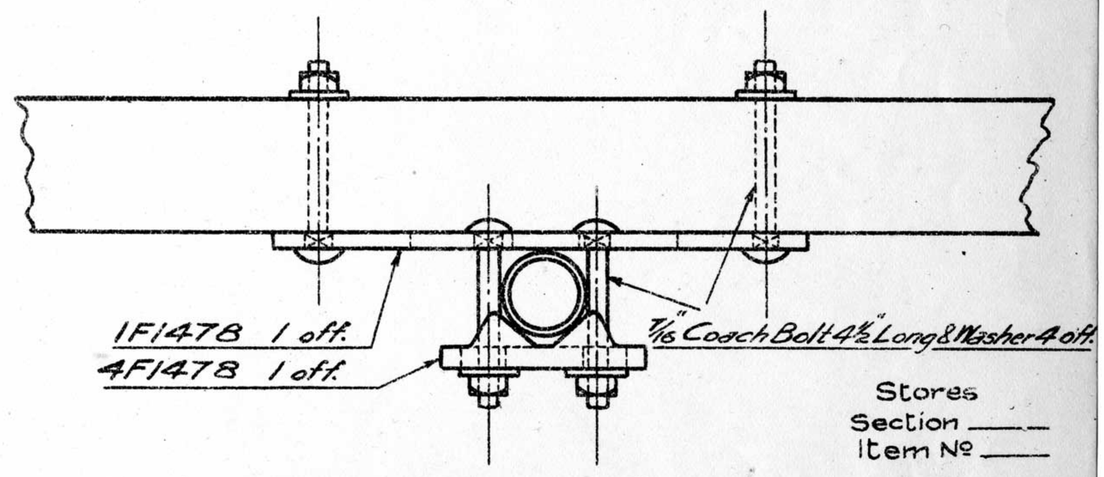

21-3-23. Clamp Complete 4F1479.

V.R. Assemblies of CLAMPS FOR CROSS ARMS ON P.M.G. POLES.
21-3-23 Scale:- ¼" = 1 Inch.

Chief Eng.r Sigs & Tels.

Drawn By W.J.K.

Traced By W.J.K.

F1479

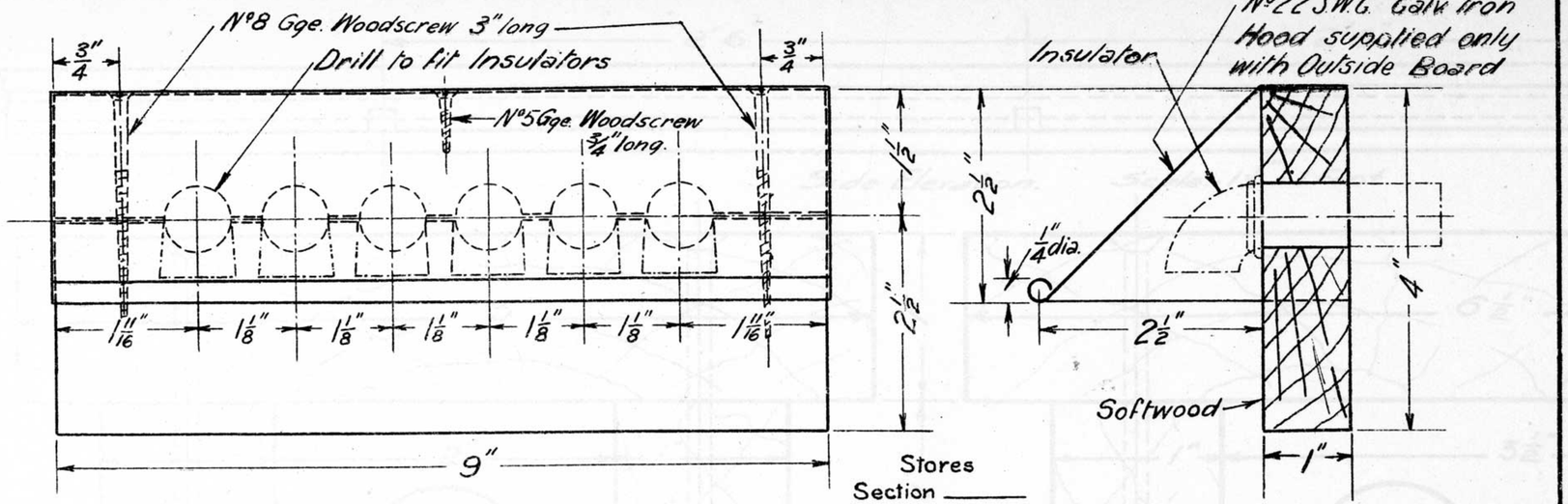

Stores
Section ____
Item № ____

Straight Insulators to be supplied with Inside Board
Drip " " " " " Outside "

Inside Board 7F1483
Outside " 6F1483

5-4-23

Inlet Board (6 Way)

Inside & Outside Boards complete 1F1483

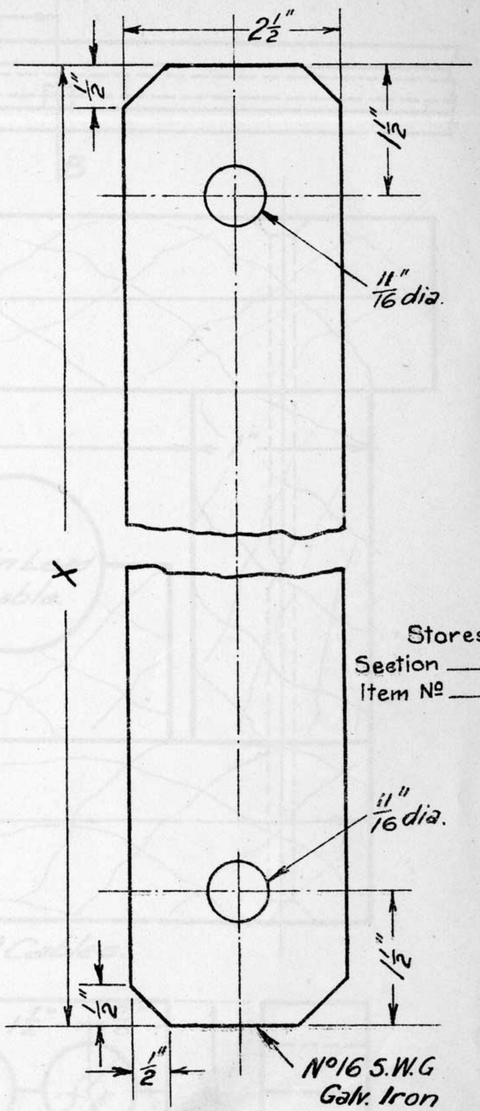

Stores
Section ____
Item № ____

X=20" 5F1483
X=10" 4F1483
X=7½" 3F1483

Shackle Iron

5-4-23.

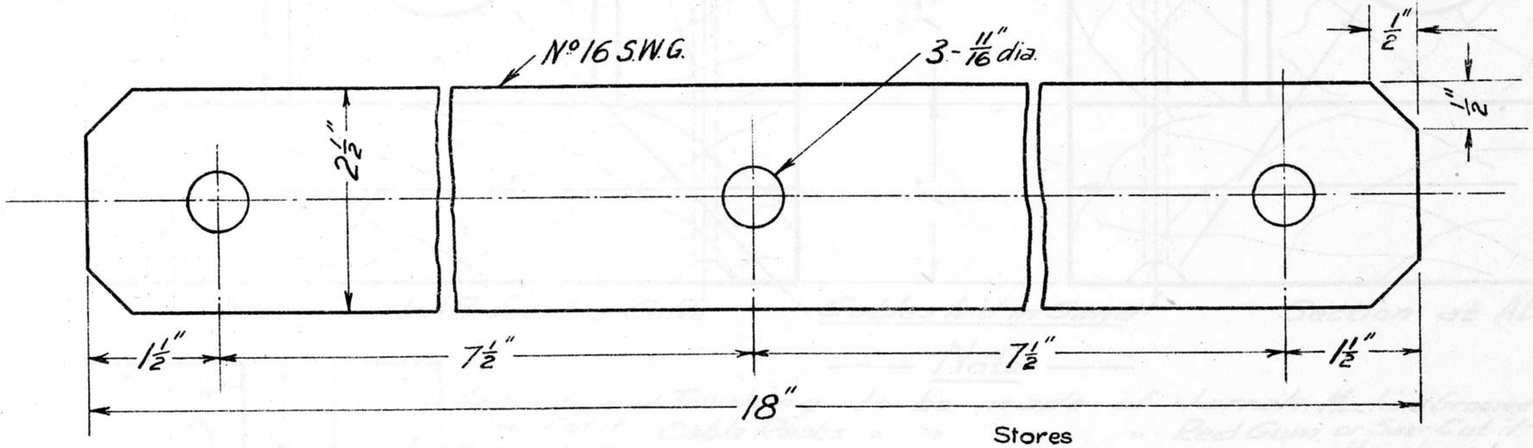

Stores
Section ____
Item № ____

5-4-23

Shackle Iron (№16 S.W.G. Galv. Iron)

2F1483

L.238/23

V.R. Telegraph Line Fittings. Details 5-4-23.

Chief Engr of Sigs. & Tels.

Drawn by R.G.C.

Traced by R.G.C.

F1483

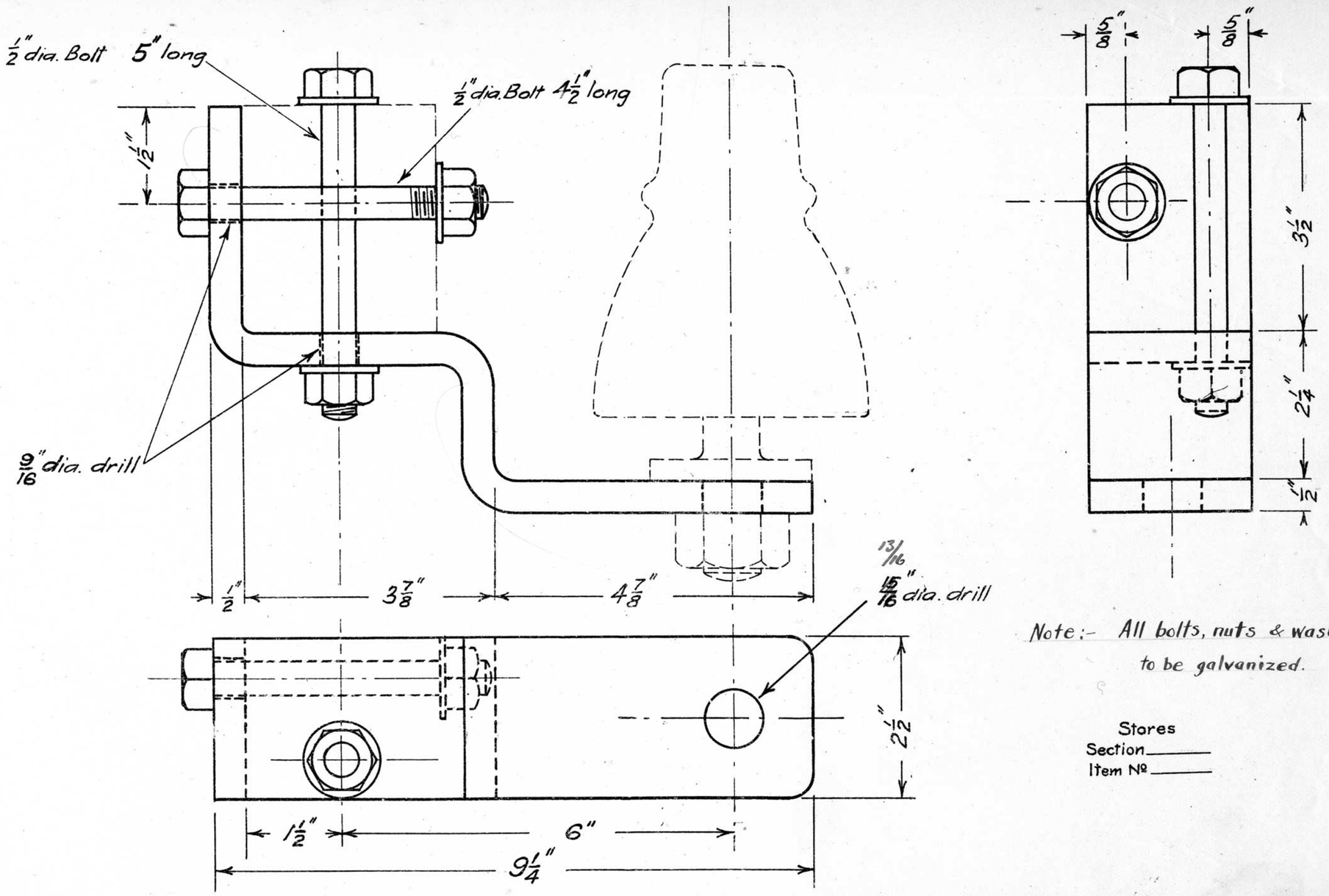

Note:- All bolts, nuts & washers to be galvanized.

Stores
Section_____
Item Nº_____

30-5-23 TERMINATING BRACKET (FOR A INSULATORS) W.I. Galvanised 2896-23 1F1508

L.234/23	Alteration Nº 499 15-9-42	V. R. TELEGRAPH LINE FITTINGS	Chief Engr. of Sigs. & Tels.	Drawn by S.C.O.	Traced by S.C.O.	F1508

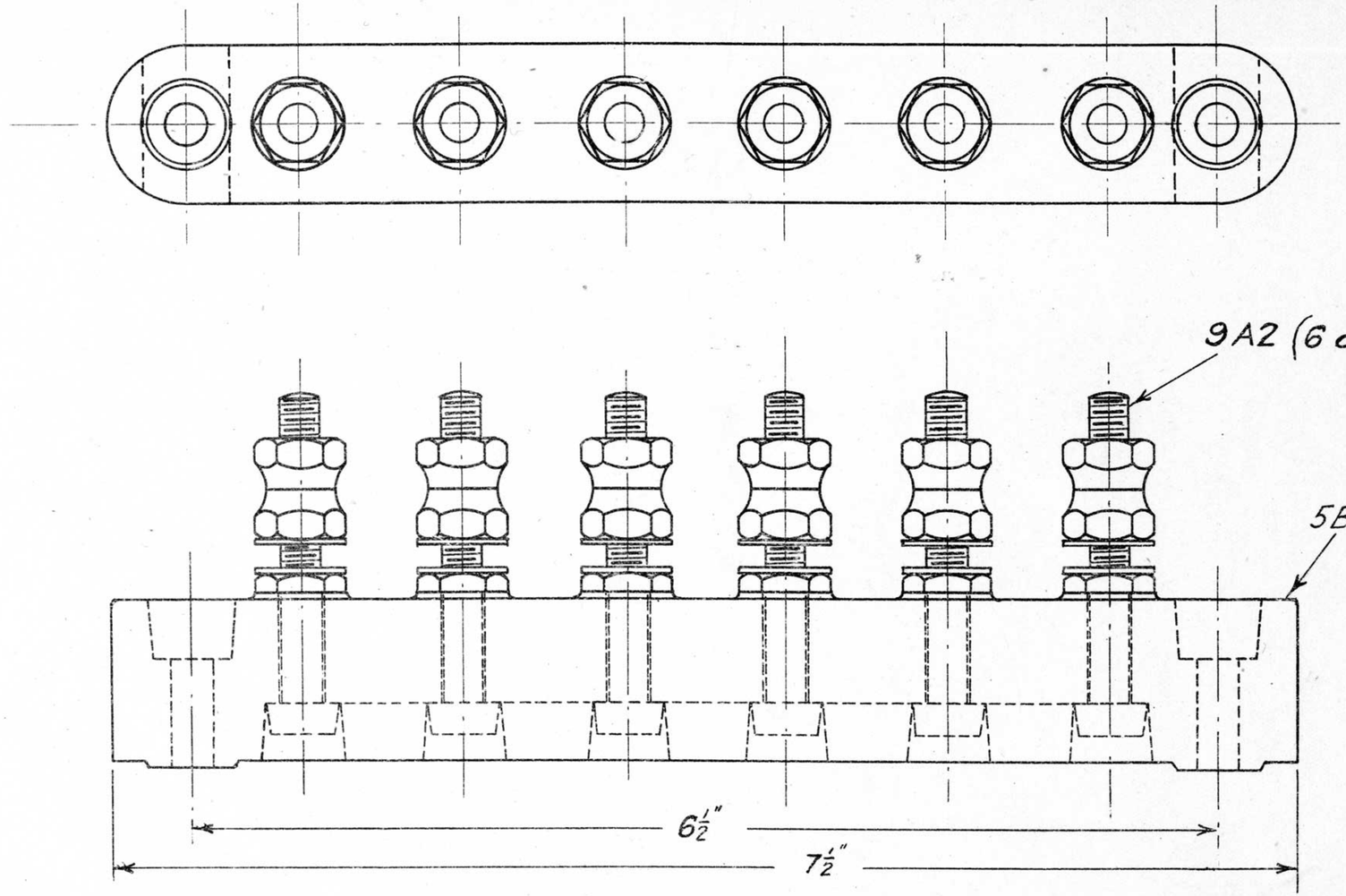

Connecting Strips to be ordered separately as required (see Drg. F134)

12-6-23

Terminal Block (complete)

1F1527

	TERMINAL BLOCK 6-WAY Scale:- Full Size 12-6-23	Chief Engr of Sigs & Tels	Drawn by S.C.O.	Traced by S.C.O.
L.261/23				F1527

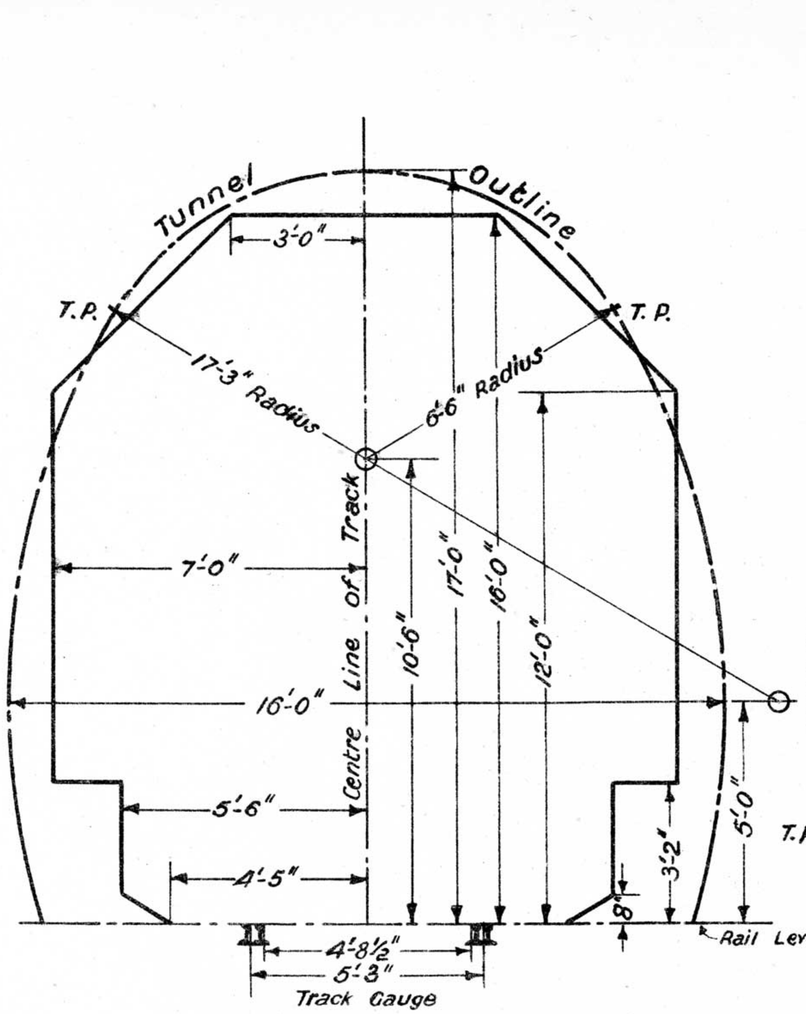

GAUGE FOR SINGLE LINE RAILWAY

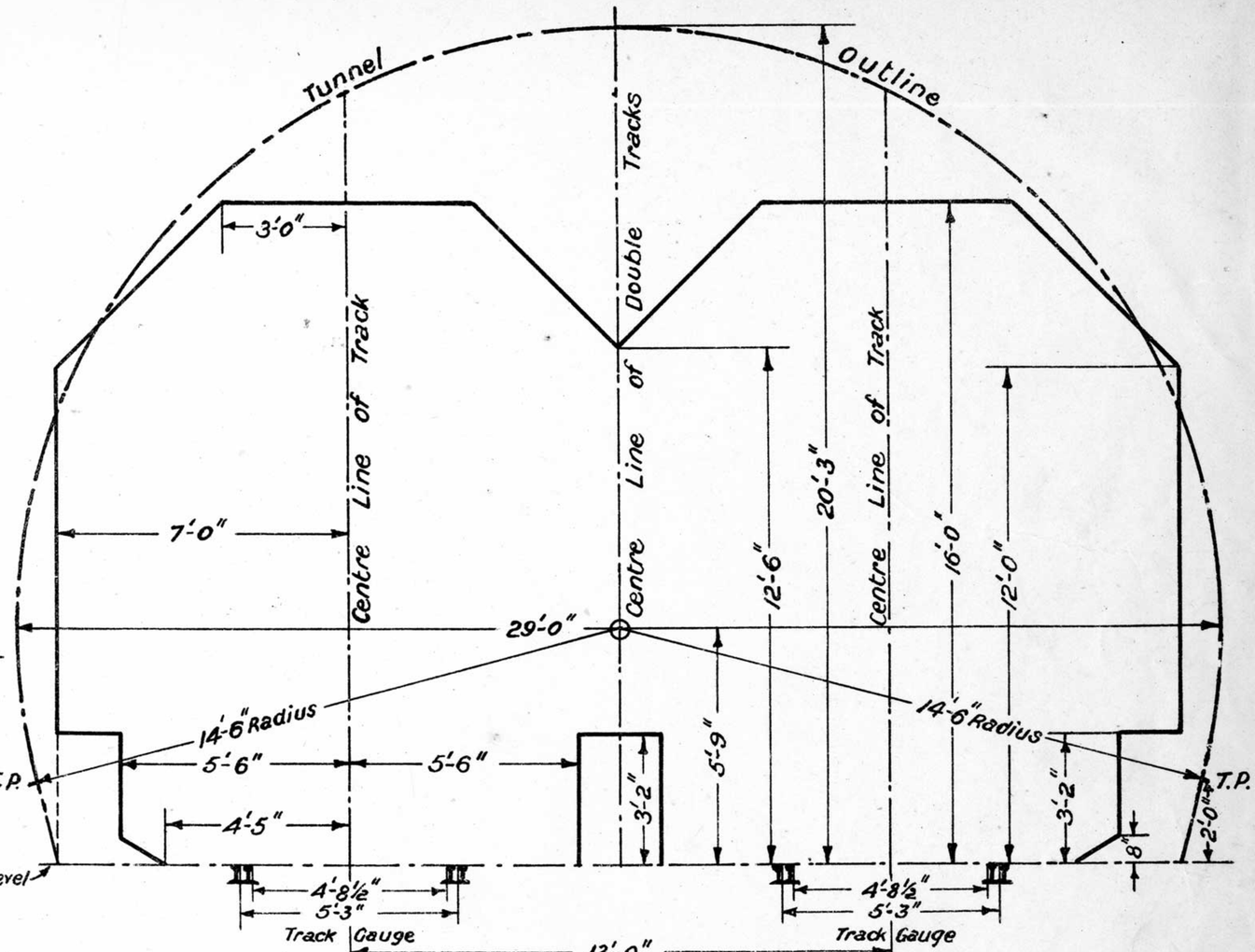

GAUGE FOR DOUBLE-LINE RAILWAY

NOTE The lateral distances between centre line of track and structures above and below platform level must be increased on curves of 40 chains radius and under as specified in Way and Works Book of Instructions.

L239/23

V.R.
MINIMUM STRUCTURE GAUGE
Australian Railways Standard 1923
Scale 1/4" = 1 foot 4-8-23

Chief Engr. for Sig & Teleg

Drawn by L.188/23

Traced by C.E.W.

F1577

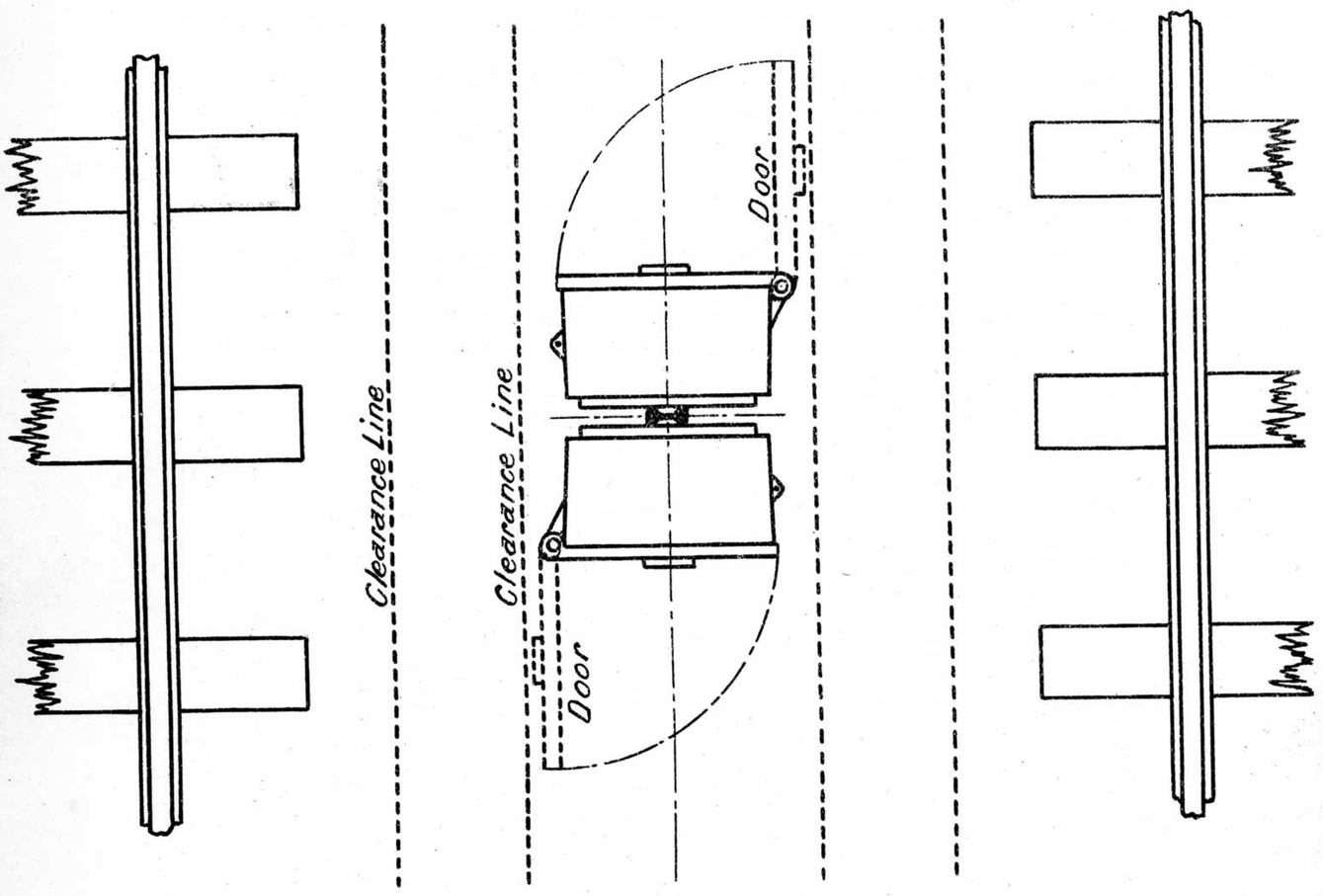

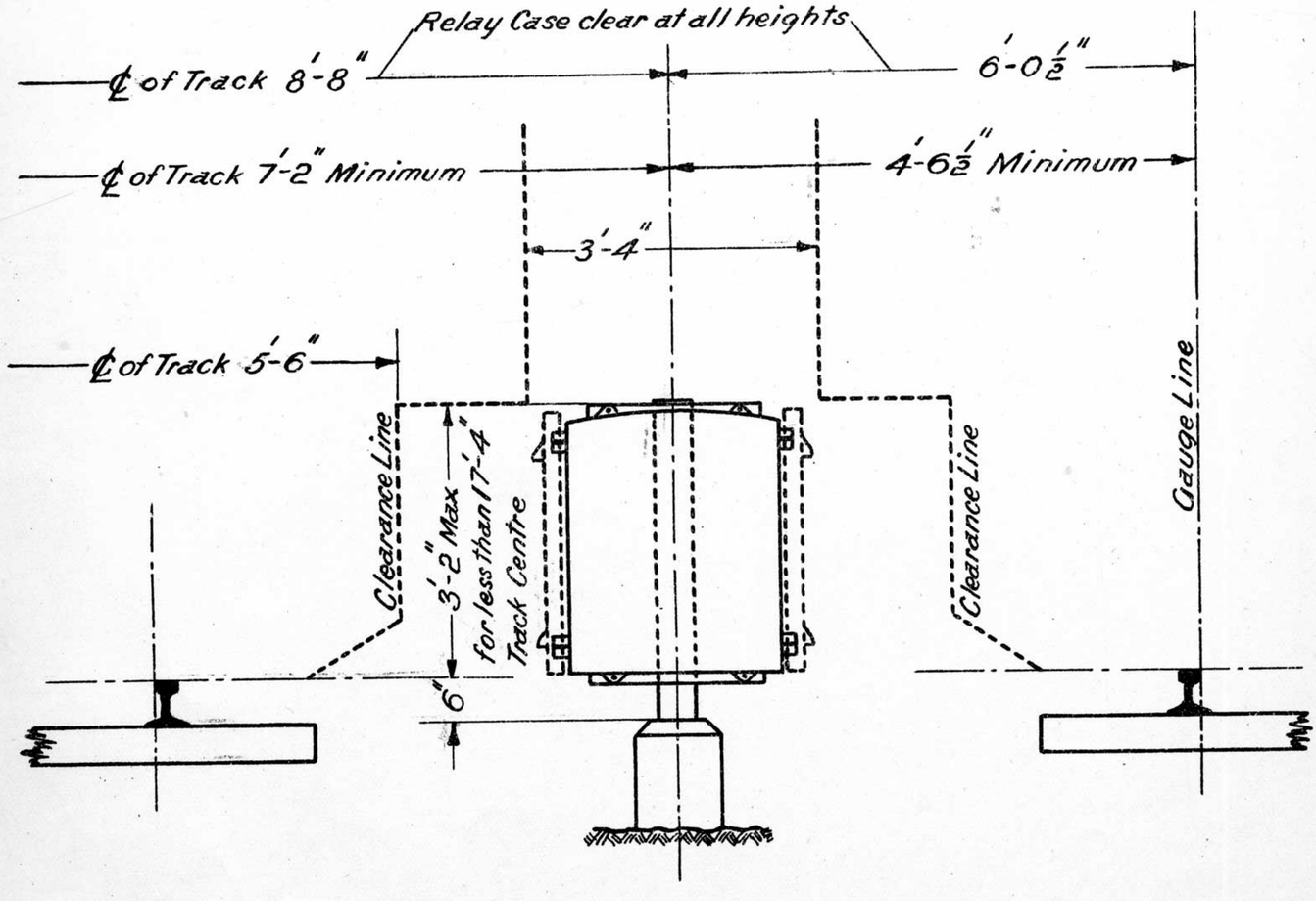

Clearances shown are for Tangent Tracks, any other condition will require special consideration

Opening of Door limited to 90°

F1578	L.235/23	Redrawn & Revised Original drawing No A28 dated 11-8-16	V.R. CLEARANCE DIAGRAM FOR RELAY CASE Scale - ½" = 1 foot 31.7.23	Chief Eng of Sig & Telegs	F1578
			Drawn by C.E.W. / Traced by C.E.W.		

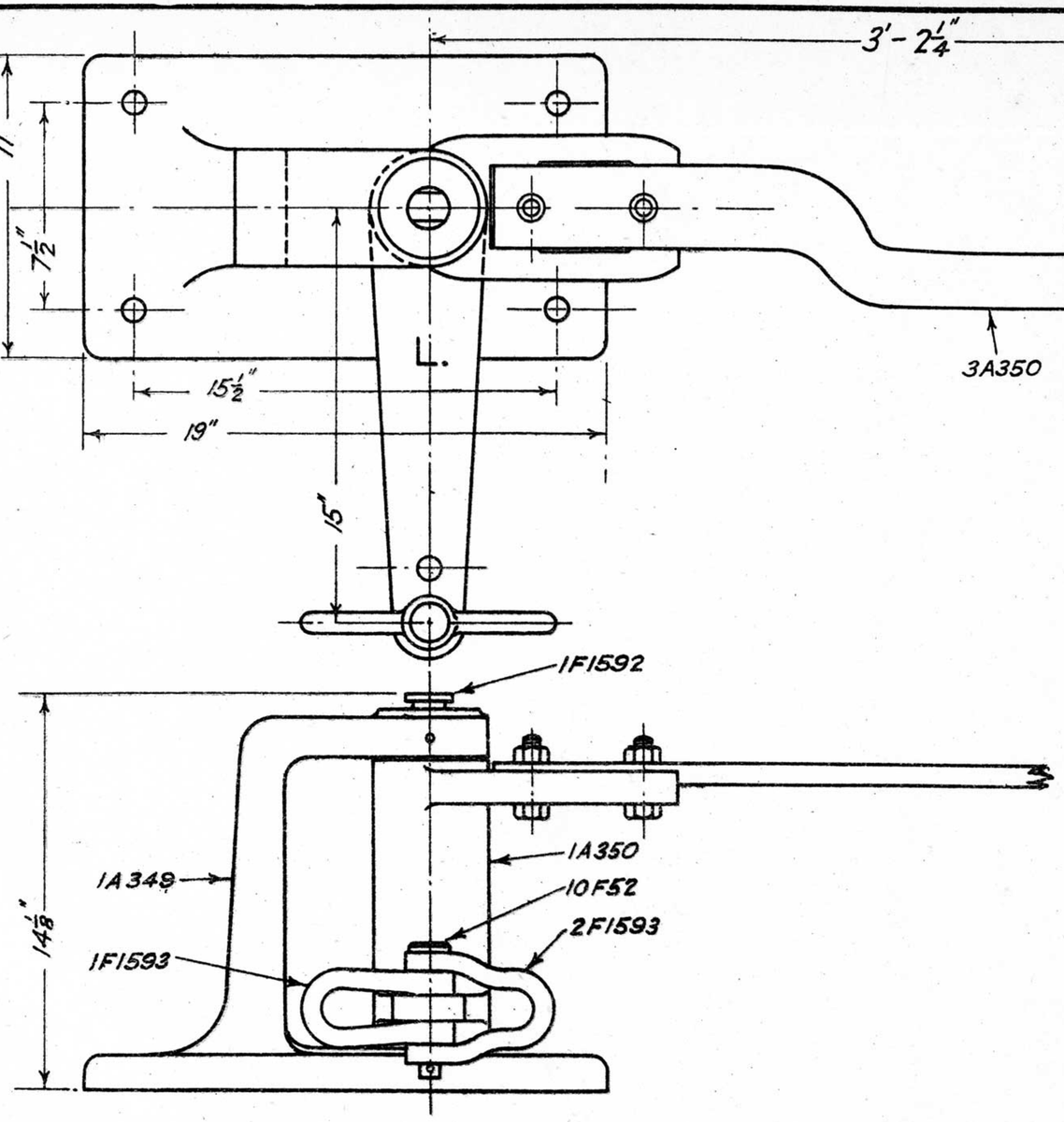

Stores
Section _____
Item № _____

№	Name	Material	Quantity	
			1F1591	2F1591
1A349	Crank Stand	C.I.	1	1
1A350	Crank L.H.	C.I.	1	—
2A350	Crank R.H.	C.I.	—	1
3A350	Arm	W.I.	1	1
1F1592	Pin	M.S.	1	1
1A52	Clip	C.I.	1	1
1F1593	Shackle	W.I.	1	1
2F1593	Shackle	W.I.	1	1
10F52	Pin 4½" long	W.I.	1	1
Stock	Bolts ⅝" Whit x 2¼" long	M.S.	2	2
"	Split Pin ⅜" dia. x 6" long	M.S.	1	1
"	Split Pin ¼" dia. x 2" long	M.S.	1	1

Lift Crank. R.H complete
Lift Crank. L.H. complete (as shown)

2F1591
1F1591

16-8-23

L.248/23

V.R. COTTEW GATE GEAR
LIFT CRANK
ASSEMBLY
Scale 2" = 1ft. 16-8-23

Chief Engr of Sigs & Tels.

Drawn by S.C.O.

Traced by S.C.O.

F1591

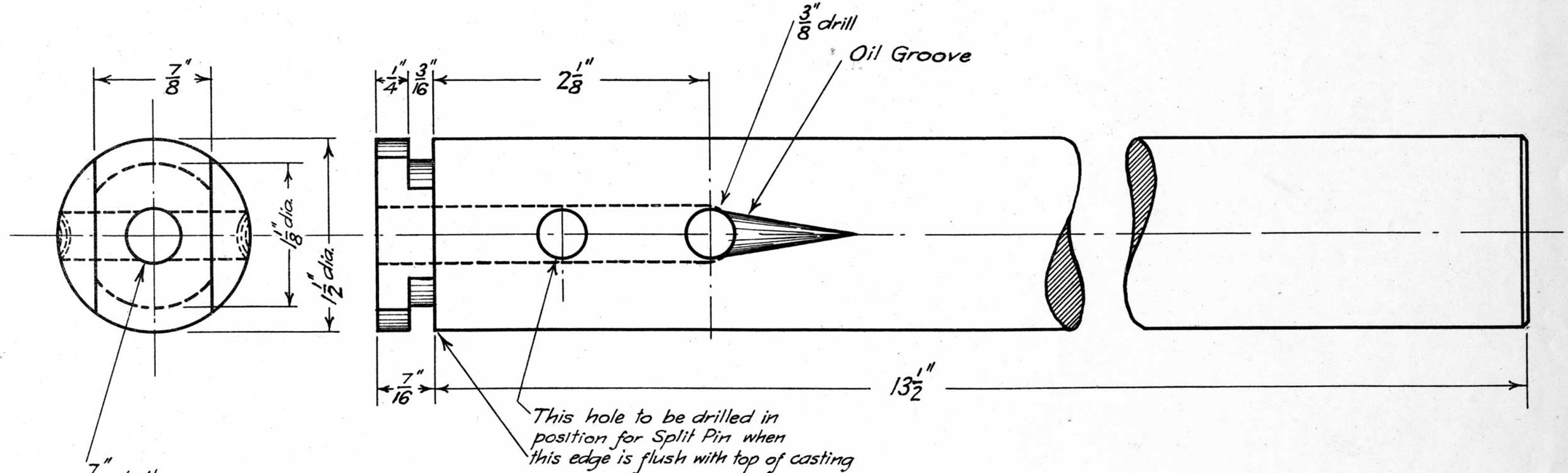

Stores
Section_____
Item Nº_____

1½" Bright Shafting
Pin

16-8-23

IF1592

L.238/23	V.R. COTTEW GATE GEAR LIFT CRANK DETAILS 16-8-23	Chief Engr of Sigs. & Tels.	Drawn by S.C.O.	Traced by S.C.O.	F1592

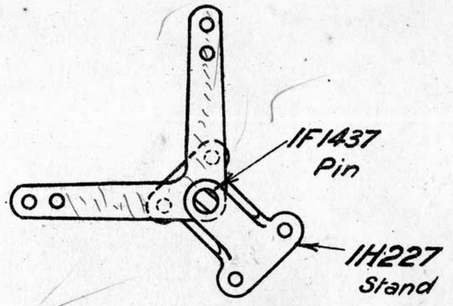

For 10"x12"x16";18" Plain Crank (4F1617) complete order 26F1612.
For 10"x10" Strapped Plain Crank (1F3229) complete order 25F1612.
For 12";10"x22";20" Plain Crank (3F1617) complete order 20F1612
For 15"x15" Strapped Plain Crank (2F1623) complete order 5F1612
" 15"x15" " " (2F1617) " " 4F1612
" 12";10"x20";18" " " (1F1617) " " 3F1612
" 12";10"x15";13" " " (2F1616) " " 2F1612
" 12";10"x12";10" " " (1F1616) " " 1F1612

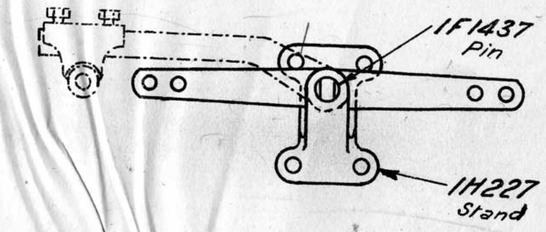

For y x x adj. Cross-Bar Crank (3F1620) complete order 8F1612
" x x y " " " (2F1620) " " 7F1612
" 12";10"x12";10" " " " (1F1620) " " 6F1612

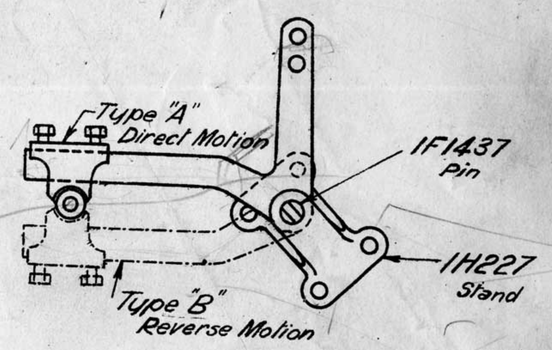

For 12";10"x x Adj. Crank (6F1618) Type "B" complete order 14F1612
" 12";10"x24" " " (5F1618) " " " " 13F1612
" 12";10"x15" " " (4F1618) " " " " 12F1612
" 12";10"x x " " (3F1618) " "A" " " 11F1612
" 12";10"x24" " " (2F1618) " " " " 10F1612
" 12";10"x15" " " (1F1618) " " " " 9F1612

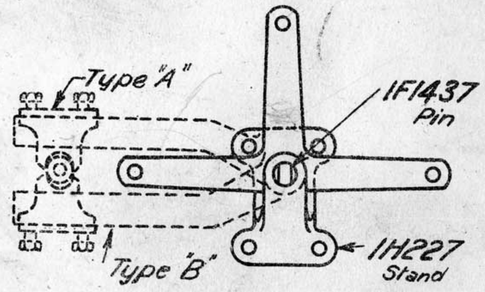

For 12"·10"x12"·10"x x adj. Crank (4F1700) Type "B" Complete Order 24F1612
" " " " "15" " " (3F1700) " " " " 23F1612
" " " " "x" " " (2F1700) " "A" " " 22F1612
" " " " "15" " " (1F1700) " " " 21F1612
For 10"x10"x10" Tee Crank (2F1619) complete order 16F1612
" 12"x12"x12" " " (1F1619) " " 15F1612

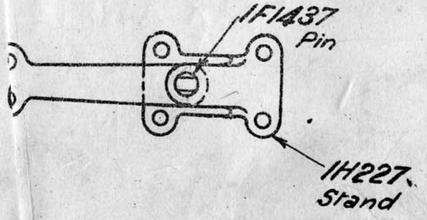

For 15" Relief Crk (2F1621) complete order 18F1612
" 12" " " (1F1621) " " 17F1612

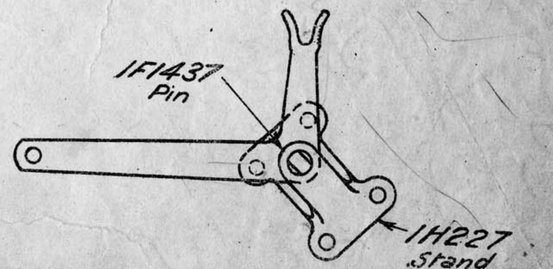

5 16·7·46
Parts 26F1612 added.

4 19·7·39
Parts 25F1612 added.

All parts to be supplied with Bearing Washer 1F3069 — 1 off.

~~For 18"x10½" Selective Lock Bar Crank (2F1622) complete order 19F1612~~

3 14·8·36
Bearing washer 1F3069 added to parts 1F1612 to 24F1612 inclusive

2 20·12·23
Parts 21F1612 to 24F1612 added
W.P. G.W.S.

1 26·10·23
Part No 20F1612 added.
W.P. G.C.

V.R. Crank & Stand complete One-Way Horizontal Ordering List 30-8-23

Chief Eng. of Sigs. & Tels.

Drawn by R.G.C.

Traced by R.G.C.

F1612

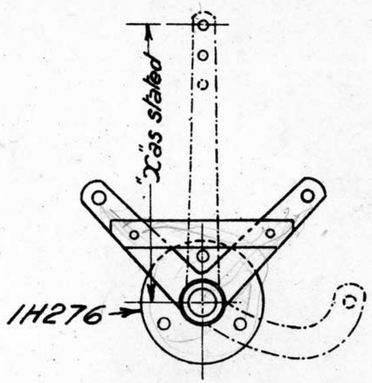

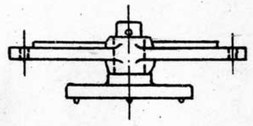

Stores
Section _____
Item № _____

Round Base Crank Stand

Cancelled
5/8/42 NHC

For 10"x X Signal Wire Crank (1F1622) complete order ~~2F1613~~
" 10"x10" Strapped " (1F1623) " " ~~1F1613~~

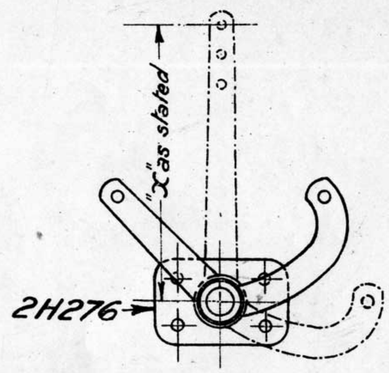

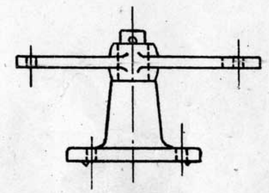

Stores
Section _____
Item № _____

High Accommodating Crank Stand

3F & 5F 1613 to be retained in Custody Stock for replacement where F1622 type is not adaptable
N.U.C.
11.12.44

For 10"x X Signal Wire Crank (1F1622) complete order 4F1613
" 10"x10" Accommodating " (3F1621) " " 3F1613

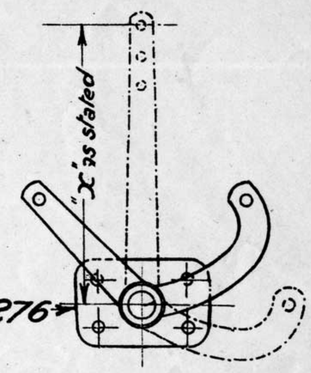

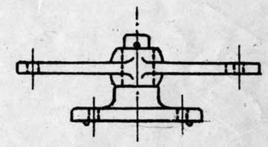

Stores
Section _____
Item № _____

Low Accommodating Crank Stand

For 10"x X Signal Wire Crank (1F1622) complete order 6F1613
" 10"x10" Accommodating " (3F1621) " " 5F1613

L.251/23

Parts 1 & 2 F1613 Cancelled
27-7-42.

V.R Crank & Stand complete
One Way Horizontal Single-Shear
Ordering List
5-9-23

Chief Engr. of Stgs & Tels.

Drawn by R.G.C.

Traced by R.G.C.

F1613

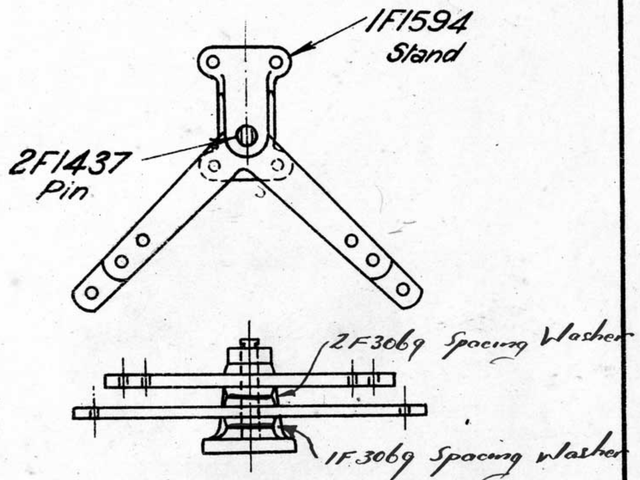

Stores
Section _____
Item No _____

For { 12"x12" Plain Crank 1F1616 / 15"x15" " " 2F1617 } complete order 1F1614

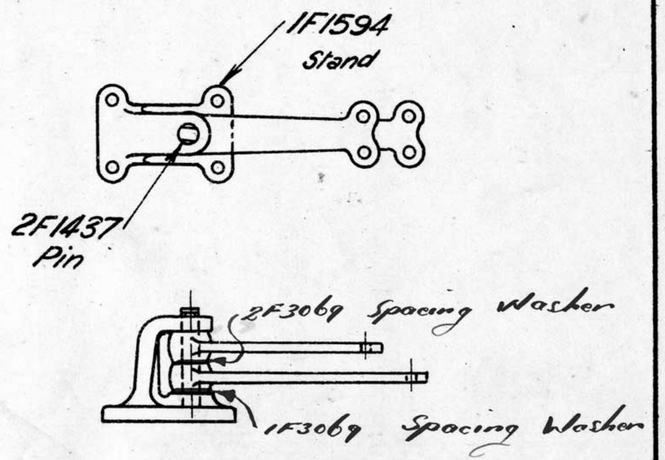

Stores
Section _____
Item No _____

For { 12" Relief Crank 1F1621 / 15" " " 2F1621 } complete order 2F1614

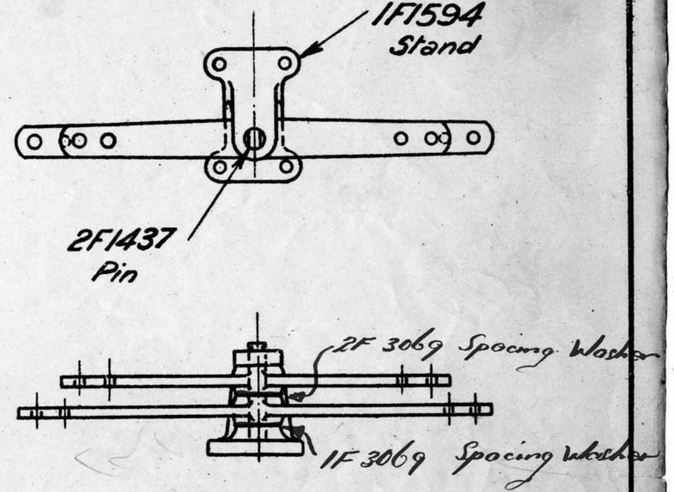

Stores
Section _____
Item No _____

For { 12"x12" Cross-Bar Crank 1F1620 / x=15"x y=15" " " " 2F1620 } complete order 3F1614

L.251/23	14-8-36. washers 1F3069 & 2F3069 added to parts 1, 2, & 3 F 1614	7-11-38 Alteration No. 208	V.R. Crank & Stand complete Two-Way Horizontal Ordering List 30-8-23	Chief Engr of Sigs. & Tels.	Drawn by R.G.C.	Traced by R.G.C.
						F1614

"B" Type

PLAIN

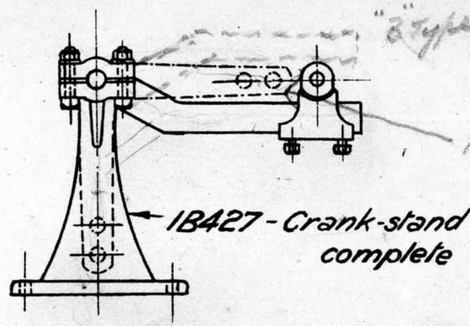

1B427 - Crank-stand complete

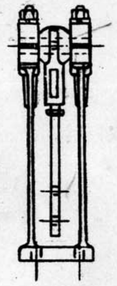

ONE WAY

Stores
Section _____
Item № _____

1"x10"x15" Adj Crank "B" Type Complete order 10F1615

For 12";10"x 15" Adjusting Crank Type "A" (1F1618) complete order 2F1615
" 12";10"x 12";10" Plain " (1F1616) " " 1F1615

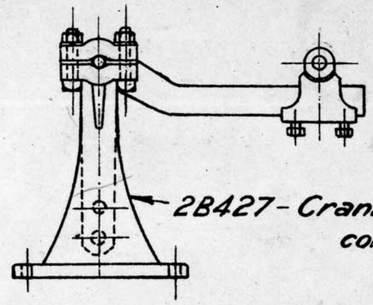

2B427 - Crank-stand complete

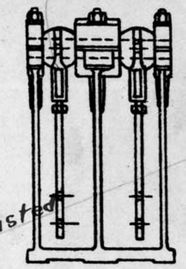

Obsolete when present stocks are exhausted

TWO WAY

Stores
Section _____
Item № _____

For 12";10"x15" Adjusting Crank Type "A" (1F1618) 2off - complete order 3F1615

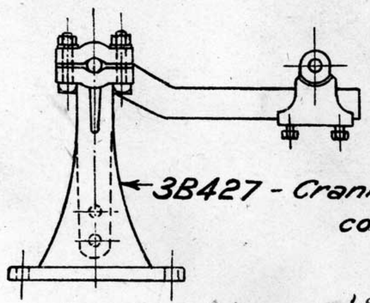

3B427 - Crank-stand complete.

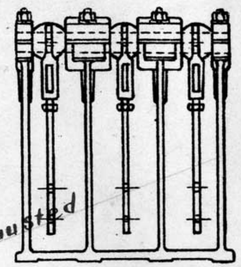

Obsolete when present stocks are exhausted

THREE WAY

Stores
Section _____
Item № _____

For 12";10"x 15" Adjusting Crank Type "A" (1F1618) 3 off complete order 8F1615

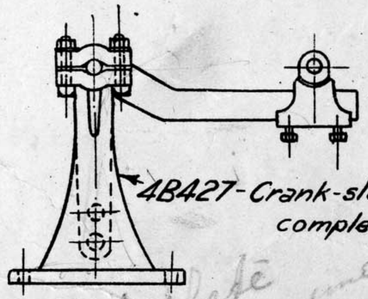

4B427 - Crank-stand complete.

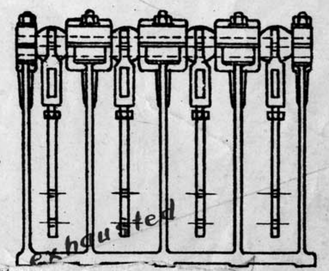

Obsolete when present stocks are exhausted

8·8·39.

FOUR WAY

Stores
Section _____
Item № _____

For 12";10"x 15" Adjusting Crank Type "A" (1F1618) 4 off complete order 9F1615

L.251/23

Redrawn
See Blueprint Dated 27-12-44

V.R Crank & Stand complete
One to Four Way Vertical
Ordering List. 5-9-23

Chief Engr of Sigs. & Tels.	Drawn by	Traced by	
	R.G.C.	R.G.C.	F1615

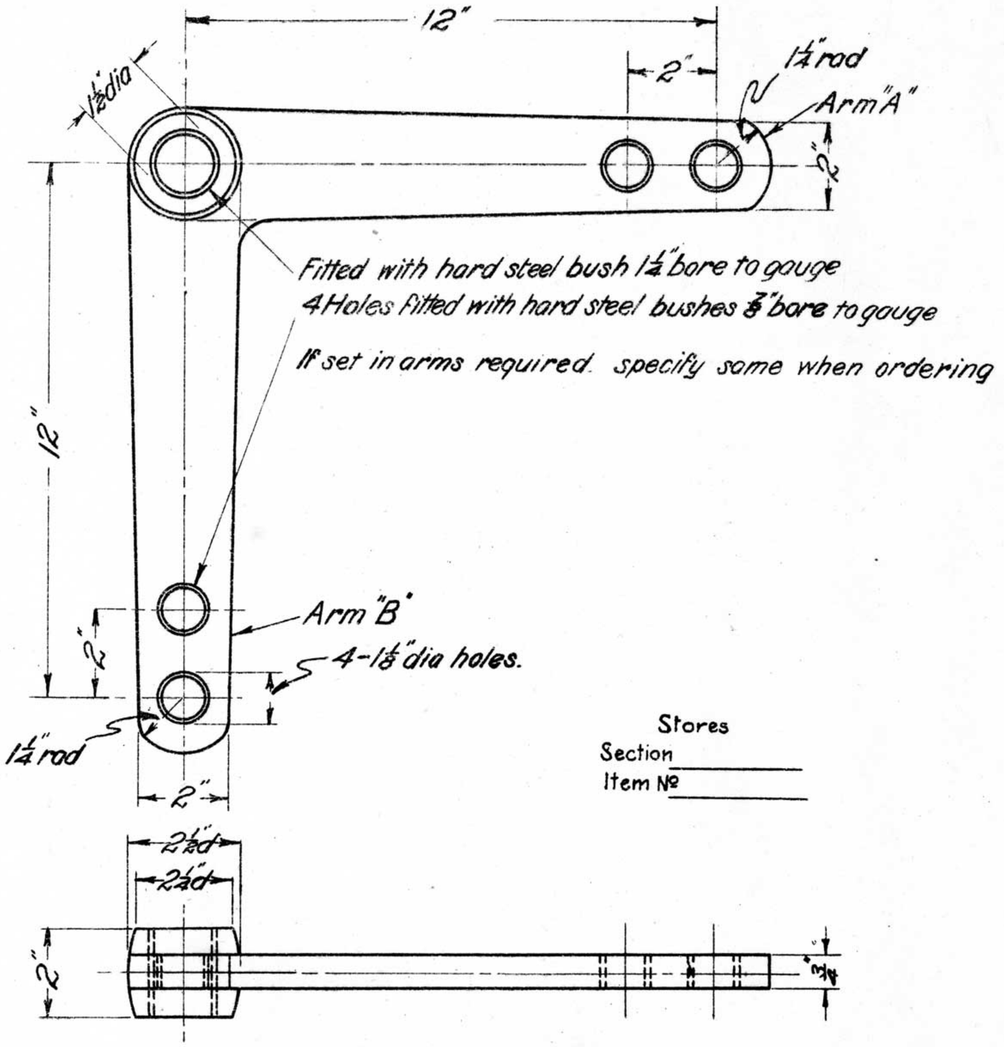

Stores
Section _____
Item № _____

W.I.
CRANK

9·8·23

1F1616

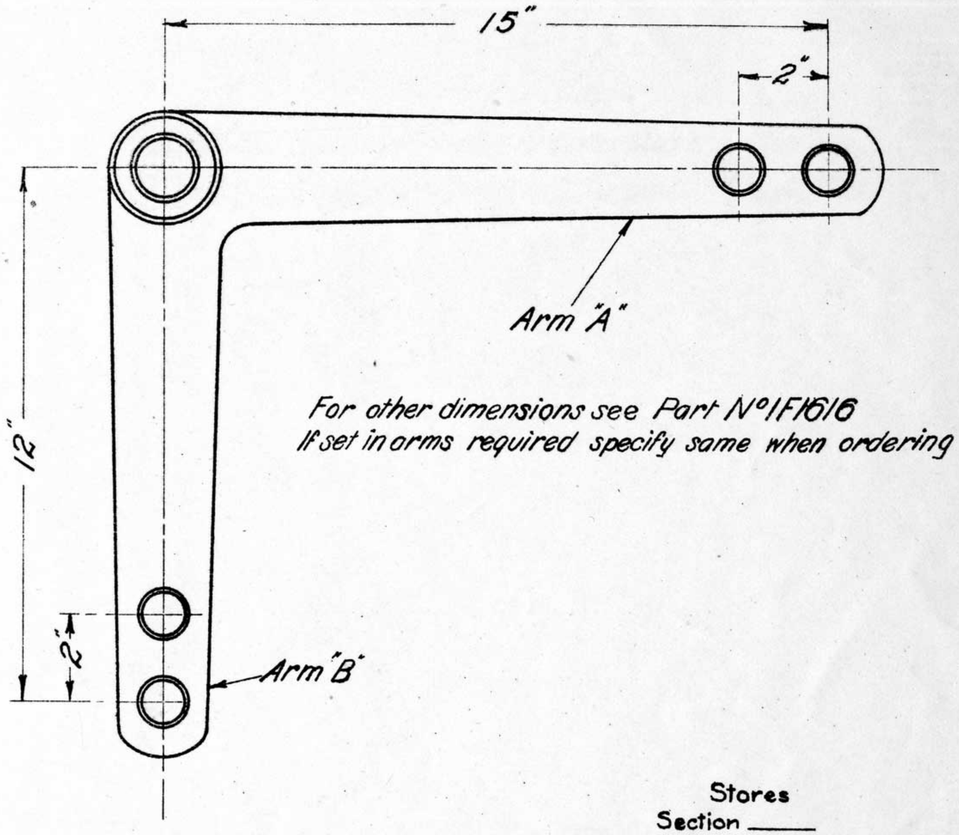

For other dimensions see Part № 1F1616
If set in arms required specify same when ordering

Stores
Section _____
Item № _____

W.I.
CRANK 1

9·8·23

2F1616

L.240/23

V.R.

CRANKS
PLAIN

9·8·23.

Chief Eng'r of Sigs & Telegs	Drawn by	Traced by	
	G.W.S.	G.W.S.	F1616

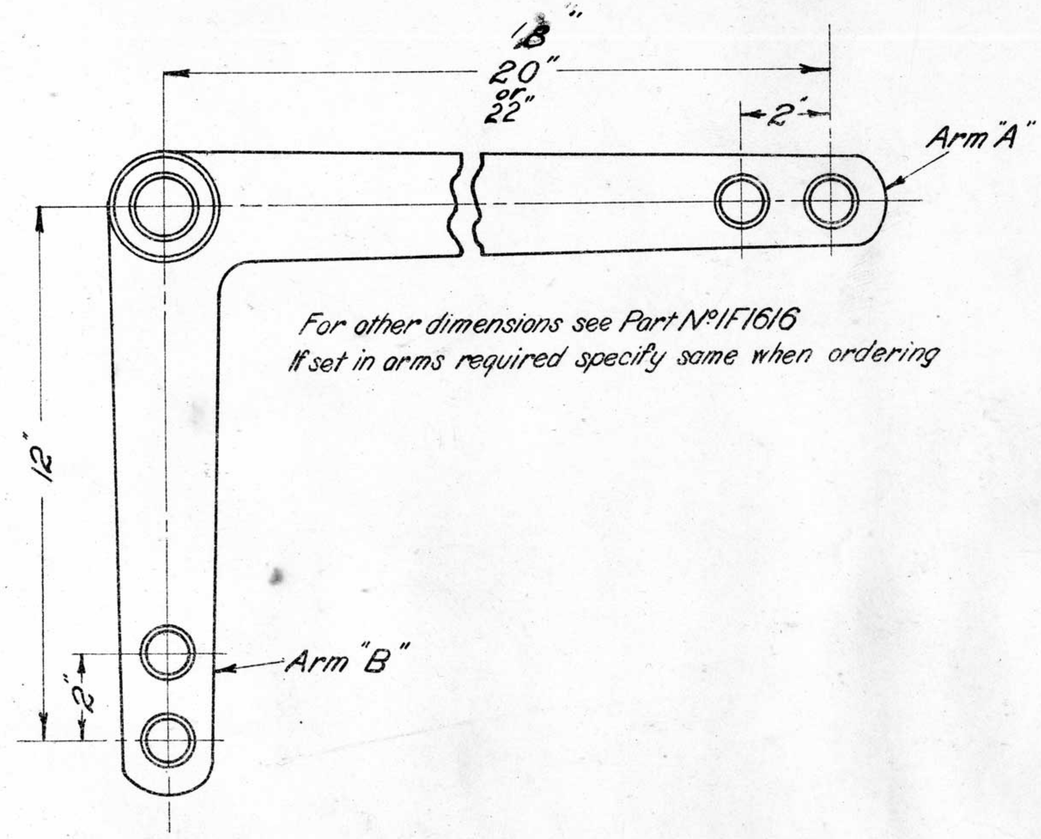

For other dimensions see Part N°1F1616
If set in arms required specify same when ordering

Stores
Section _____
Item № _____

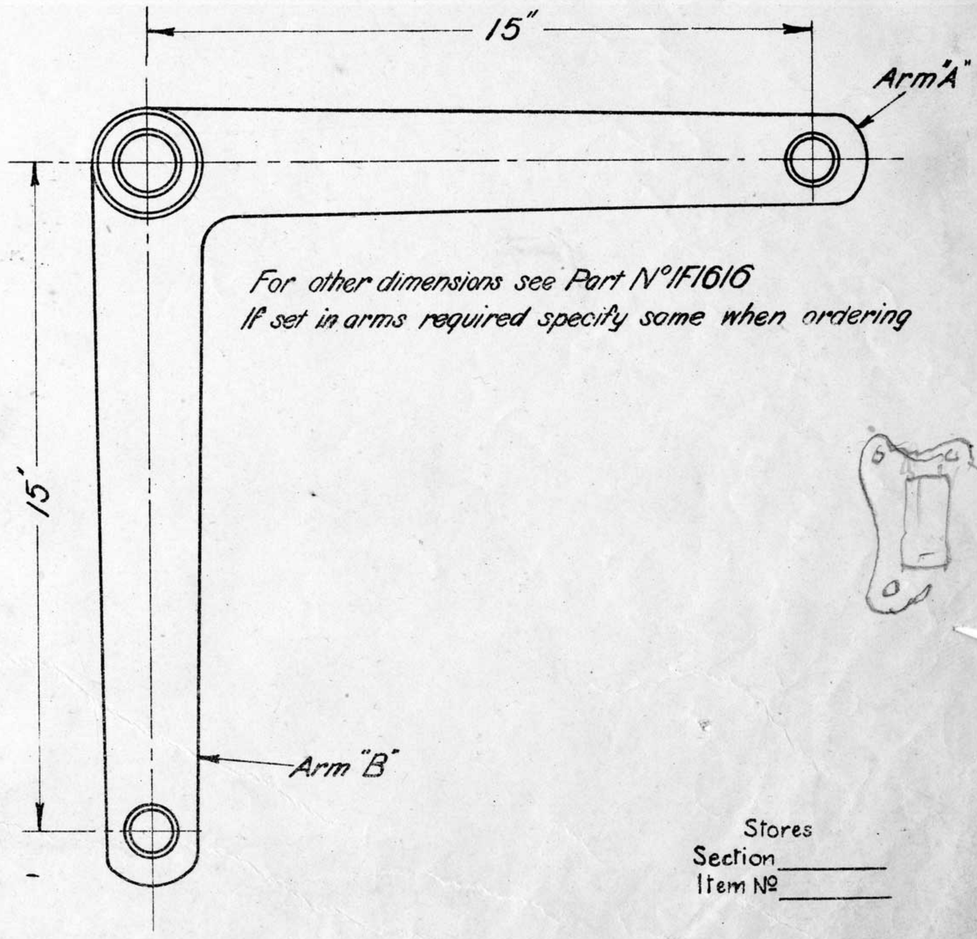

For other dimensions see Part N°1F1616
If set in arms required specify same when ordering

Stores
Section _____
Item № _____

9·8·23	W.I. CRANK	12"×18" 12"×22" 12"×20"	4F1617 3F1617 1F1617	9·8·23	W.I. CRANK				2F1617
		2 16-7-46 Part N°4F1617 added.	1 26-10-23 Part N°3F1617 added	V.R. 9·8·23	CRANKS PLAIN	Chief Eng' of Sigs & Tels	Drawn by G. W. S. W.P.	Traced by G. W. S.	F1617

L.240/23

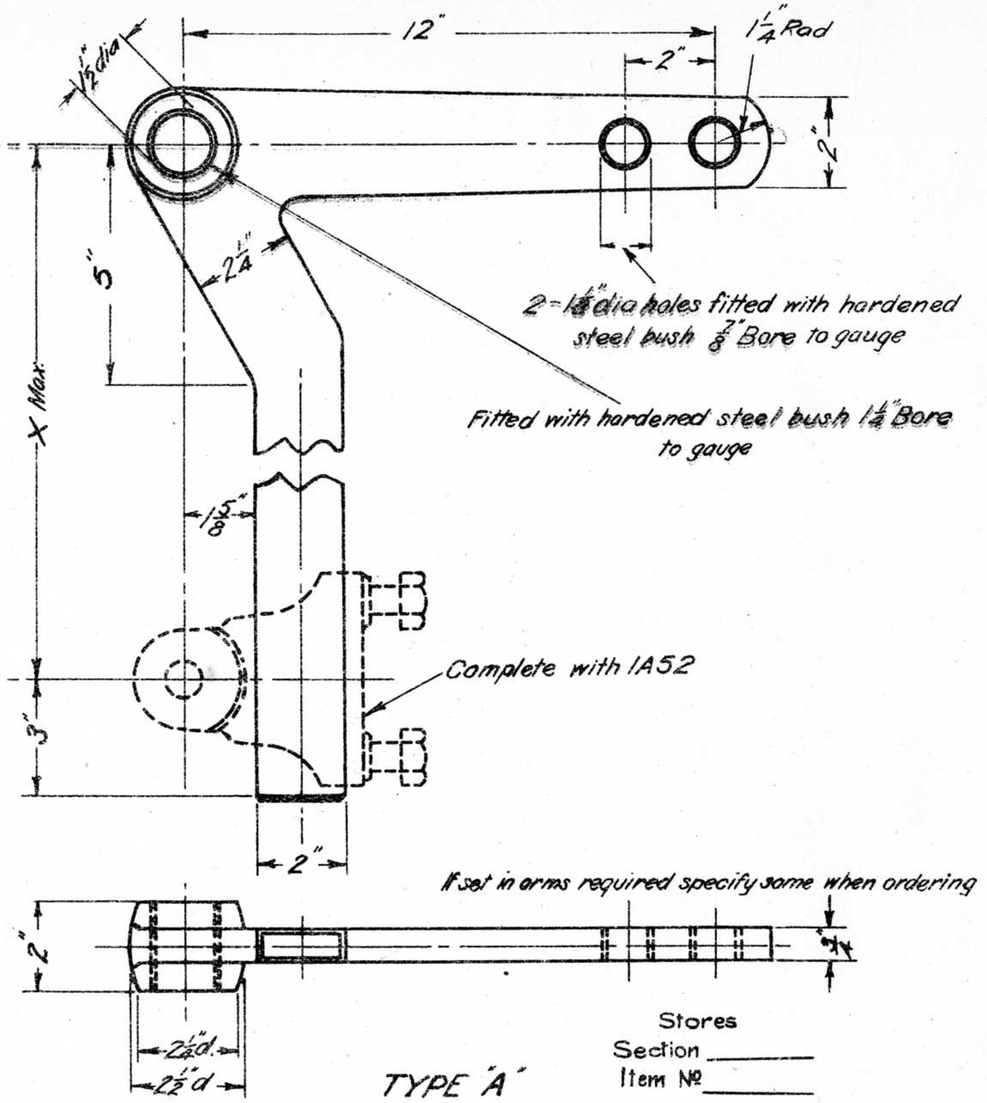

TYPE "A"

Stores Section _____ Item № _____

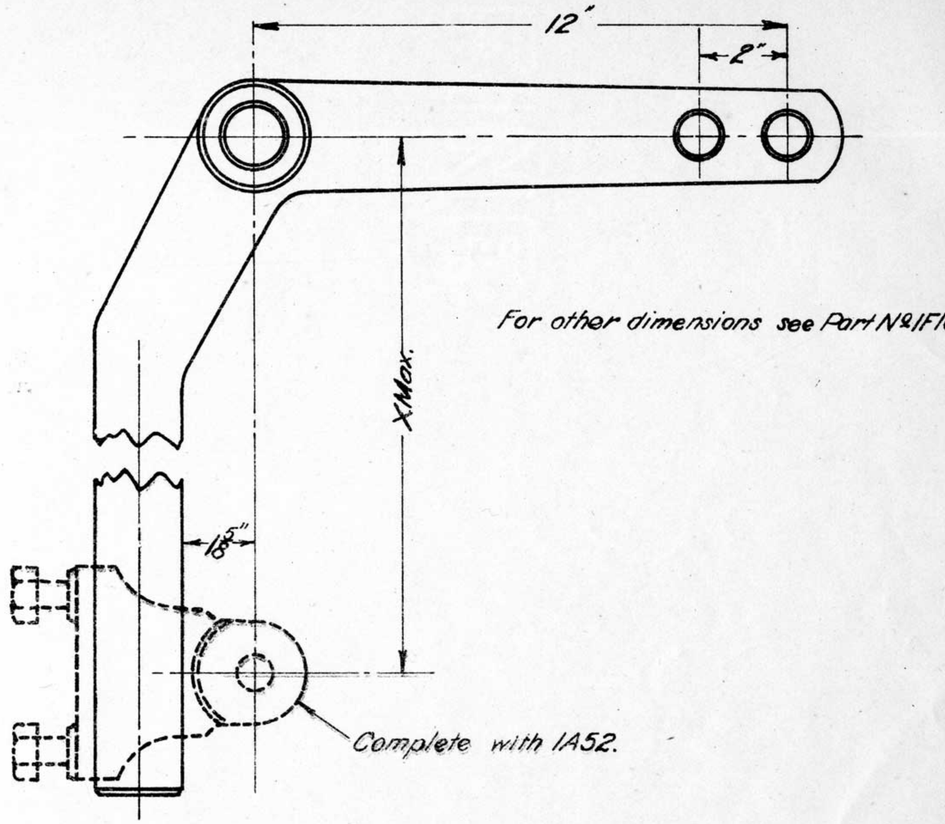

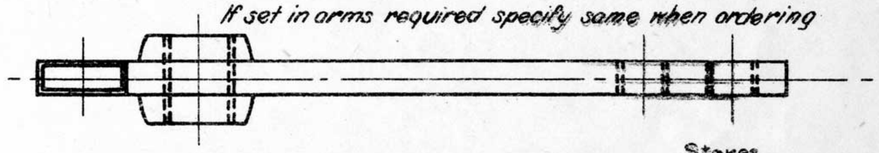

TYPE "B"

Stores Section _____ Item № _____

	X to be stated	3F1618
W.I.	X = 24"	2F1618
21·8·23 CRANK Adjusting	X = 15"	1F1618

	X to be stated	6F1618
W.I.	X = 24"	5F1618
21·8·23 CRANK Adjusting	X = 15"	4F1618

L240/23

V.R.

CRANKS ADJUSTING

21·8·23

Chief Eng'r of Sights Tests.	Drawn by G.W.S.	Traced by G.W.S.	
			F1618

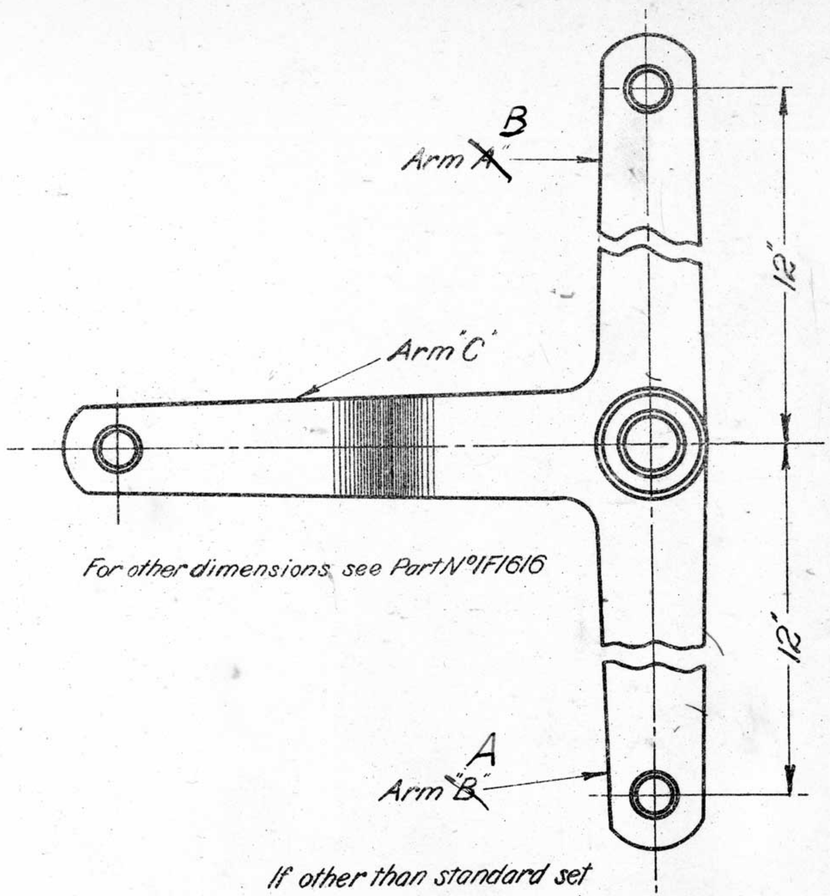

For other dimensions see Part N°1F1616

If other than standard set required specify same when ordering

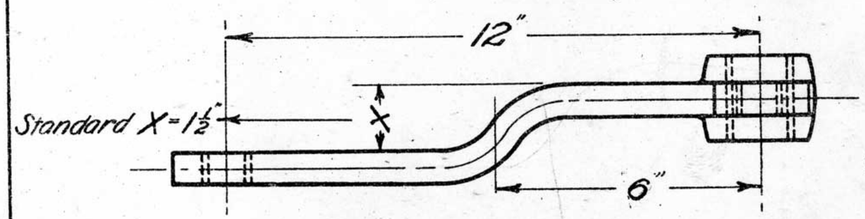

Stores Section_____ Item N°_____

W.I. CRANK Tee

13·8·23 1F1619

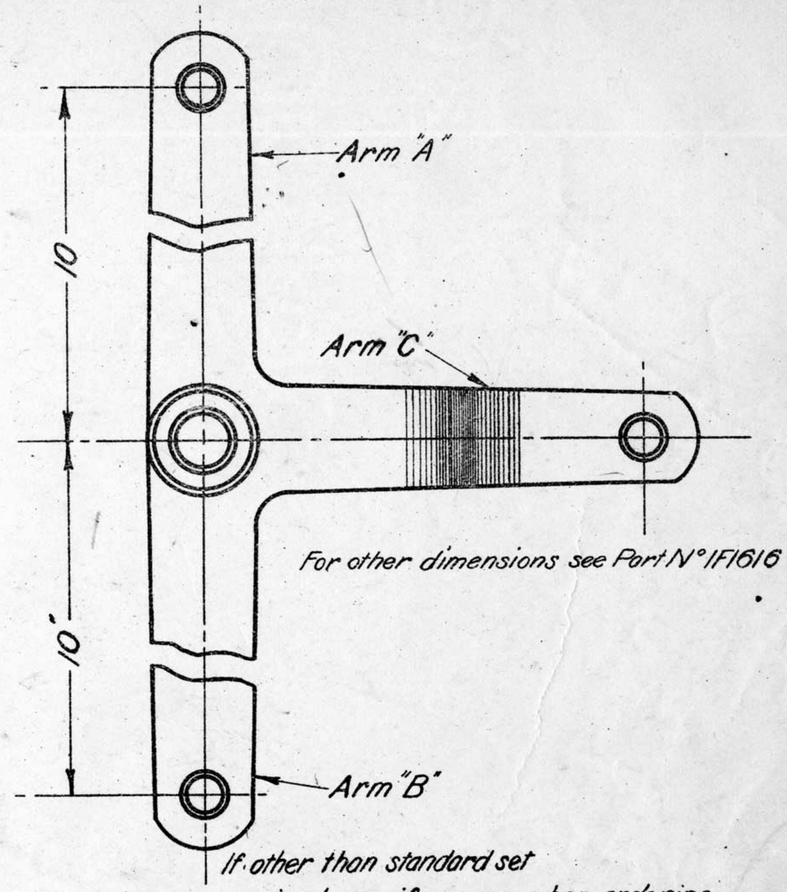

For other dimensions see Part N°1F1616

If other than standard set required specify same when ordering

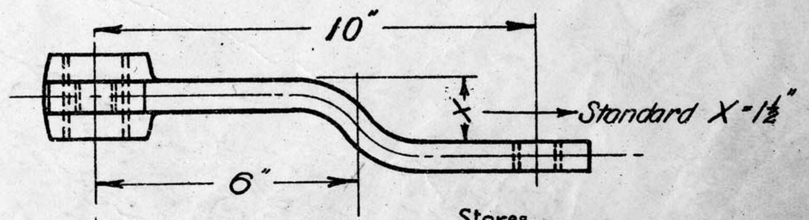

Stores Section_____ Item N°_____

W.I. CRANK Tee

13·8·23 2F1619

L.247/23

V.R. CRANKS TEE 13·8·23

Chief Eng. of Sigs & Tels

Drawn by G.W.S.

Traced by G.W.S.

F1619

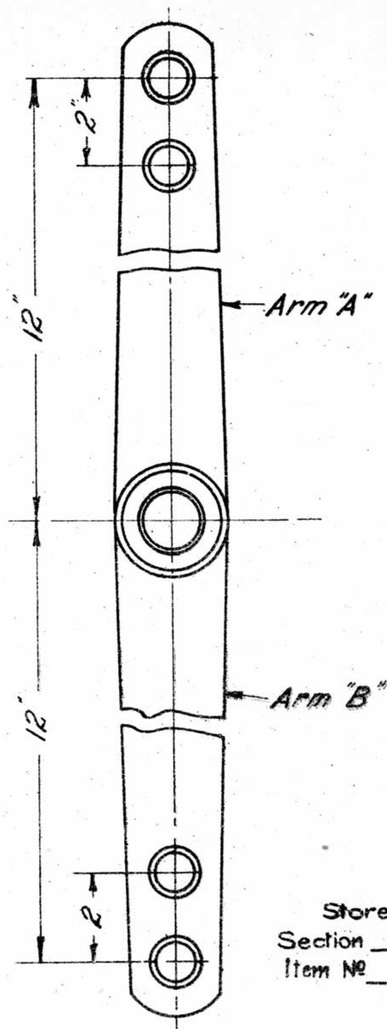

For other dimensions see Part N°1F1616

Stores
Section ____
Item №____

If set in arms required specify same when ordering

W.I.

11·8·23 CRANK (Crossbar) 1F1620

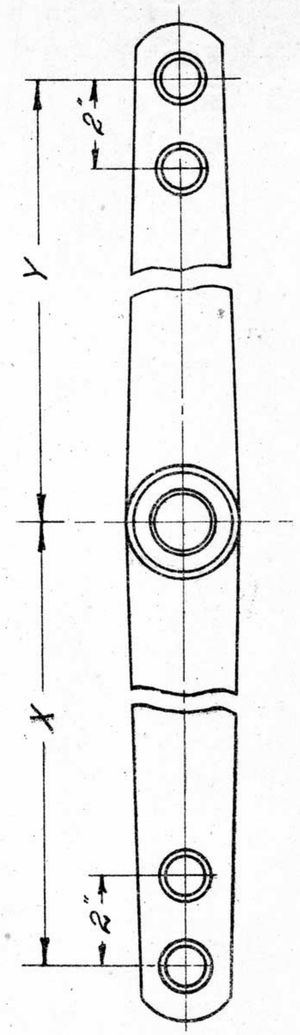

For other dimensions see Part N°1F1616

Stores
Section ____
Item №____

If set in arms required specify same when ordering

W.I.

11·8·23 CRANK (Crossbar) 2F1620

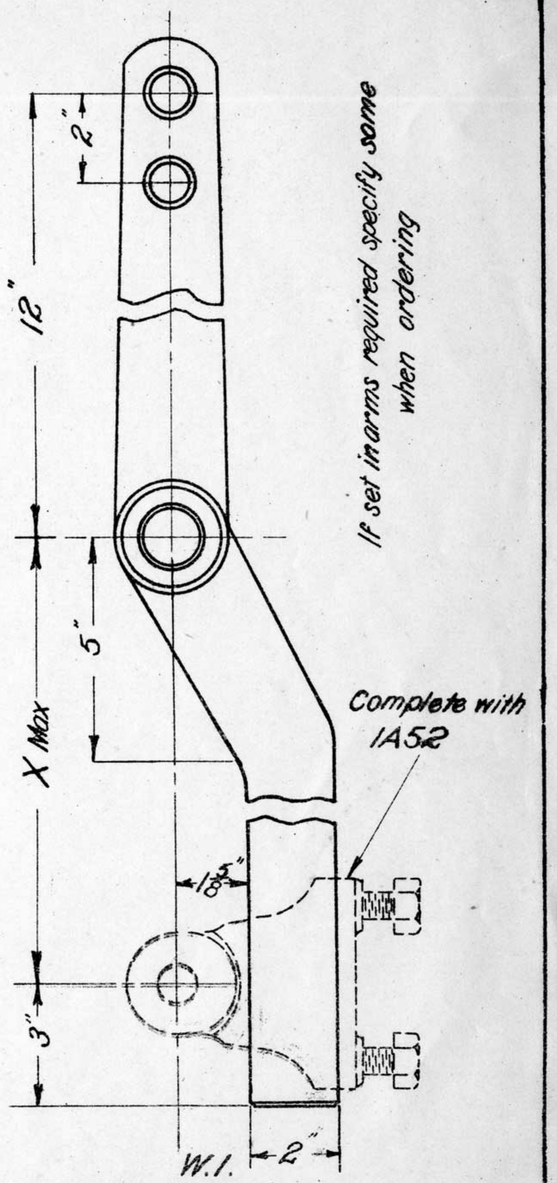

For other dimensions see Part N°1F1618

Stores
Section ____
Item №____

If set in arms required specify same when ordering

W.I.

11·8·23 CRANK (Crossbar) 3F1620

V.R. CRANKS CROSS-BAR 11·8·23

Chief Eng^r of Signals & Teles	Drawn by G.W.S.	Traced by G.W.S.	F1620
	W.R.		

L.247/23

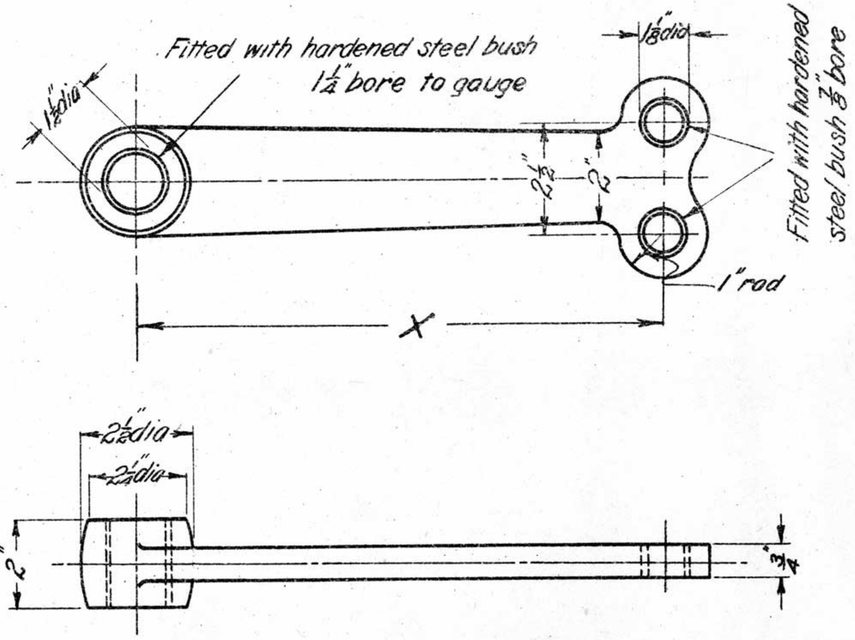

Stores
Section
Item №

W.I.
CRANK (Relief)

X = 15" 2F1621
X = 12" 1F1621

10·8·23

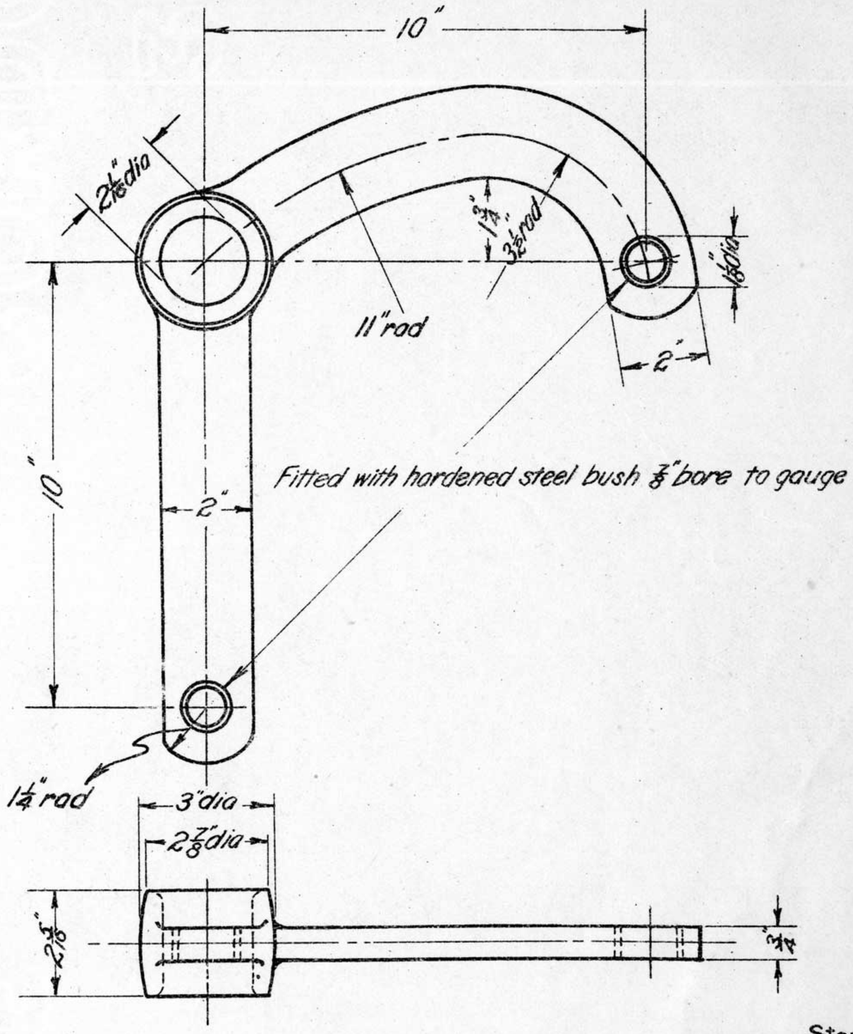

Stores
Section
Item №

W.I.
CRANK (Accommodating)

3F1621

10·8·23

L.247/23

V.R.
CRANKS
ACCOMMODATING & RELIEF
10·8·23

Chief Eng^r of Sigs & Tels.

Drawn by G.W.S.

Traced by G.W.S.

F1621

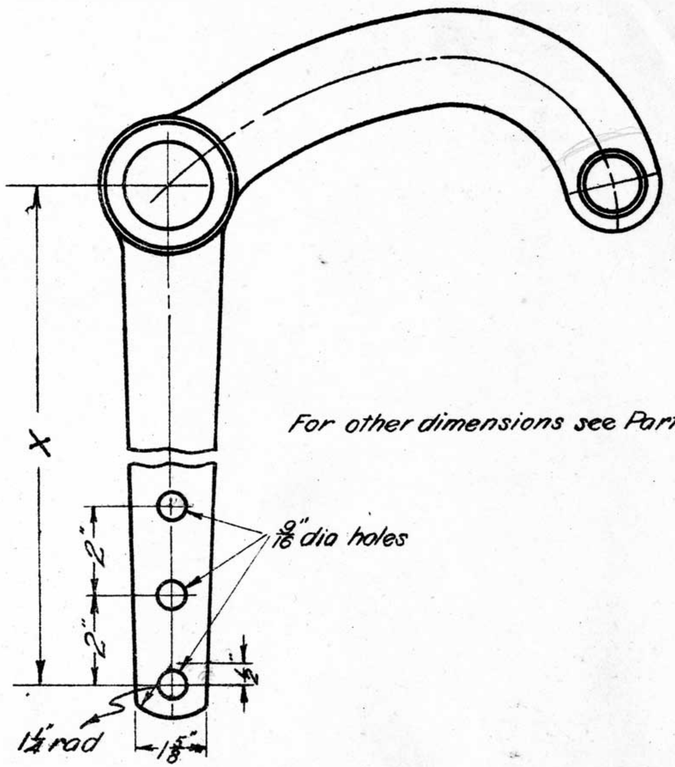

For other dimensions see Part N°3F1621

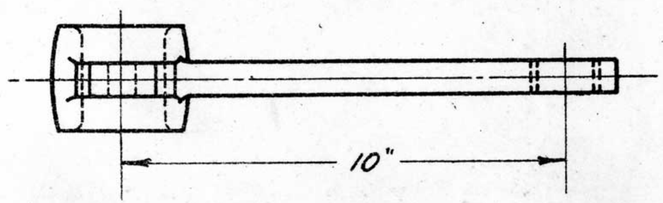

Stores
Section _____
Item № _____

W.I.
21·8·23 CRANK (Signal Wire) 1F1622

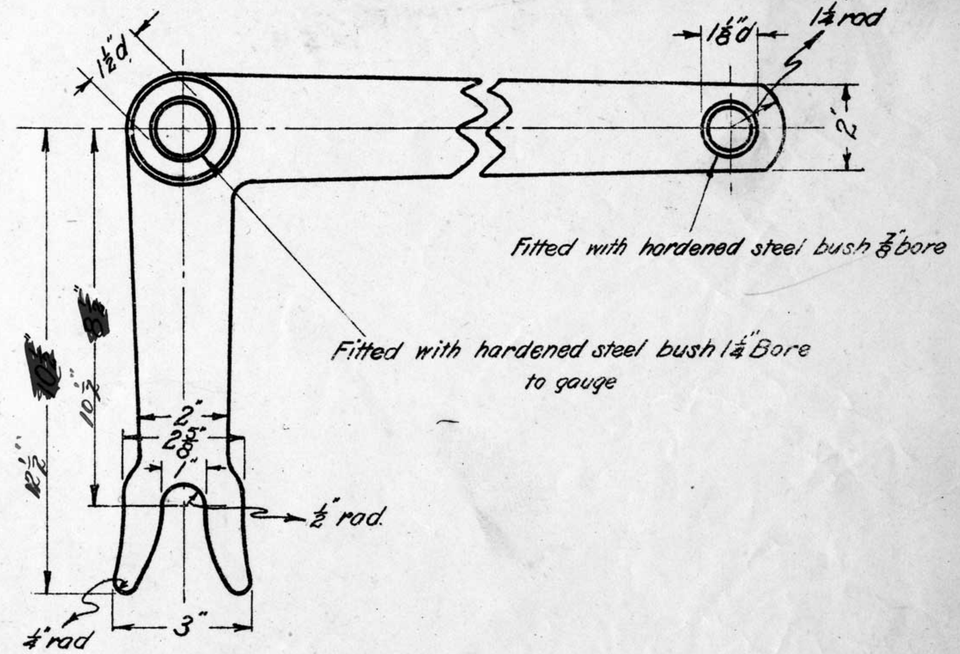

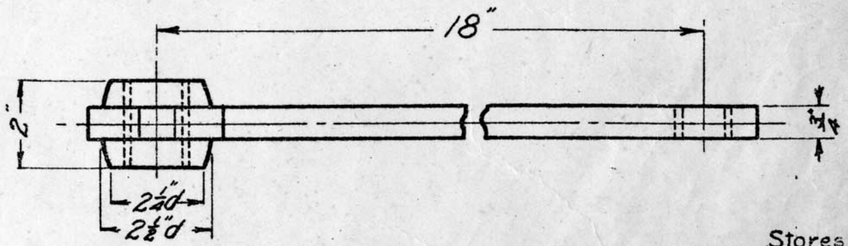

Stores
Section _____
Item № _____

W.I.
21·8·23 CRANK (Selective Lock Bar) 2F1622

V.R.

CRANKS
SIGNAL WIRE & SELECTIVE LOCK BAR
21·8·23

Chief Eng. of Sigs & Tels	Drawn by	Traced by
	G.W.S.	G.W.S
	W.R.	

F1622

L246/23

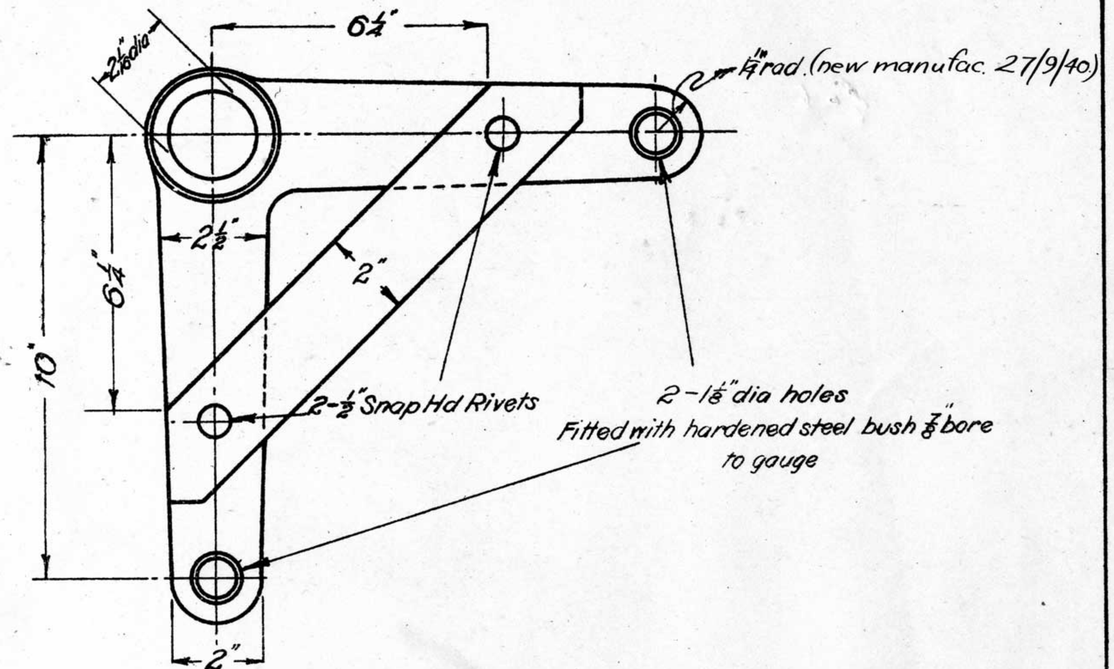

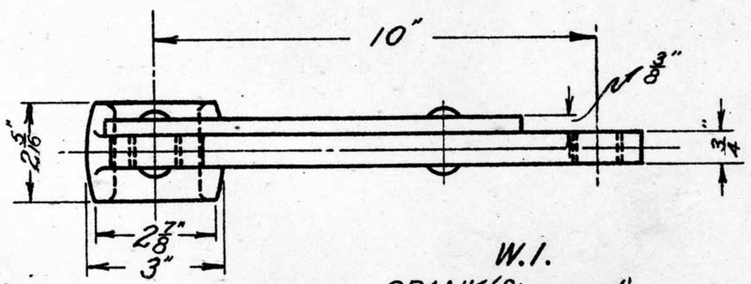

Stores
Section
Item №

Cancelled
5/8/42. N.K.C

W.I.
CRANK (Stropped)

17·8·23

1F1623

27-7-42
Part № 1F1623
Cancelled.

L.248/23

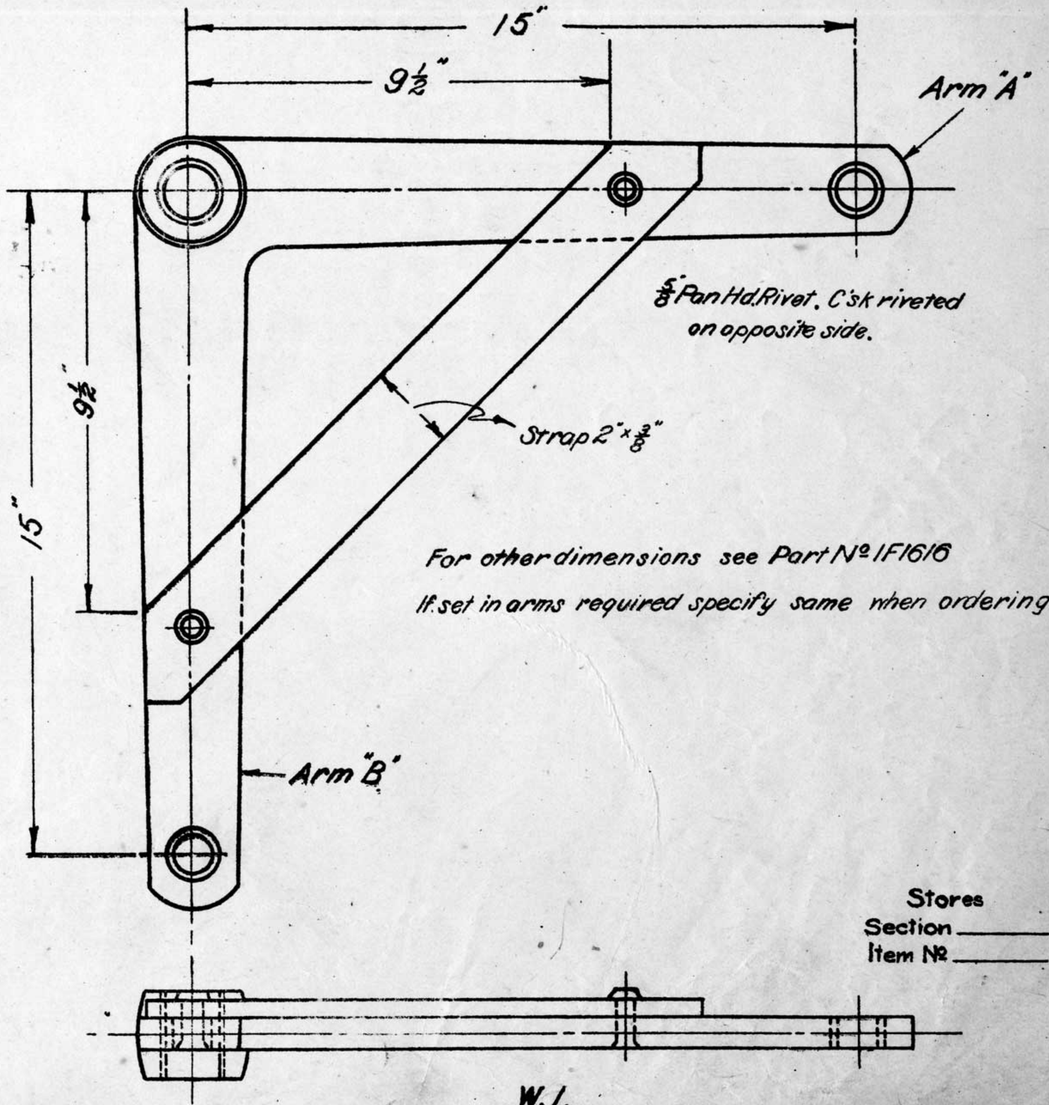

For other dimensions see Part № 1F1616
If set in arms required specify same when ordering

Stores
Section
Item №

W.I.
CRANK (Stropped)

17·8·23

2F1623

V.R.

CRANKS
STRAPPED

17·8·23

Chief Eng.r of Sigs & Tels.

Drawn by G.W.S.

W.R.

Traced by G.W.S.

F1623

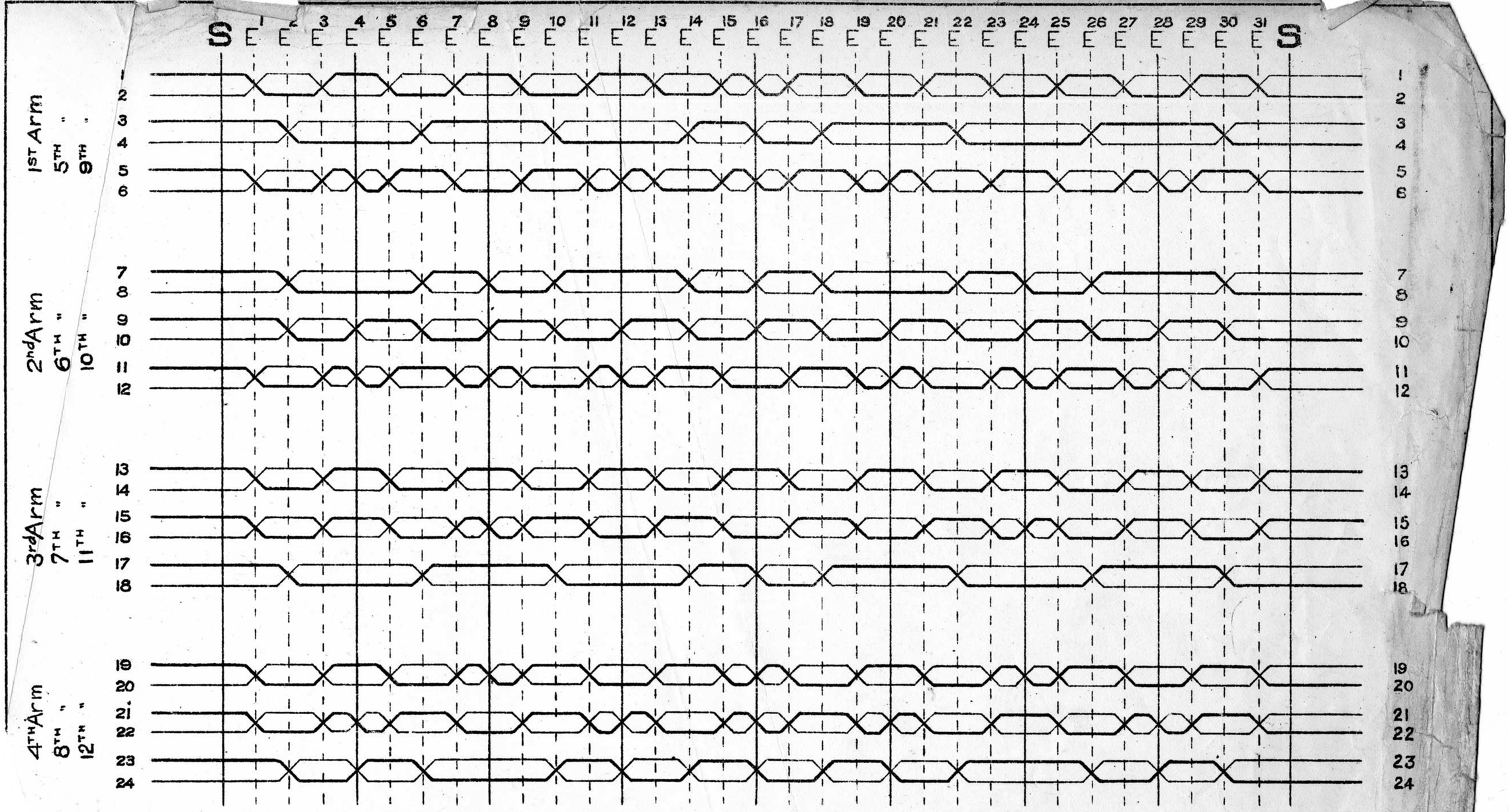

Redrawn and Revised 24-8-38.

— VICTORIAN RAILWAYS —

TELEPHONE TRANSPOSITION SCHEME
NON-PHANTOMED CIRCUITS

Chief Engr Sigs & Tels

Drawn by C.T.C.

Traced by C.T.C.

F163

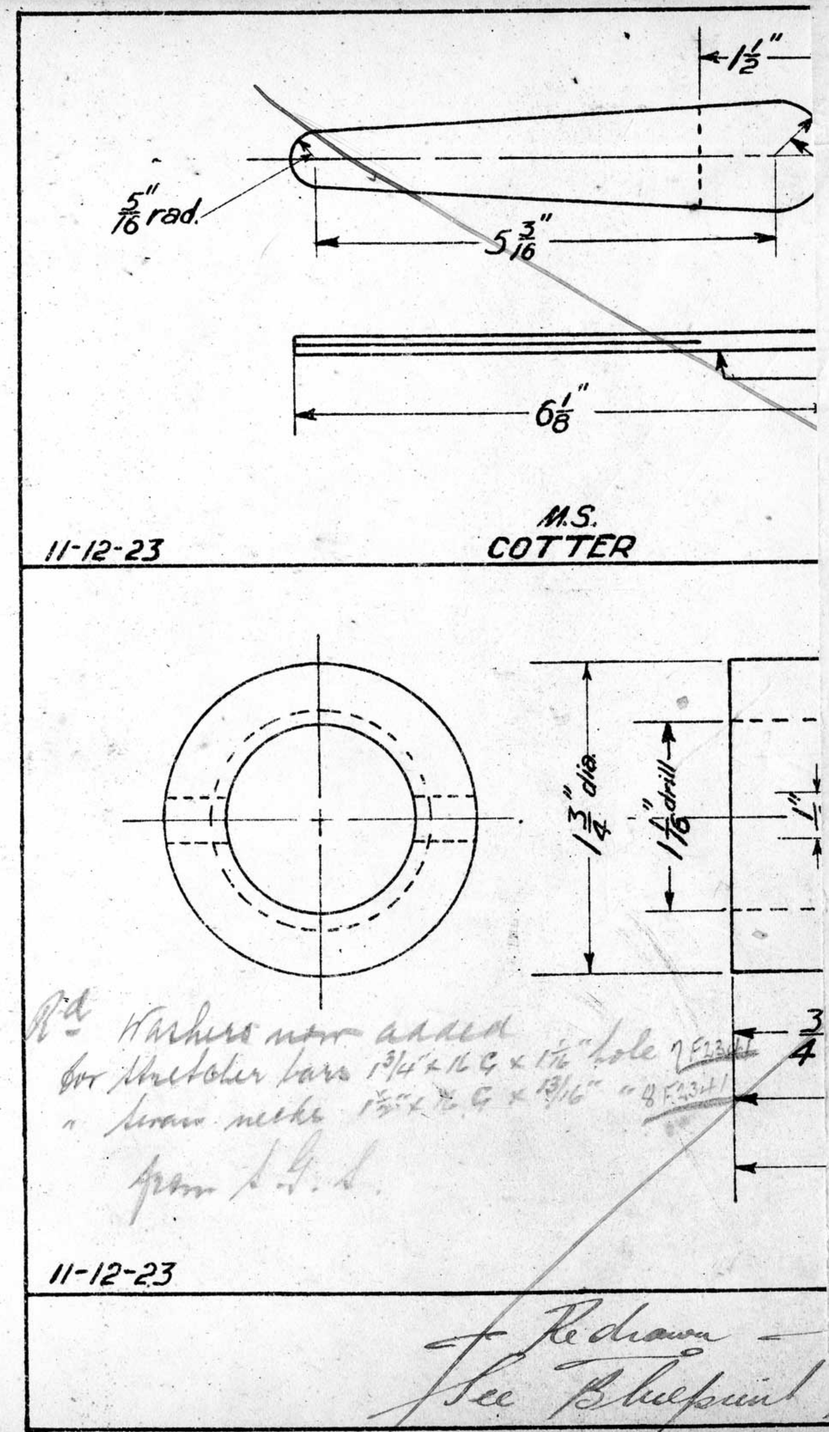

9. 12. 35

Socket Ends & Flat Cotters

The above are to be ordered to Blue Prints F 2159 & F 1690

Blue Print F 2341 is cancelled.

[signature]

Mr Lilley

What is present stock of the item cancelled! & AMC
I will write re amendment of article

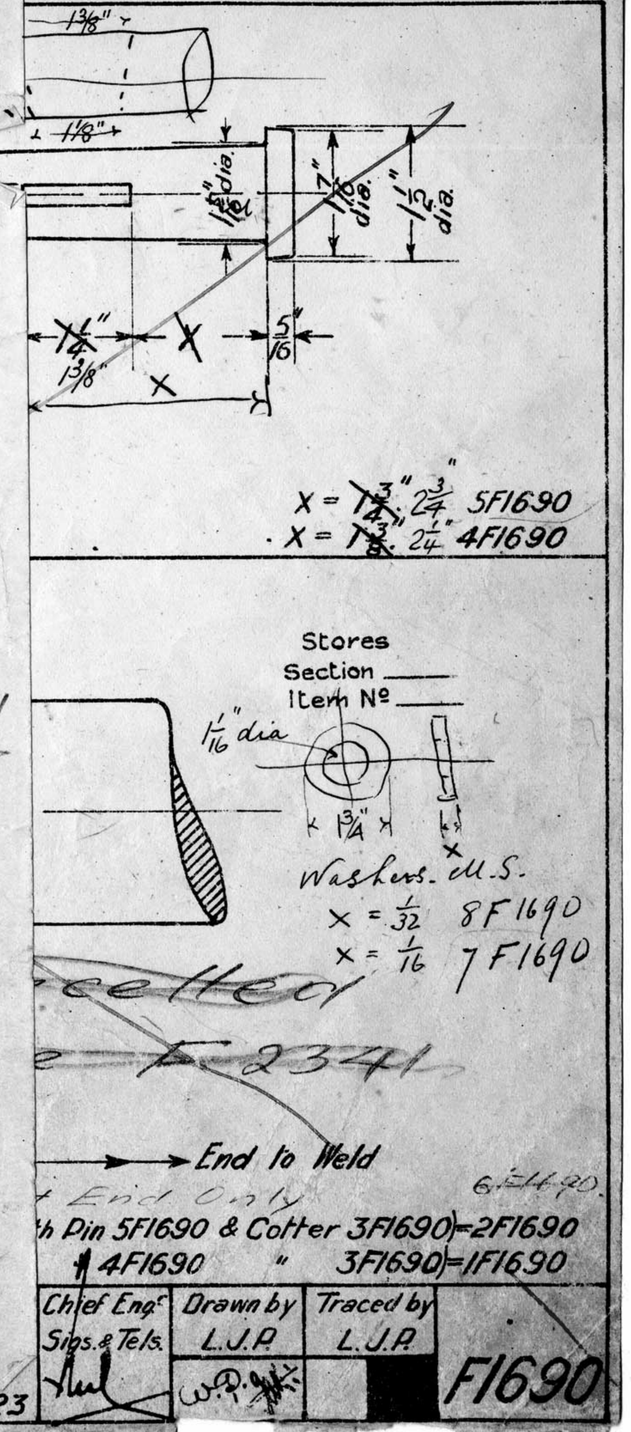

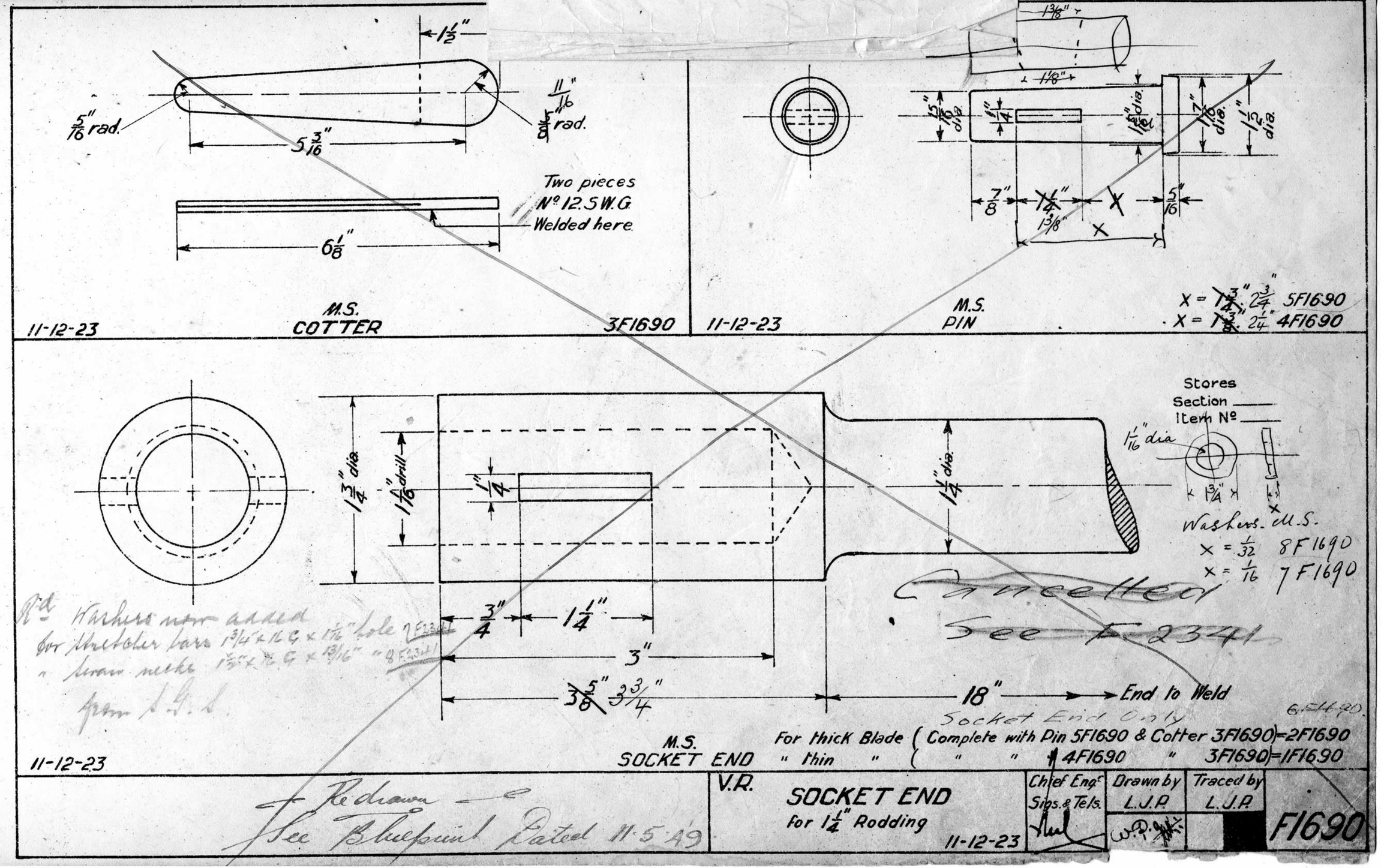

1 1/2"
5/16" rad.
11/16"
5/8" rad.
5 3/16"
Two pieces
No 12 S.W.G.
Welded here.
6 1/8"
11-12-23
M.S.
COTTER
3F1690
1 3/8"
1 1/8"
15/16" dia.
1/4"
1 5/16" dia.
7/16" dia.
1 1/2" dia.
7/8"
1 1/4"
X
5/16"
1 3/8"
X
11-12-23
M.S.
PIN
X = 1 3/4" 2 3/4" 5F1690
X = 1 3/8" 2 1/4" 4F1690
Stores
Section
Item No
1 1/16" dia
1 3/4"
X
Washers M.S.
X = 1/32 8F1690
X = 1/16 7F1690
1 3/4" dia.
1 1/16" drill
1/4"
1 1/4" dia.
3/4"
1 1/4"
3"
3 5/8" 3 3/4"
18"
End to Weld
Cancelled
See F.2341
Socket End Only
6F1690
Rd Washers now added
for stretcher bars 1 3/4" x 16 G x 1 1/16" hole 7F2341
" swan necks 1 1/2" x 16 G x 13/16" " 8F2341
from S.G.S.
11-12-23
M.S.
SOCKET END
For thick Blade (Complete with Pin 5F1690 & Cotter 3F1690)=2F1690
" thin " (" " 4F1690 " 3F1690)=1F1690
Redrawn
See Blueprint Dated 11.5.49
V.R.
SOCKET END
for 1 1/4" Rodding
11-12-23
Chief Engr Sigs. & Tels.
Drawn by L.J.P.
Traced by L.J.P.
F1690

Stores
Section ____
Item No____

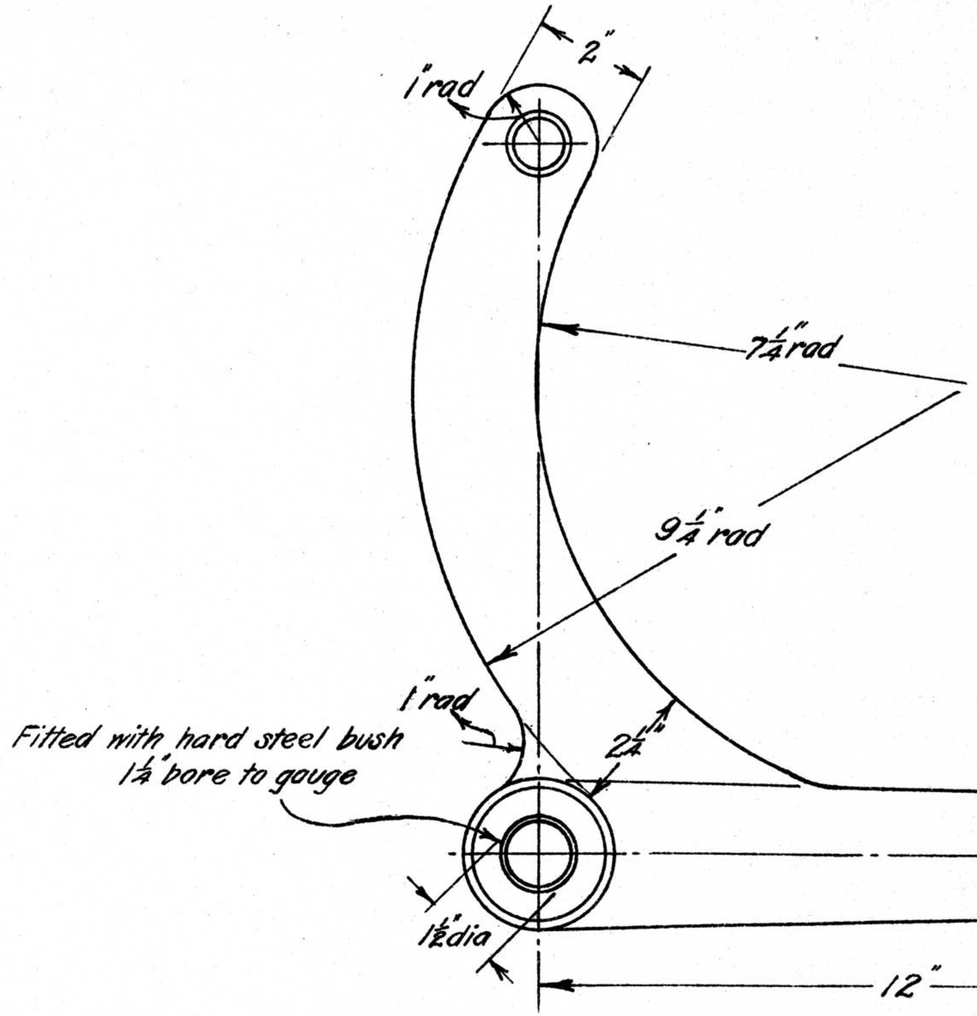

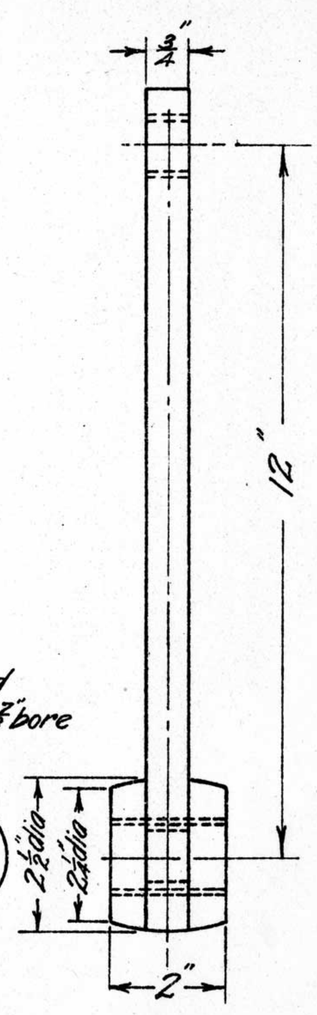

15·12·23

W.I.
CRANK (Accommodating)

1F1695·

V.R.	CRANK ACCOMMODATING 12"×12" 15·12·23	Chief Eng of Sigs & Tels	Drawn by G.W.S.	Traced by G.W.S.	F1695

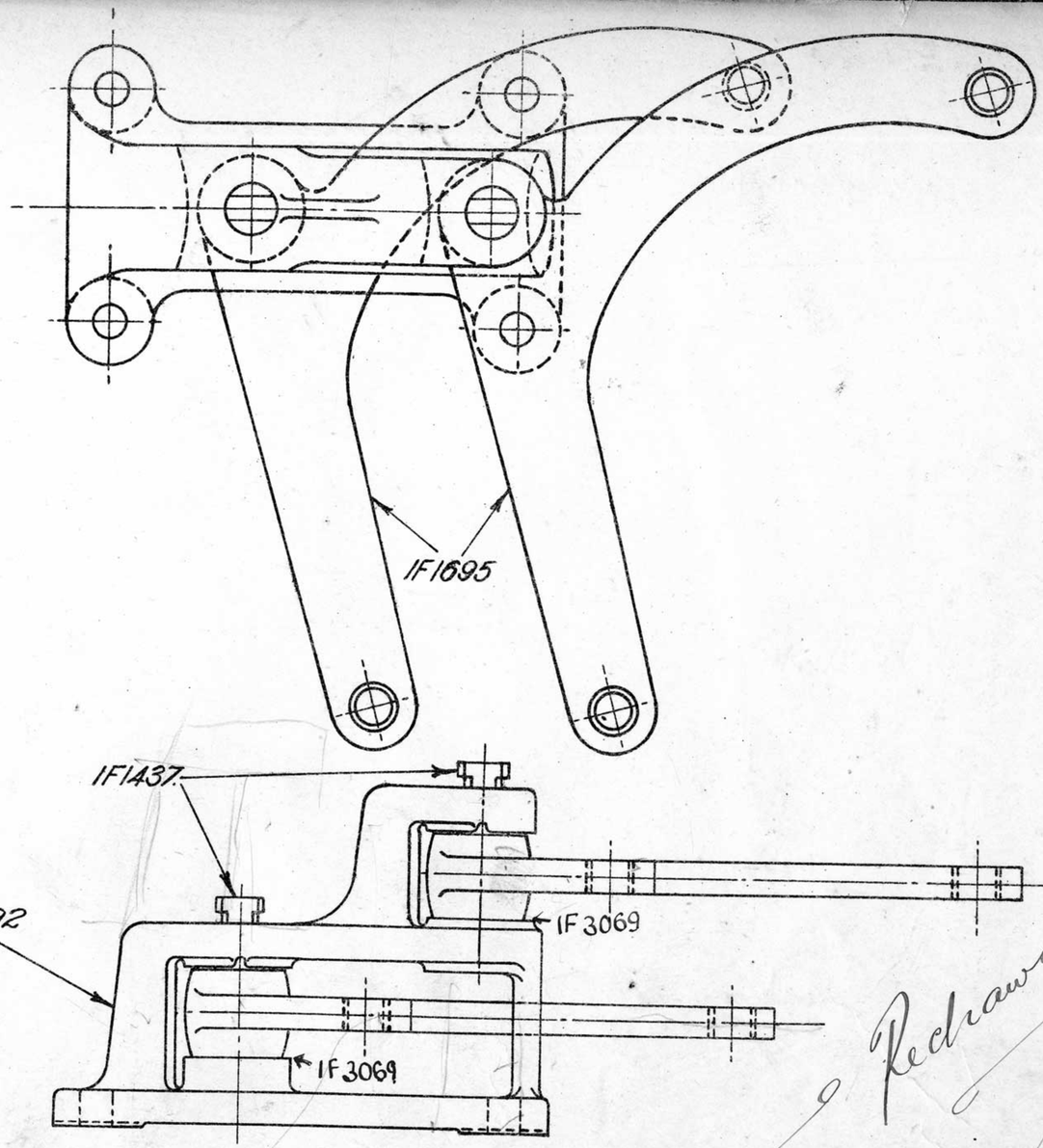

Stores
Section ____
Item No ____

Redrawn
See B keepsink
Dated
9/6/39.

17·12·23

CRANKS & STAND (Complete)	Crankstand (1B492) with 2 Cranks (1F1695) & 2 pins (1F1437)	2F1696
	" (") " 1 " W ") " 1 " (")	1F1696

Redrawn and revised on 9-6-39.

V.R.
CRANKS & STAND Complete
TWO WAY HORIZONTAL TYPE "D"
ORDERING LIST 17·12·23

Chief Eng of Sigs & Tels	Drawn by G.W.S	Traced by G.W.S	F1696

L.96/25

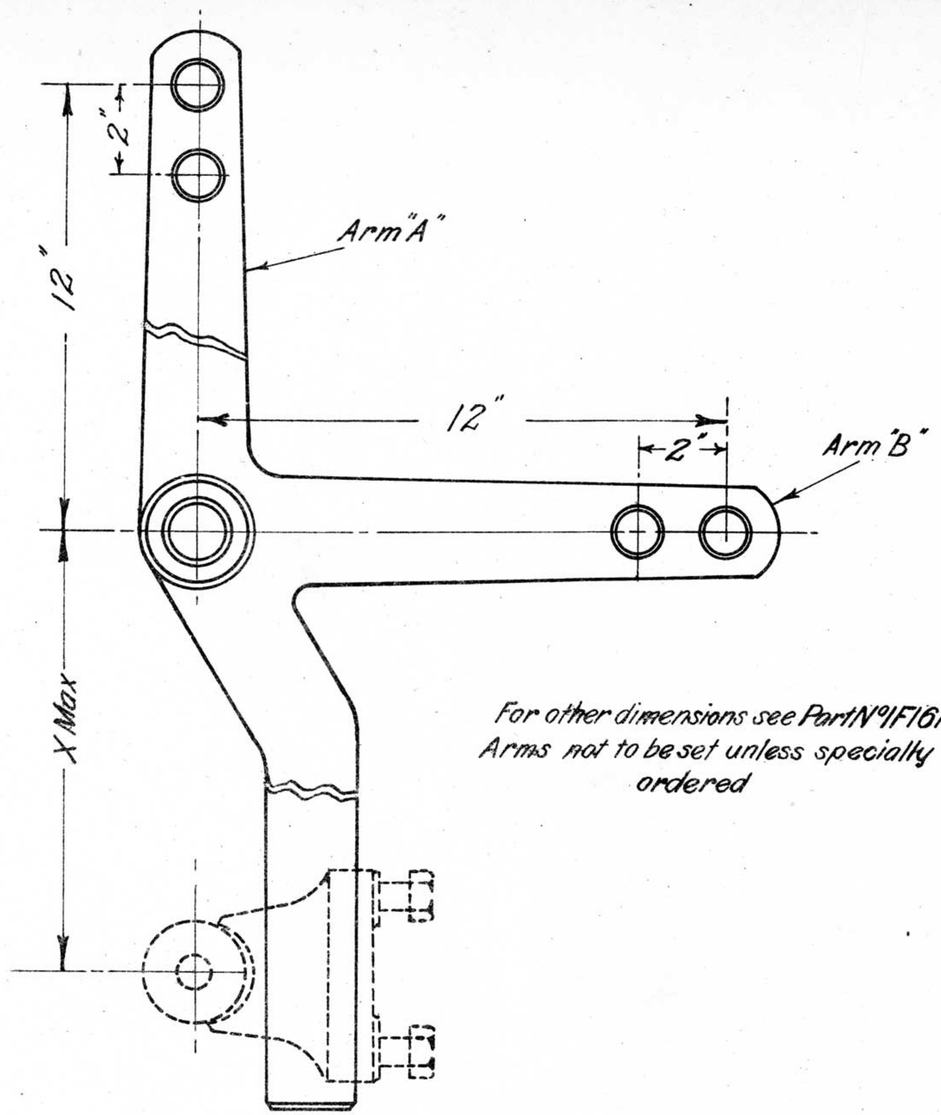

For other dimensions see Part N°1F1618
Arms not to be set unless specially ordered

19·12·23.

TYPE "A" CRANK (Tee Adjusting)

X to be stated 2F1700
X = 15" 1F1700

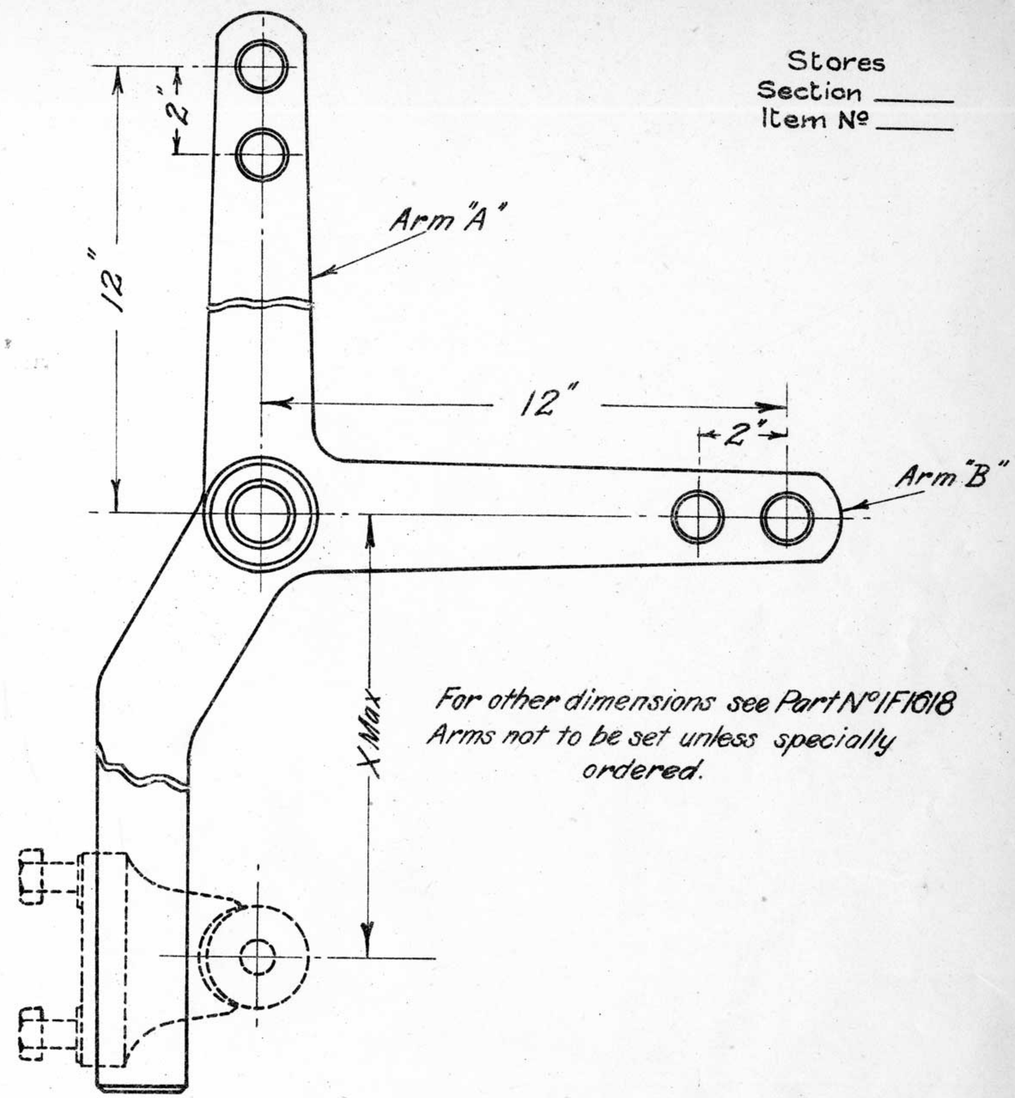

Stores
Section _____
Item N° _____

For other dimensions see Part N°1F1618
Arms not to be set unless specially ordered.

19·12·23.

TYPE "B" CRANK (Tee Adjusting)

X to be stated 4F1700
X = 15" 3F1700

V.R.

CRANKS
TEE – ADJUSTING.

19·12·23.

Chief Eng of Stores Tools	Drawn by G.W.S.	Traced by G.W.S.	F1700

L.96/25

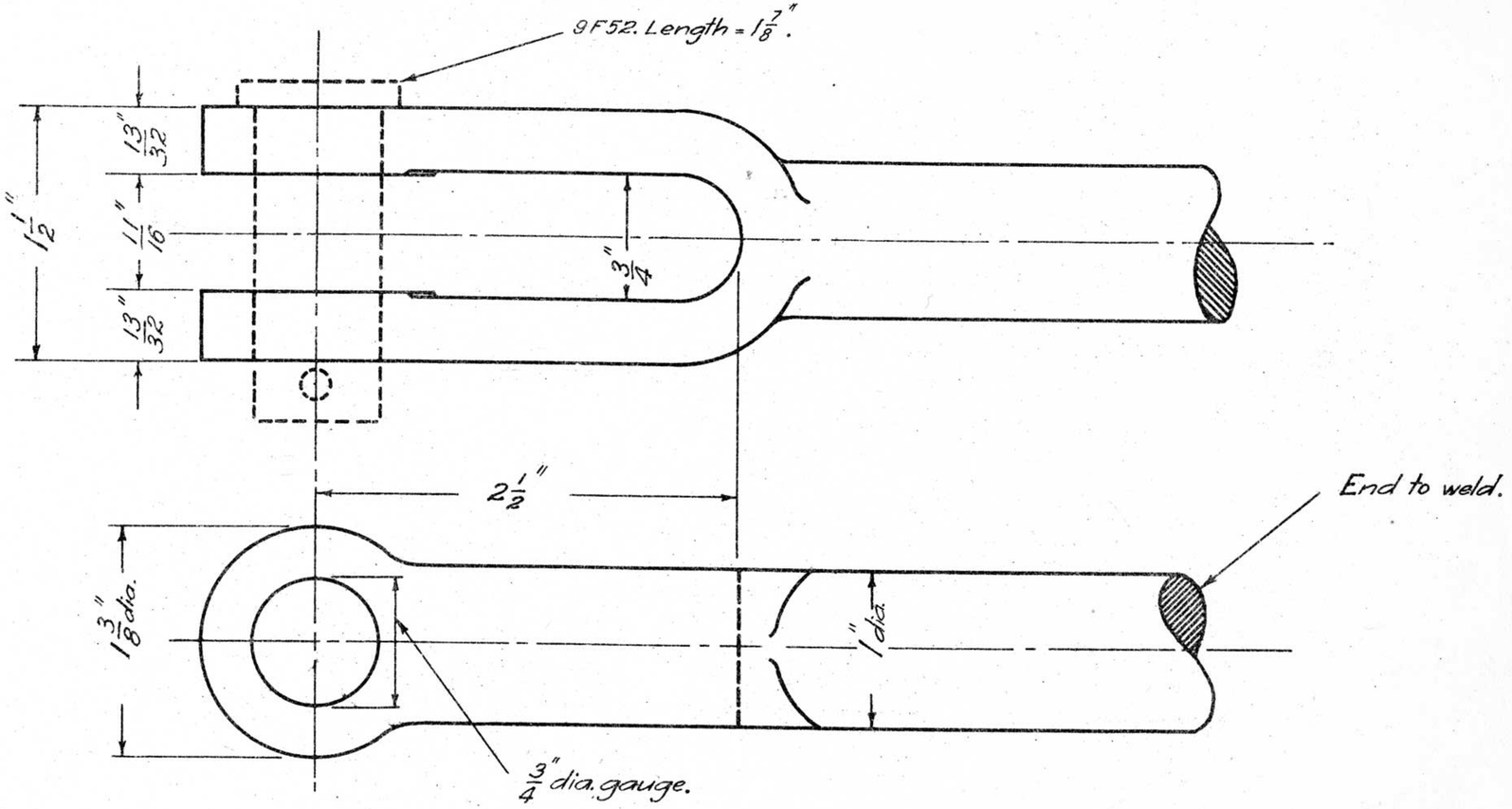

14 - 5 - 24

W. I.
SOLID JAW

IF1792

	V.R. 1" SOLID JAW 14 -5 -24	Chief Eng. of Sigs. & Tels.	Drawn by K.C.H.C.	Traced by K.C.H.C.	F1792

L.112/28

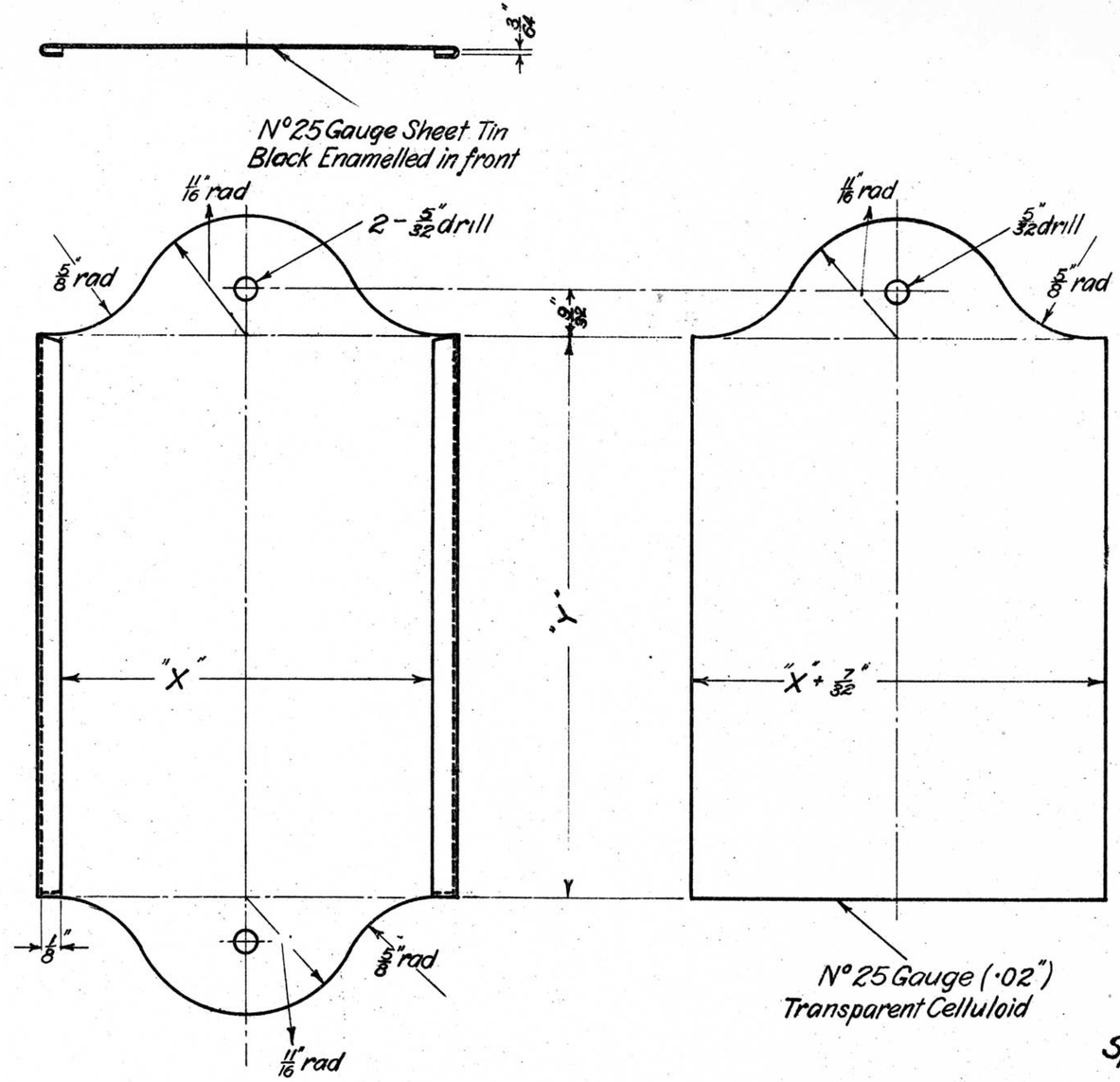

Special	"X" = 2½"	"Y" as ordered	3F1810
Standard	"X" - 2½"	"Y" - 4½"	2F1810
	"X" - 2¼"	"Y" - 3⅜"	1F1810

21·6·24

FRAMES FOR CODE CARDS (Sh. Tin)

V.R.

FRAMES FOR CODE CARDS

21·6·24

Chief Eng. of Sigs & Tels	Drawn by G.W.S.	Traced by G.W.S.	
			F1810

L. 41/28

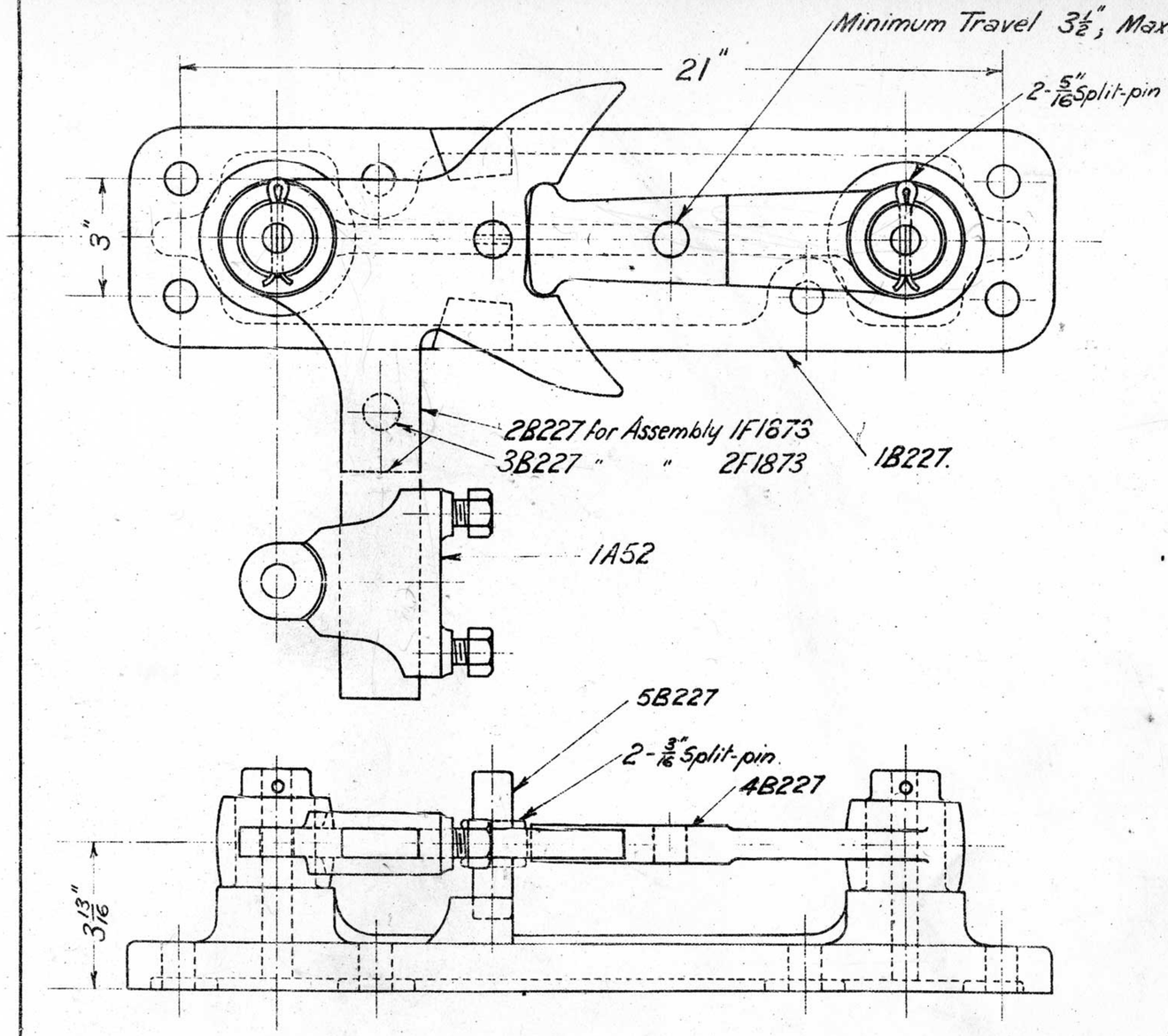

Escapement Crank (adjusting arm) order 1F1873
" " for Tramway Catch Blade " 2F1873

No	Name	Mat	Quantity 1F1873	Quantity 2F1873
1B227	Base	C.I.	1	1
2B227	Crank (Escapement Arm)	M.S.	1	-
3B227	" (" ")	"	-	1
4B227	" (Operating Arm)	"	1	1
5B227	Pin	"	1	1
1A52	Adjusting Clip	"	1	-
Stock	3/16" Split Pin	"	2	2
"	5/16" " "	"	2	2

Redrawn & See Blueprint Dated 13.10.AA

9-2-25

2F1873
1F1873.

This drawing supersedes Drg. C57.

V.R.
Escapement Crank Assembly.
9-2-25

Chief Engr. of Sigs & Tels

Drawn by R.G.C.

Traced by R.G.C.

F1873

L.112/28

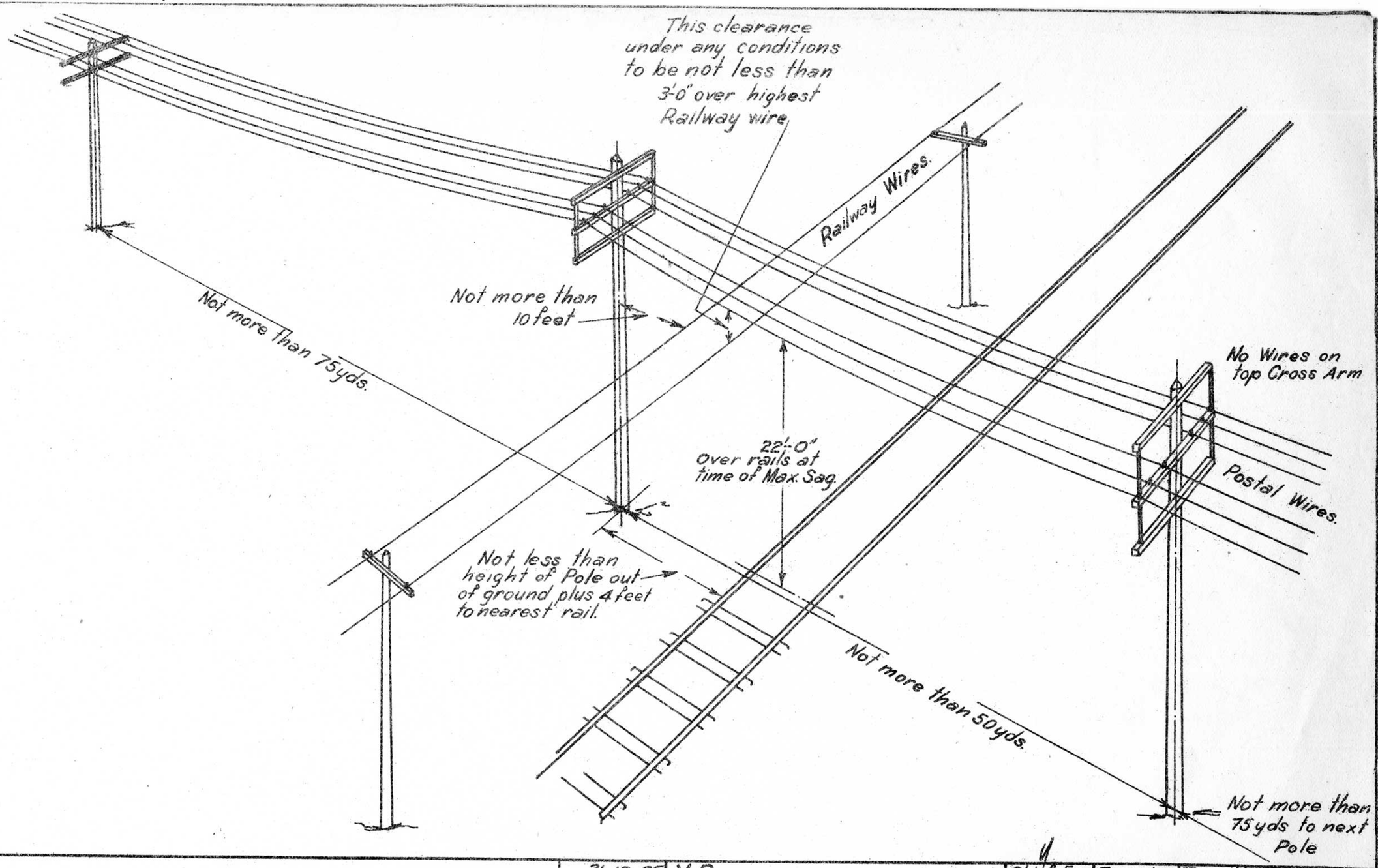

	21-10-25 Alteration No 120 S.C.D.	V.R. POSTAL WIRES CROSSING RAILWAY WIRES (Standard Arrangement) 16-1-25	Chief Engr of Sigs & Tels	Traced from P.M.G. Drg V8077	Traced by L.J.P.	F1891

L.47/28

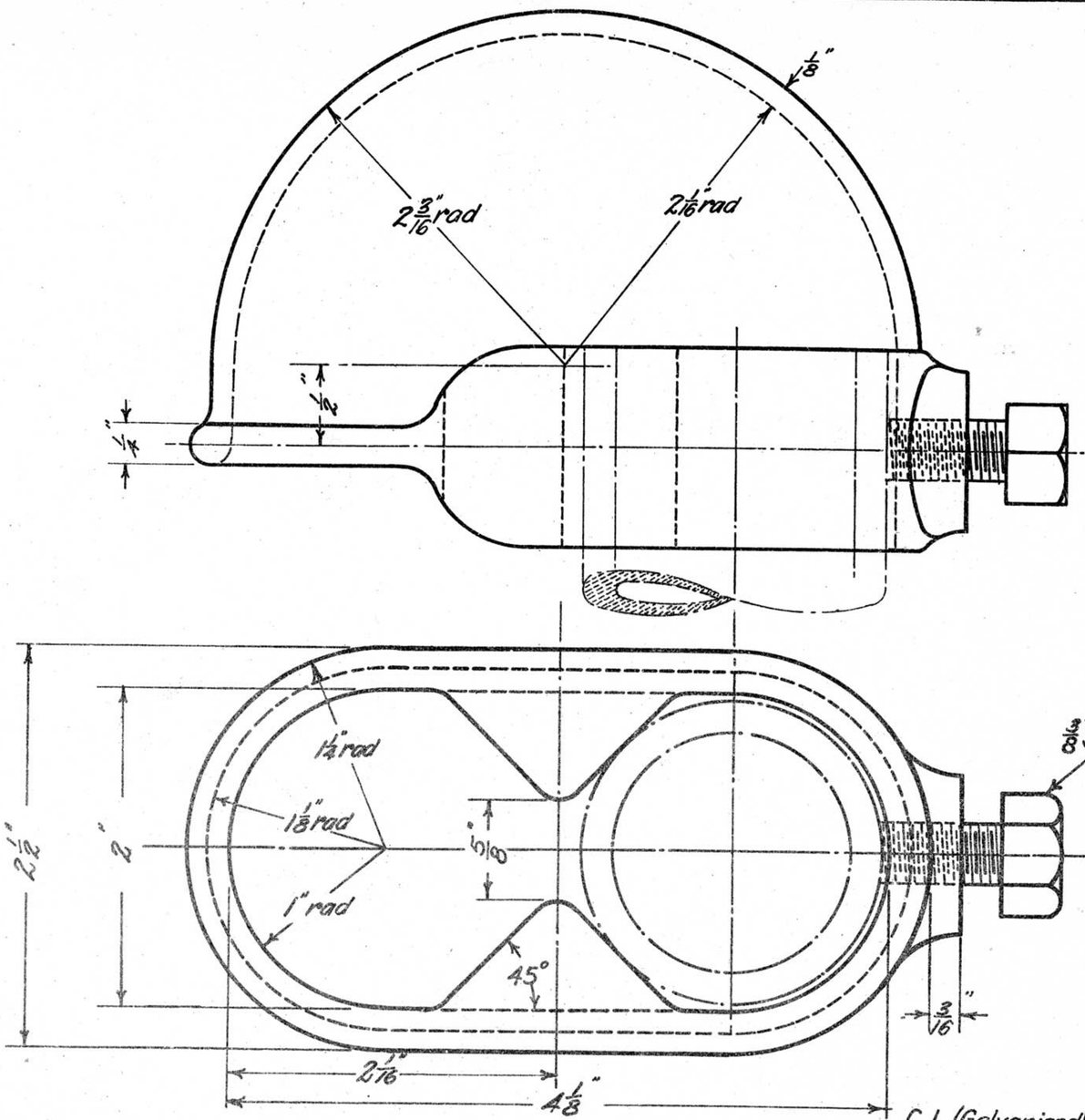

C.I. (Galvanised)
WEATHERCAP

28·1·25

356·25

IF1896

	VR WEATHERCAP FOR 1½" PIPE 28·1·25	Chief Eng'r of Sigs & Tels	Drawn by G.W.S.	Traced by G.W.S.	F1896

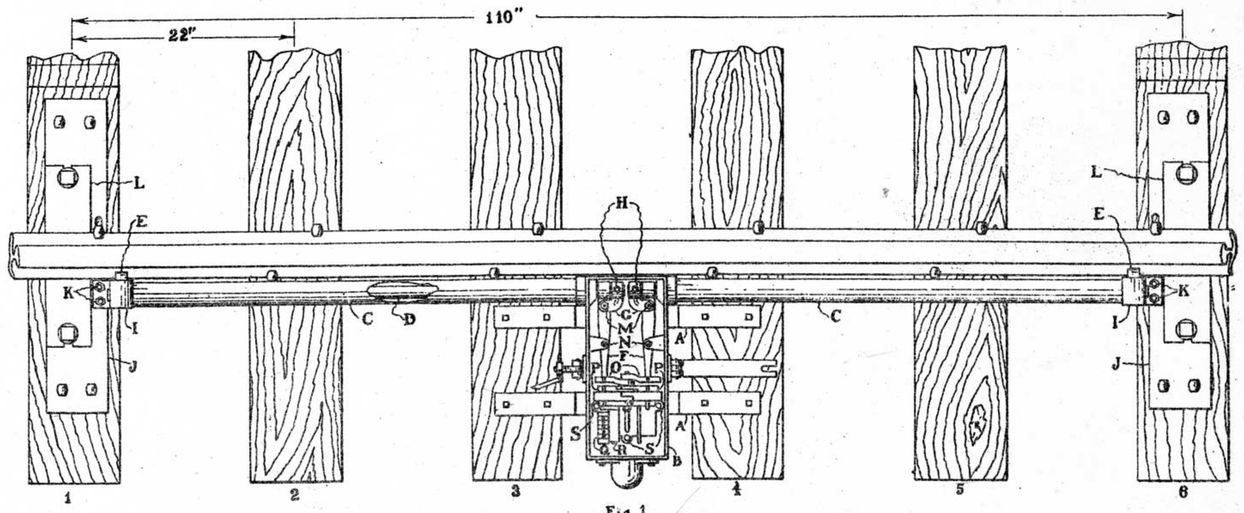

Fig 1



Fig. 2

Directions for Installing Model C-I "Fusticlo" Directional Rail Contact Circuit Controller

Assembly

Attach tie straps A to controller box B, bolts for this will be found in the box.

Preparation of Ties

This instrument makes use of six cross ties, spaced as shown in Fig. 1. Sawed ties are preferred.

Adze cross ties 1 and 6 deep enough to make the adzed surface one inch from the bottom of the rail, fifteen inches each way from center of rail. Cut a notch one-half inch deep and three inches square into these ties to allow space for heads of bolts K.

Raise the track spikes on two ties each way from ties 1 and 6 so that the rail may be lifted three-eighths of an inch above the ties.

Remove spring plates L from tie plates J, turn spring plates upside down and place one tie plate and two spring plates each on ties 1 and 6 as shown in Fig. 2. Now thoroughly tamp all ties both sides of rail, leaving track in same running condition as it should be if no instruments were to be installed. The plates should then be removed and reassembled as they were.

Installation

Assembled tie plates J and spring plates L should next be installed. These are to be placed on cross ties 1 and 6. The assembled plates are not interchangeable. Place them so the small bolt holes in the side will be outside base of rail and on the side of the plate nearest the instrument.

Insert bolts K in the tie plates from under side before sliding plates into place.

Place the assembled instrument between cross ties 3 and 4 and the outside bearing I over bolts K, shifting plates if necessary to make holes line properly. Be sure dogs E are placed so they will swing down above base of rail.

If outside bearings I do not touch tie plates J adze ties 3 and 4 enough to make them touch, or if tie straps A do not touch ties 3 and 4 place shims between ties and tie straps.

Place lock washers and nuts on bolts and make tight, then shift plates and instrument toward the rail until outside bearing I just touches base of rail.

Now fasten tie plates J and tie straps A securely in place.

Adjustment

Turn screws M until milled bosses on secondary levers O, line up with milled bosses on links P, then tighten jam nuts on M. Screws N are used to limit upward stroke of secondary lever F.

If circuit controller is on wrong side remove screws S, take mechanism from box, remove terminal block Q and drum R, place them on opposite side and replace mechanism and screws S.

Oil all moving parts well, after which the instrument is ready for operation.

V.R. Model C.I. Fusticlo
Directional Rail Contact
Circuit Controller
4-2-25

F1901

FP LAYOUT CLASS "Y" HAND OPERATED & PLUNGER LOCKED WITH MECHANICAL DETECTION TYPICAL DRAWING K125

For Material Complete for Standard Layout order thus :- Plunger Locked Set 1F1958; 2F1958, or 3F1958 with Switch Extension Pieces _____ Y= ___ & _____
Any variations from Standard must be stated.

PART Nº	MATERIAL	Hatchet Detector LH Location 1F1958	Hatchet Detector RH Location 2F1958	Slide Detector LH or RH 3F1958	REMARKS
1B40	Lock rod spreader	/	/	/	
1F1955	Foundation plate	/	/	/	
4B42	Tie strap	/	/	/	
1F1768	Plunger	/	/	/	
B34	" box	/	/	/	
1H276	Crank stand	/	/	/	
1F1717	Lever	—	—	/	4F1717 } These parts supplied in place of 1, 2, & 3F1717 respectively when indicator F2307 is used.
2F1717	"	/	—	—	5F1717 }
3F1717	"	—	/	—	6F1717 }
1B338	" guide	/	/	/	
1A368	Hatchet detector (for 2 blades)	/	/	—	Unless otherwise specified no weight will be supplied
F1959	Slide " "	—	—	/	State part number of number of way required (1F1958, 2F1958, 3F1958 etc.)
5A376	Operating rod	/	/	/	X = 6'-0" when ℄ of Taylor Lever is 4'-9" Std from Gauge Line.
7B39	Lock "	/	/	/	X = 5'-1" " ℄ " Lock Box " 2'-6" " " " "
12A337	Detector "	/	/	/	X = 11'-0" } when ℄ of first Detector is not more than 9'-8" from Gauge Line.
1A340	" "	—	—	/	X = 43'-3" } Standard position being 5'-8" 6'-6" 7"-6
5A340	" "	/	/	—	X = 43'-3" }
8A337	" blade Std length	/	/	—	} If more than 2 Detectors ordered length of blade to be increased as shown in Part Number.
9A337	" " " "	/	/	—	
14A337	" " " "	—	—	/	
16A337	" " " "	—	—	/	
See drg F1301	Switch extension piece Y = 13"	/	/	—	With extension lug.
	" " " Y = 11"	—	—	/	" " "
	" " "	/	/	/	Without " "
Stock	Fixing coach screws	8	8	8	3½" × 3"
	" " "	4	4	4	½" × 2½"
	" " "	3	3	3	¾" × 3½"

See blueprint.

	A11237 21-10-24	A11182 12-8-27	VR PLUNGER LOCKING CLASS "Y" LAYOUT MATERIAL LIST 22.4.25	Chief Eng'r of Sigs & Tels	Drawn by G.W.S.	Traced by G.W.S.	F1958

L.169/25

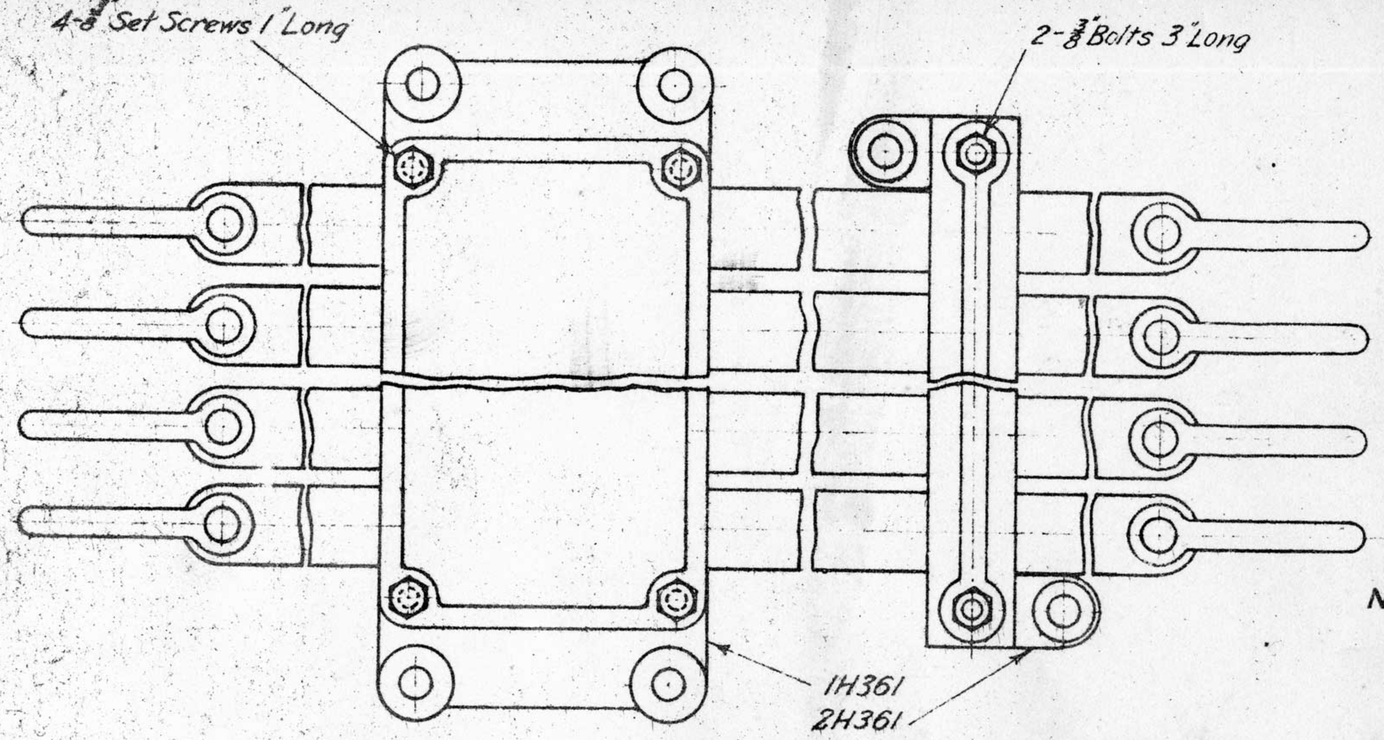

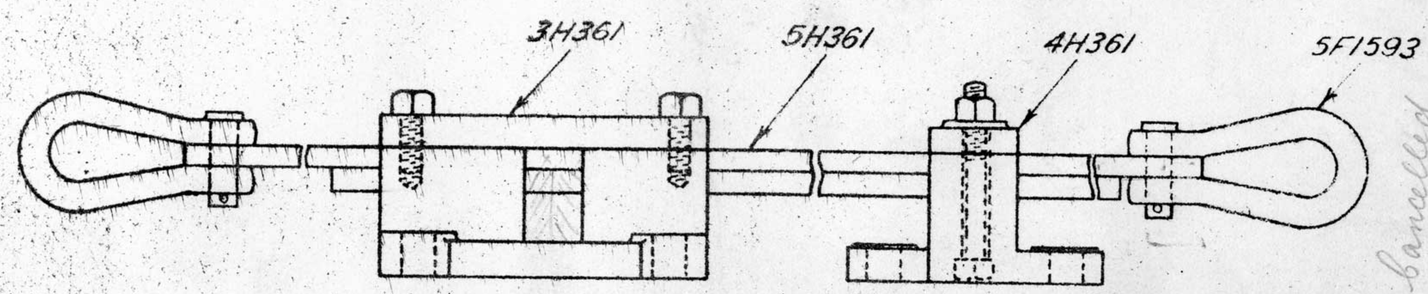

Slide detector box & guide now shown supplied with foundation Plate

SLIDE DETECTOR COMPLETE

N°	Name	Mater!	Quant
1H361	Slide Detector Box	C i	1
2H361	" Guide	"	1
3H361	Detector Box Cover	"	1
4H361	Guide Cover	"	1
5H361	Slide	M.S.	as reqd
5F1593	Shackles	W.I.	2 per slide
3H685 / 4H685	Foundation Plate for 1 Slide Box } " " " 2 " " }	MS	As Reqd
Stock	⅜" Set Screws 1" Long		4
	⅜" Bolts 3" Long		2
	½" Coach Screws 3" Long		64
	⅝" Bolts 3" Long		6

NOTE :-

Supplied for 2 blades unless otherwise specified.

Slide Detector Comp. with 12 Slides — 12F1959
" " " " 11 " — 11F1959
" " " " 10 " — 10F1959
" " " " 9 " — 9F1959
" " " " 8 " — 8F1959
" " " " 7 " — 7F1959
" " " " 6 " — 6F1959
" " " " 5 " — 5F1959
" " " " 4 " — 4F1959
" " " " 3 " — 3F1959
" " " " 2 " — 2F1959
Slide Detector Comp with 1 Slide — 1F1959

Cancelled

1	26-9-36 Parts 3 & 4 H685 with 6-⅜" Bolts added.	V.R.	SLIDE DETECTOR ASSEMBLY	Traced by G.W.S. F1959
			3-6	

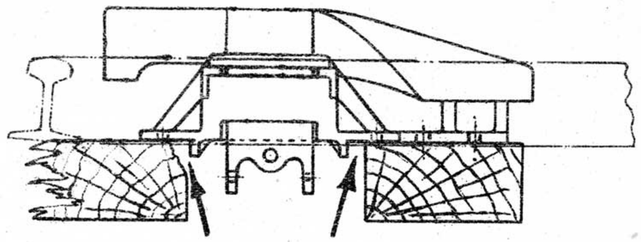

The sleeper on right should be placed hard up against the vertical flange on the under side of cradle. The sleeper on left should have a square edge to give vertical flange a good bearing. These supports to cradle are needed to hold the derail in position when struck by a wheel

FIG. 1

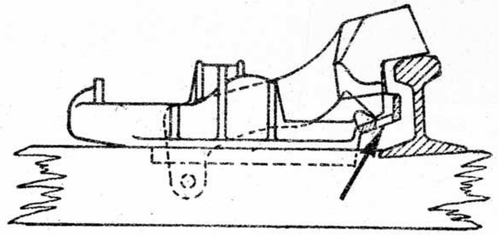

Derail is too low with respect to rail. The tongue has not completed its movement. The head of rail is not covered and the locking seats do not engage. see Fig. 4.

FIG. 3

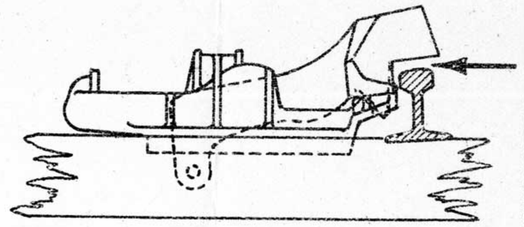

Derail is too high with respect to rail and will probably be broken when struck by a wheel. see Fig. 6

FIG. 5

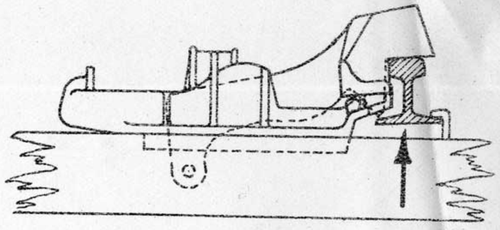

The sleepers are not tamped up to a firm bearing under the rail which will be forced down on to the sleeper by wheel. The condition will then be as in Fig. 5. The sleepers must be tamped up to a firm bearing under rail and before derail is fitted. see Fig. 6

FIG. 7

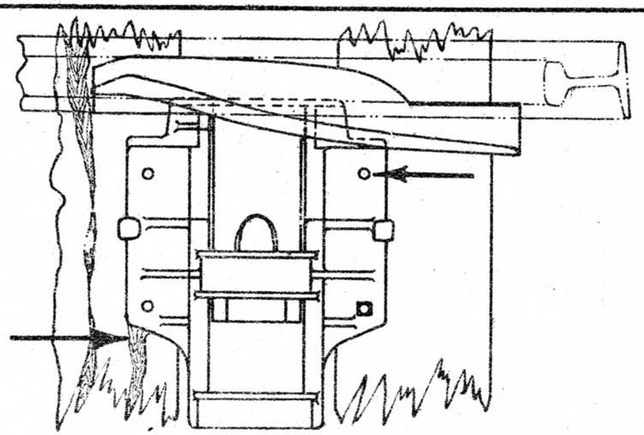

The sleeper on left is split and derail is not securely fixed. When struck by a wheel the derail may be forced away from rail and result in a non-derailment. The cradle must be securely fixed by coach screws or spikes in each hole and slot provided, and split sleeper replaced by a sound one.

FIG. 2

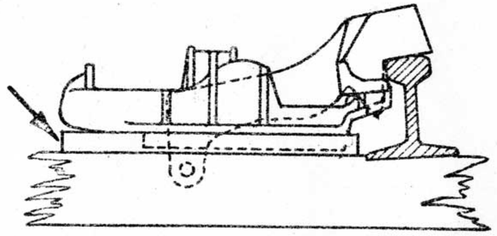

When derail is too low with respect to rail as in Fig. 3 this method of installing must be used. The derail is packed up the required amount.

FIG. 4

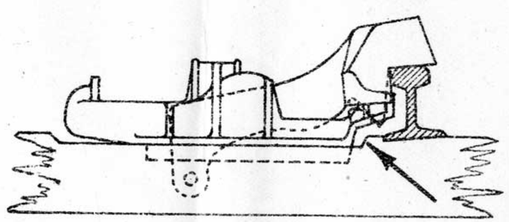

When derail is too high with respect to rail as in Figs. 5 and 7 this method of installing must be used The sleeper is cut away only sufficient to allow cradle to be let in.

FIG. 6

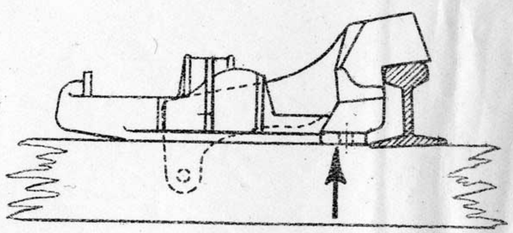

After derail has been correctly fitted the support is adjusted between the sleeper and tongue (see Fig. 1) and firmly coachscrewed to sleeper

FIG. 8

The derail tongue is flat on top and touching on side of rail head showing derail correctly fitted

12-5-26 Alteration No. 137

NOTE This drawing to be read in conjunction with drawing RB 78

V.R. DERAIL TYPE "E" INSTRUCTIONS FOR INSTALLING 25-5-25

Chief Engr. of Sigs. & Tels.

Drawn by L.J.P.

Traced by L.J.P.

F1978

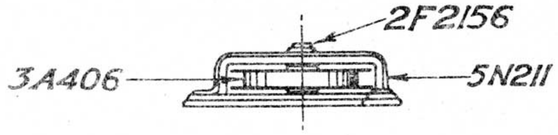

6·1·26 10" SINGLE FLAT WHEEL 1F2130

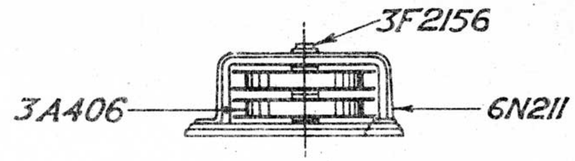

6·1·26 10" DOUBLE FLAT WHEEL 2F2130

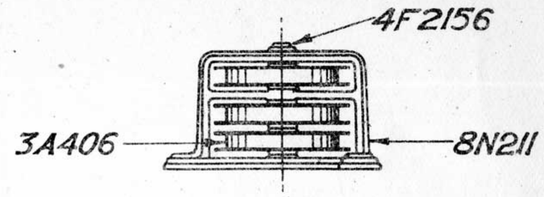

6·1·26 10" TRIPLE FLAT WHEEL 3F2130

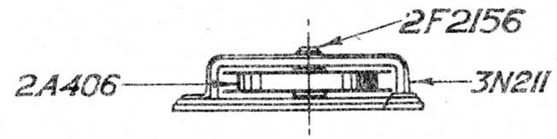

6·1·26 12" SINGLE FLAT WHEEL 4F2130

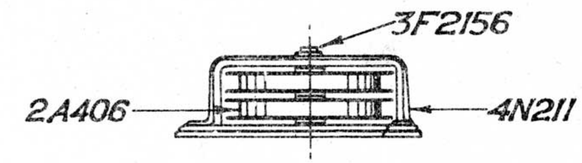

6·1·26 12" DOUBLE FLAT WHEEL 5F2130

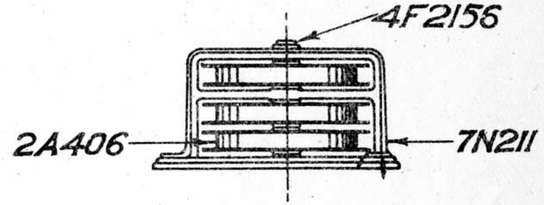

6·1·26 12" TRIPLE FLAT WHEEL 6F2130

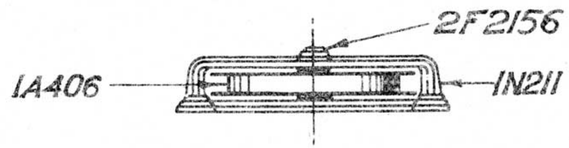

6·1·26 14" SINGLE FLAT WHEEL 7F2130

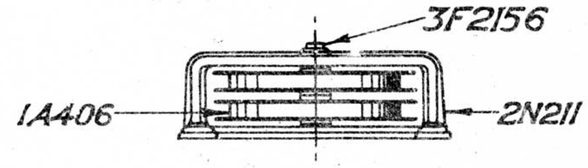

6·1·26 14" DOUBLE FLAT WHEEL 8F2130

V.R. WHEELS FOR SIGNAL LEADS
FLAT WHEEL ASSEMBLY
6·1·26

Chief Eng of Sigs & Tels

Drawn from Samples.

Traced by E.A.

F2130

L.176/28

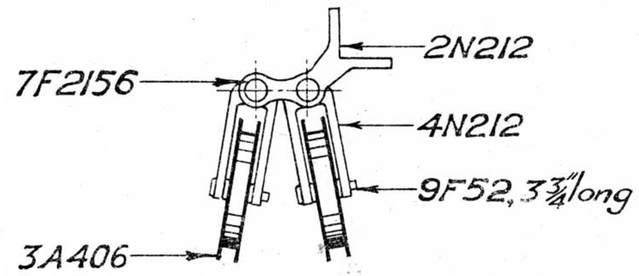

Distance piece 7N212

6·1·26 10"DOUBLE SWIVEL WHEEL 2F2131

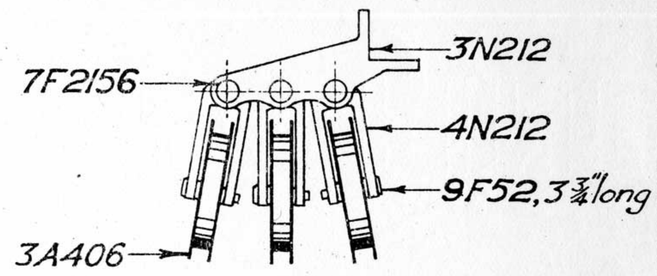

Distance piece 7N212

6·1·26 10"TRIPLE SWIVEL WHEEL 3F2131

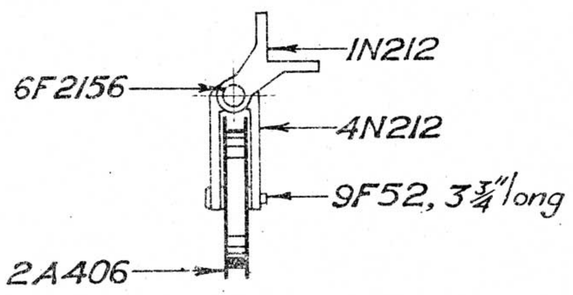

6·1·26 12"SINGLE SWIVEL WHEEL 4F2131

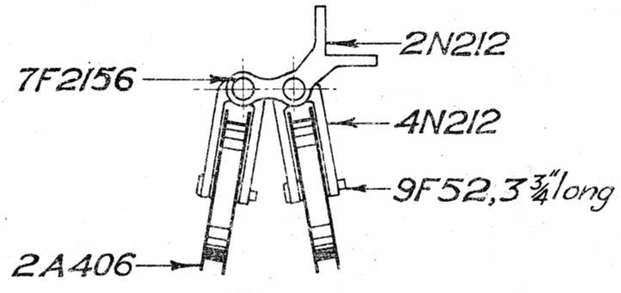

Distance piece 7N212

6·1·26 12"DOUBLE SWIVEL WHEEL 5F2131

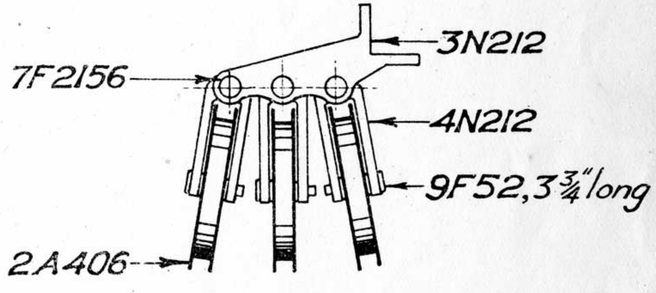

Distance piece 7N212

6·1·26 12"TRIPLE SWIVEL WHEEL 6F2131

V.R. WHEELS FOR SIGNAL LEADS
SWIVEL WHEEL ASSEMBLY
6·1·26

Chief Eng of Sigs & Tels 6.1.26 | Drawn from Samples | Traced by E.A.

F2131

L.177/28

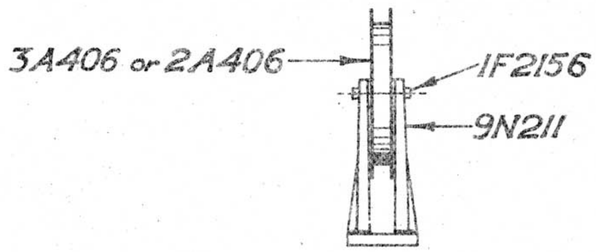

6·1·26 SINGLE VERTICAL WHEEL 12"—2F2132 10"—1F2132

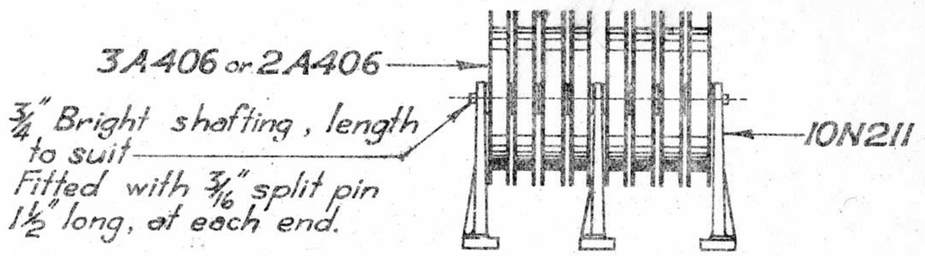

Nº of Way to be stated when ordering.

Details to be stated when ordering. Intermediate frames to be not more than 4 wheels apart.

6·1·26 10" or 12" MULTIPLE VERTICAL WHEELS 12"—5F2132 10"—4F2132

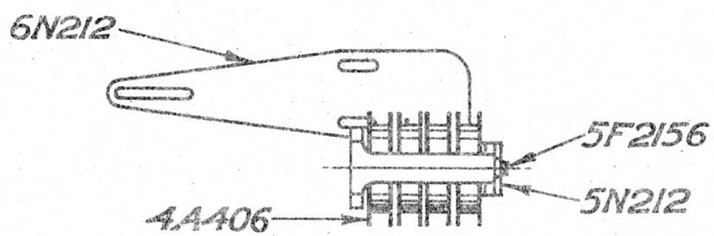

6·1·26 8" CORNER WHEELS 3F2132

V.R. WHEELS FOR SIGNAL LEADS
VERTICAL & CORNER WHEEL ASSEMBLY 6·1·26

Chief Eng of Sigs & Tels

Drawn from Samples

Traced by E.A.

F2132

L.176/28

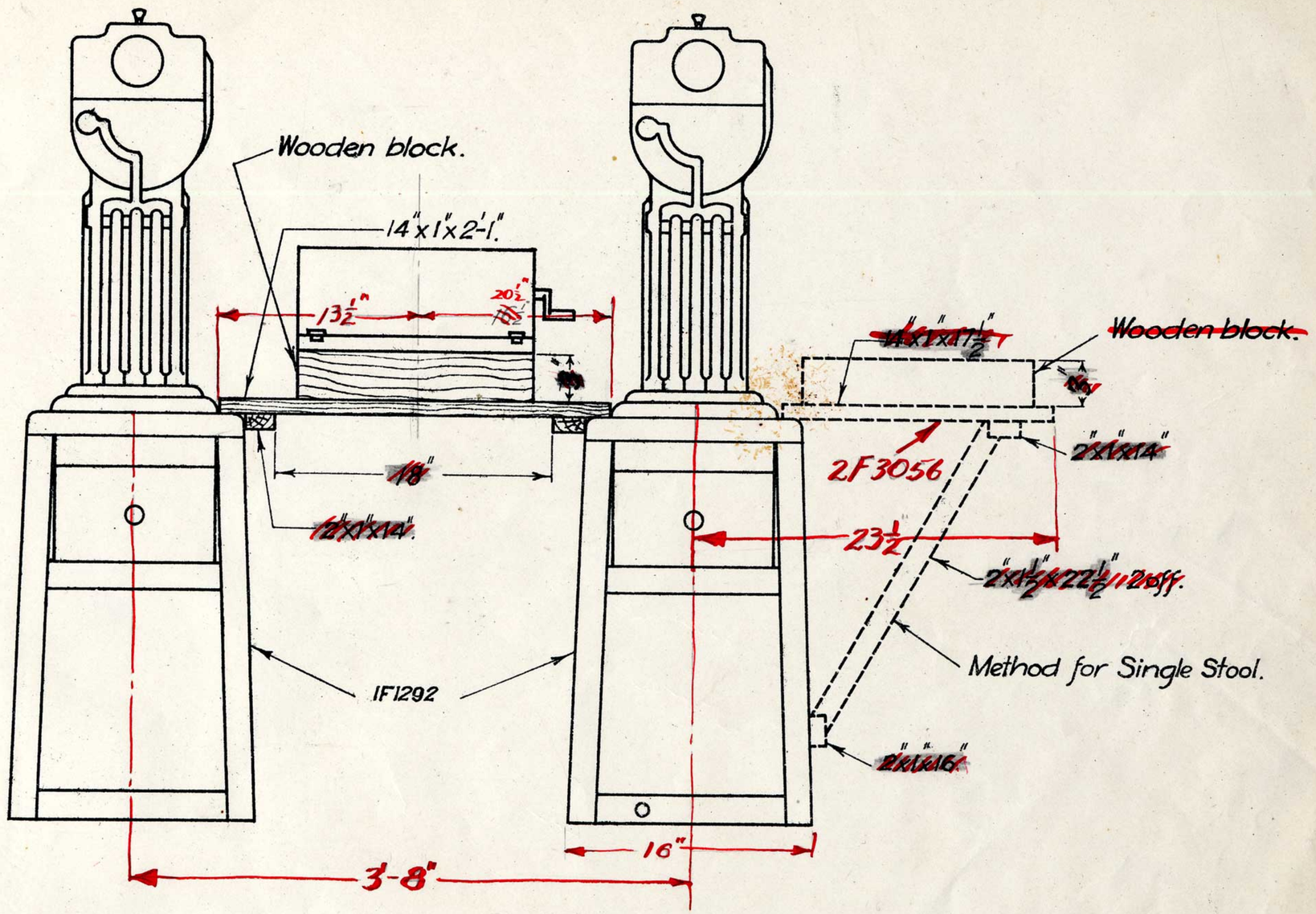

~~For mounting at side of Stool — 2F2160~~

~~" " between Stools — 1F2160~~

30-4-48 Alteration No 682	29-4-36 Alteration No 321	24-10-34 Alteration No 297	17-10-28 Part Nos 1F2160 & 2F2160 added L.J.P	2-6-26 Alteration No 139 K.C.H.C.	V.R. MIN. STAFF INST. Method of mounting Magneto Generator 5-1-26	Chief Eng Sigs. & Tels.	Drawn by K.C.H.C.	Traced by K.C.H.C.	F2160 45-26

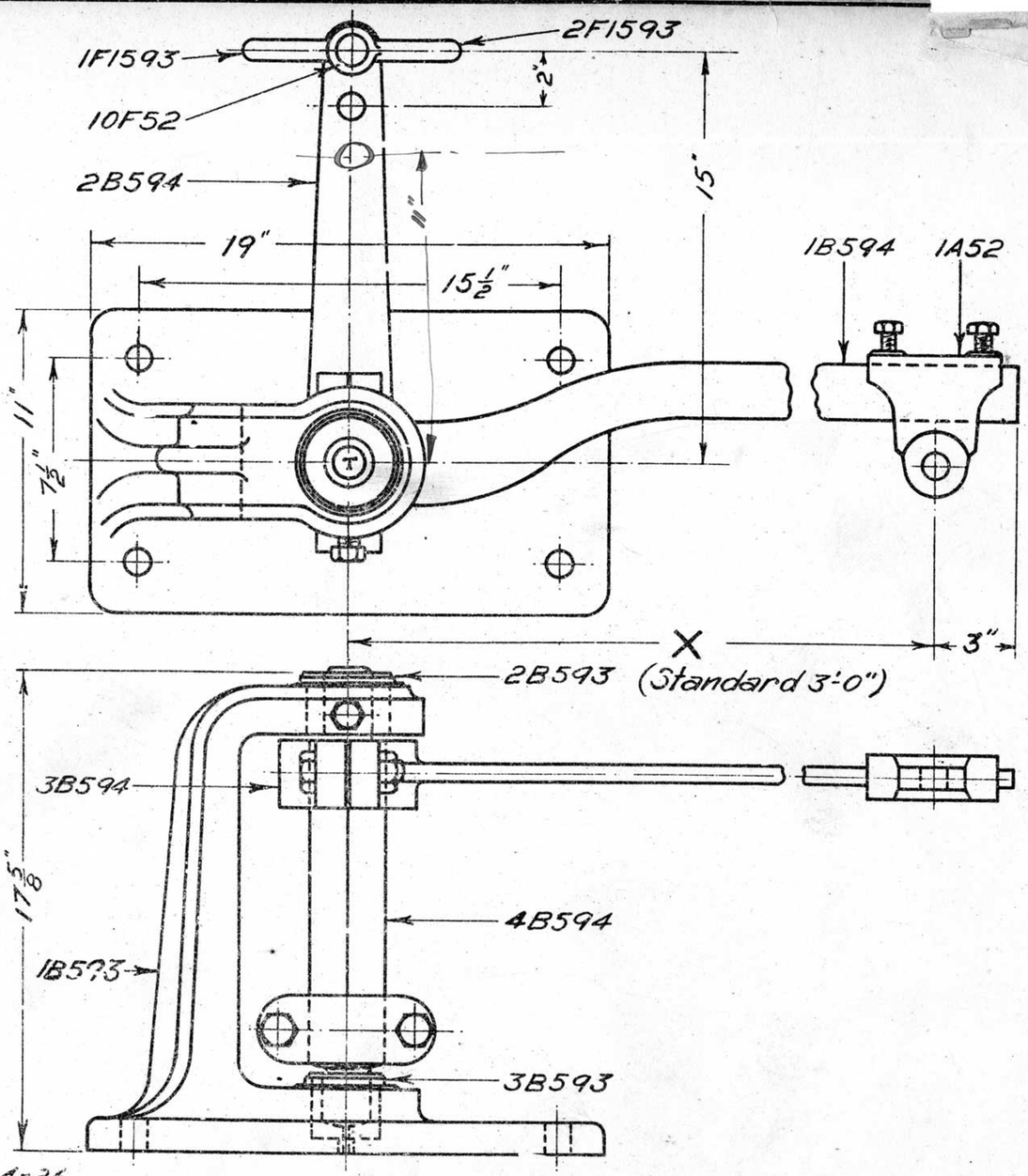

21-4-26

LIFT CRANK (Complete) – 1F2194

No.	NAME	Mat.rl	Qnty.
1B593	Crank Stand	C.I.	1
2B593	Top Bush	G.M.	1
3B593	Bottom Bush	"	1
1B594	Top Arm	W.I.	1
2B594	Bottom Arm	"	1
3B594	Cap	"	2
4B594	Spindle	M.S.	1
1A52	Clip	M.I.	1
‡ 1F1593	Shackle	W.I.	1
‡ 2F1593	"	"	1
‡ 10F52	Pin 4½" long	M.S.	1
Stock	¾" Whit. Bolt 3¼" long	M.S.	4
	⅝ " Set Screw 1½" long	"	1

‡ For these 3 items complete as separate unit order 3F1593

Length 'X' to be stated

1F2194

This Drawing supersedes Drg F1591

V.R. COTTEW GATE GEAR
LIFT CRANK Type 'B'
ASSEMBLY
21-4-26

Chief Engr of Sigs & Tels.

Drawn from X668

Traced by L.J.P

F2194

L.175/28

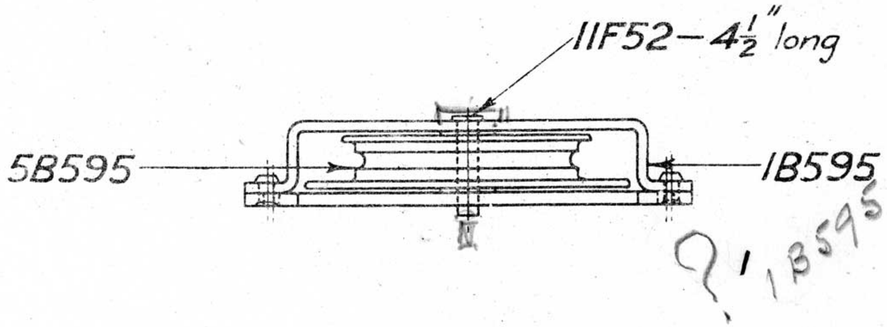

16·4·26 FLAT WHEEL (1 Way) 1F2195

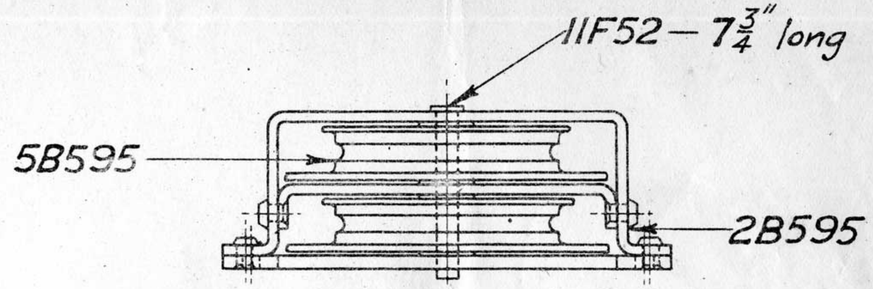

16·4·26 FLAT WHEEL (2 Way) 2F2195

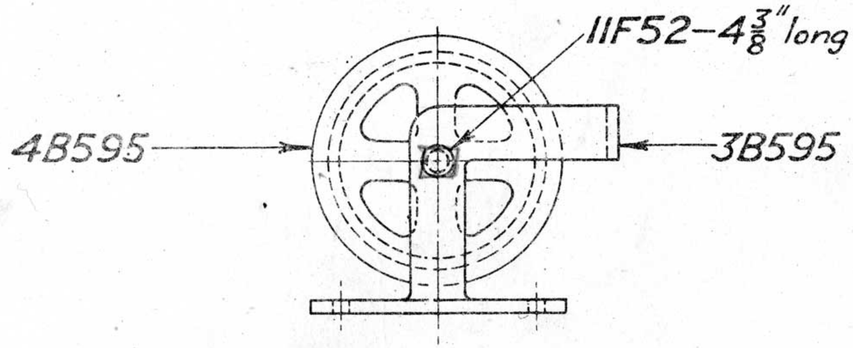

16·4·26 VERTICAL WHEEL 3F2195

Redrawn
See Blueprint
Dated
3·8·39.

V.R. WHEELS FOR GATE LEADS ASSEMBLY 16·4·26	Chief Eng Sigs & Tels	Drawn from Samples	Traced by E.A.	F2195

L.175/28

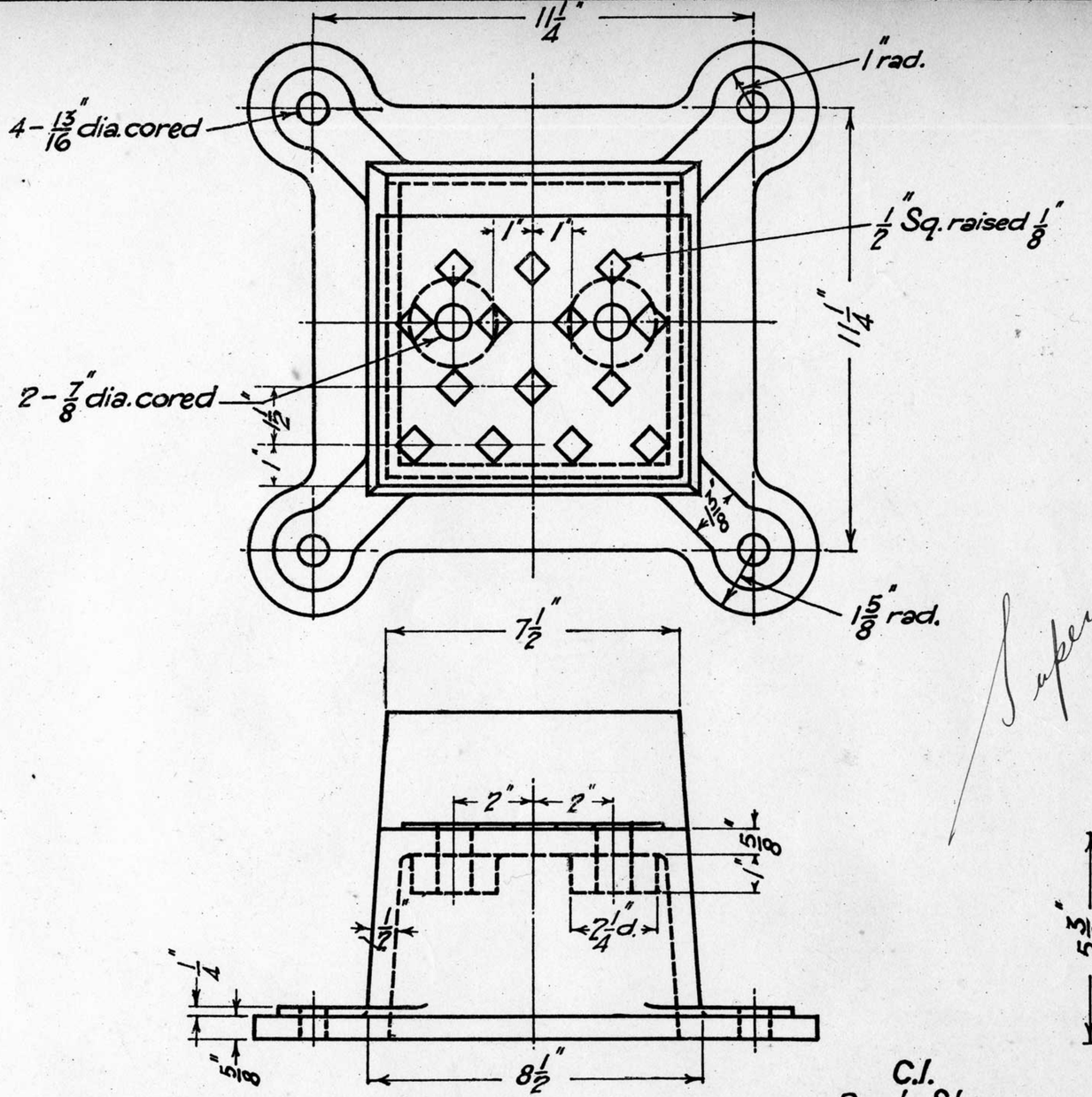

C.I.
Back Stop

Superseded by Drawing F3779
13-8-43.

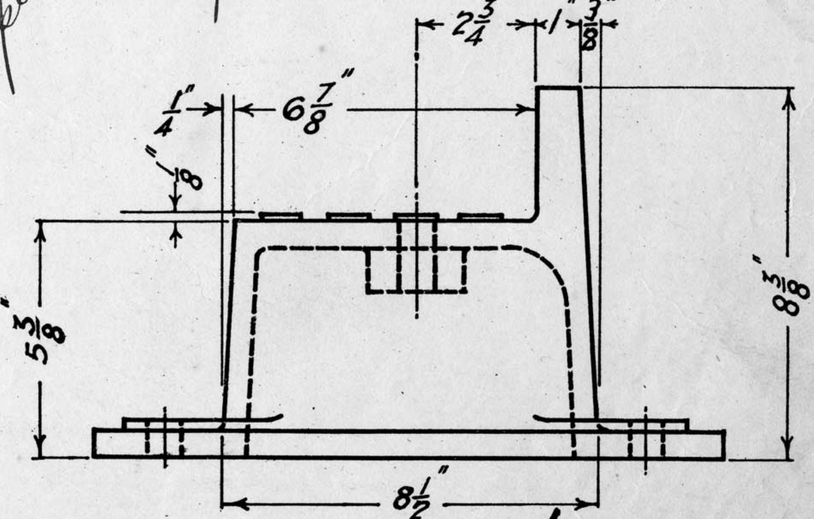

Back Stop IF2225

V.R. Back Stop for Interlocked Gates 12-6-26

Chief Eng. Sigs. & Tels.

Drawn from Sample

Traced by K.C.H.C.

F2225

1964.26

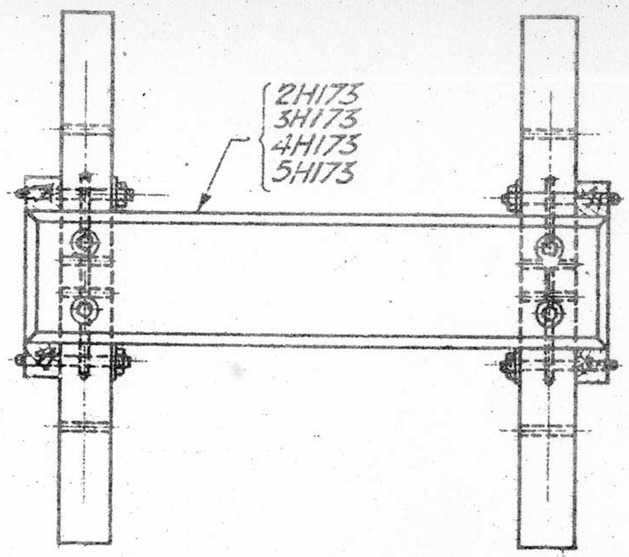

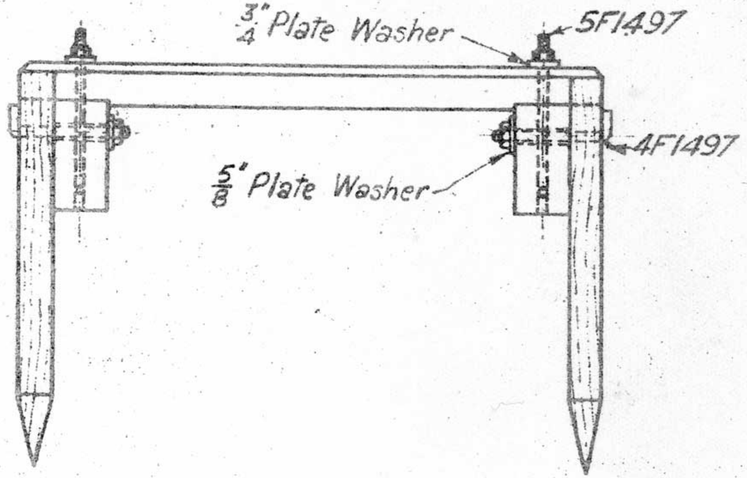

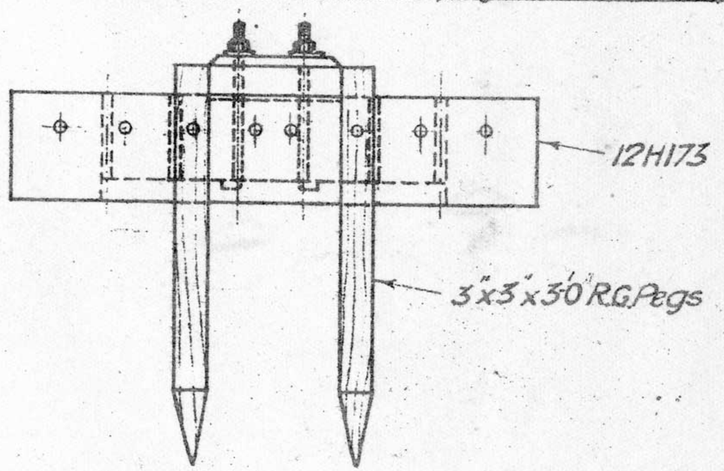

Foundation Complete

1F2232 for Crank
2F2232 " Compensator N.P.
3F2232 " " O.P.
4F2232 " Point Lever
5F2232 " 2 Compensators N.P.

Part No	Name	Mat.	Quantity				
			1F2232	2F2232	3F2232	4F2232	5F2232
2H173	Slab	Concrete	1	—	—	—	—
3H173	"	"	—	1	—	—	2
4H173	"	"	—	—	1	—	—
5H173	"	"	—	—	—	1	—
12H173	Bearers	"	2	2	2	2	2
5F1497	L Bolts	M.S.	4	4	4	4	8
4F1497	"	"	4	4	4	4	4
Stock	3"x3"x3'-0" Long pointed peg	Red Gum	4	4	4	4	4
"	5/8" Plate Washers	W.I	4	4	4	4	4
"	3/4" Plate Washers	"	4	4	4	4	8

17-8-26/Alt. 150
18-6-26

5F2232
4F2232
3F2232
2F2232
1F2232

	Alteration No 150 - Part 5F2232 added 17-8-26	V.R. Concrete Slab Foundation for Cranks Compensators & Point Levers Assembly 18-6-26	Chief Eng Signs & Tels.	Drawn by R.G.C.	Traced by K.C.H.C.

F2232

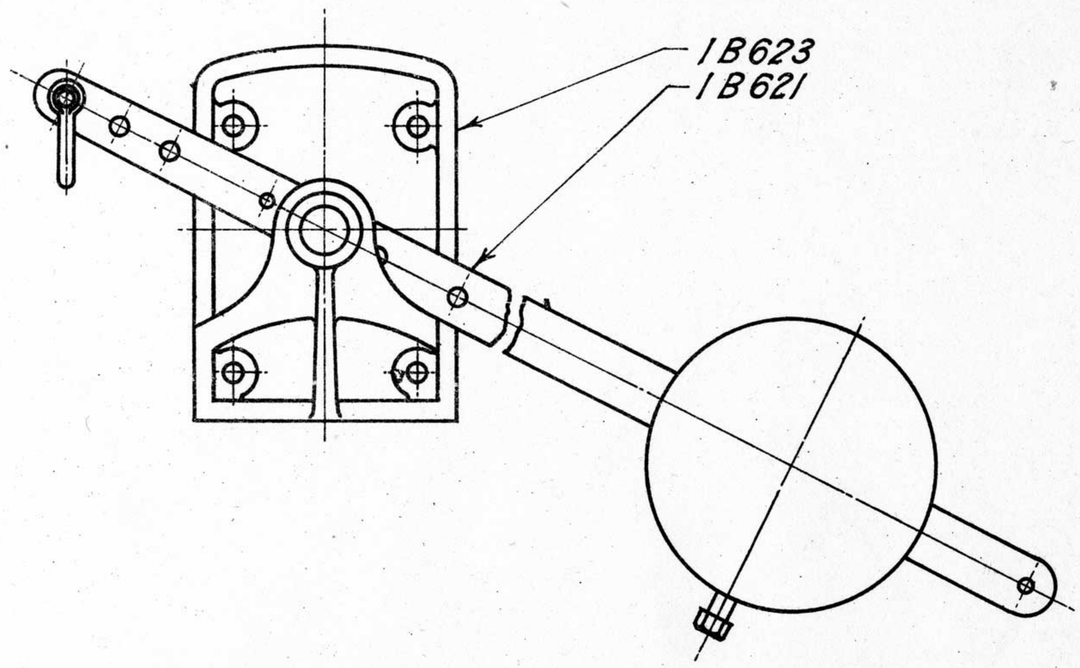

For weight see drawing B622

12-11-26 Lever Plate 1F2249

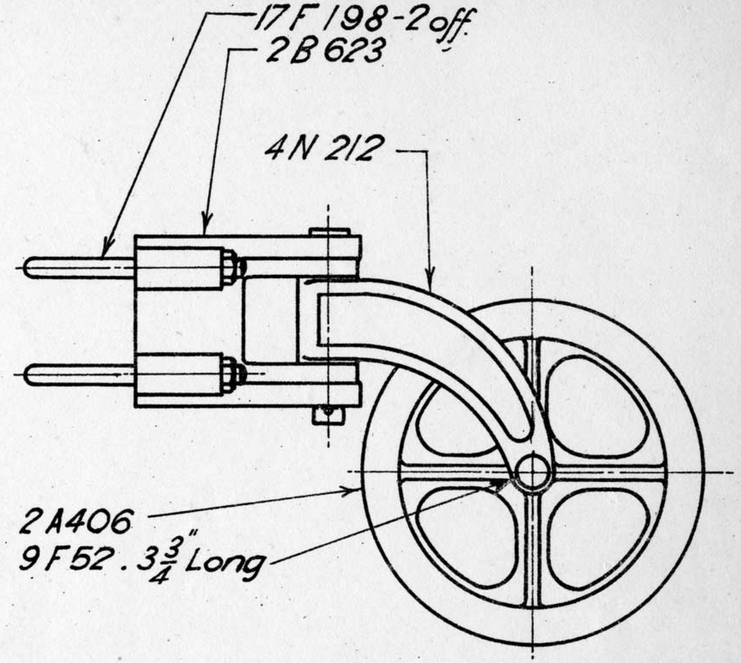

12-11-26 Swivel Wheel 2F2249

V.R. Semaphore Signal (Pipe Mast)
Lever Plate & Swivel Wheel Assemblies 12-11-26

Chief Eng. Sigs. & Tels. [signature]

Drawn from Sample [signature]

Traced by K.C.H.C.

F2249

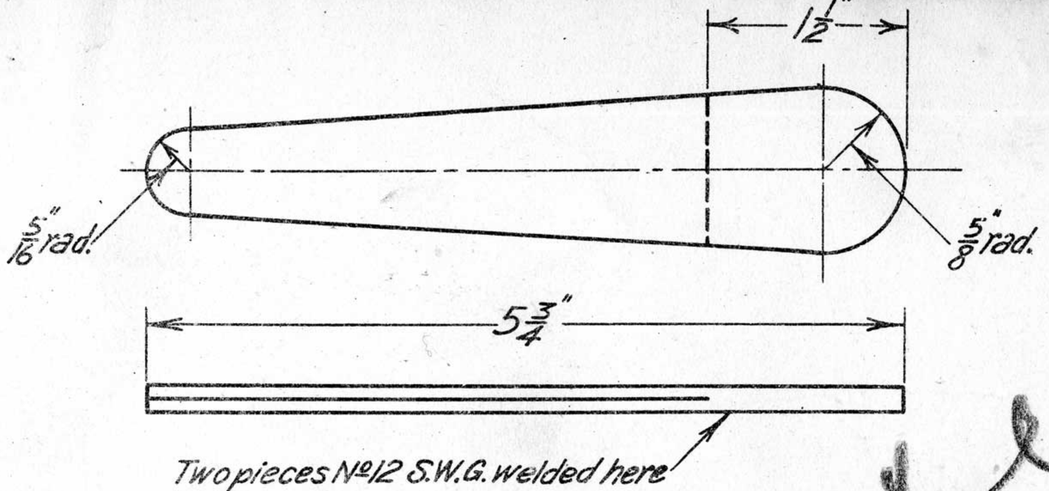

M.S.
COTTER
3F2341

6-7-27

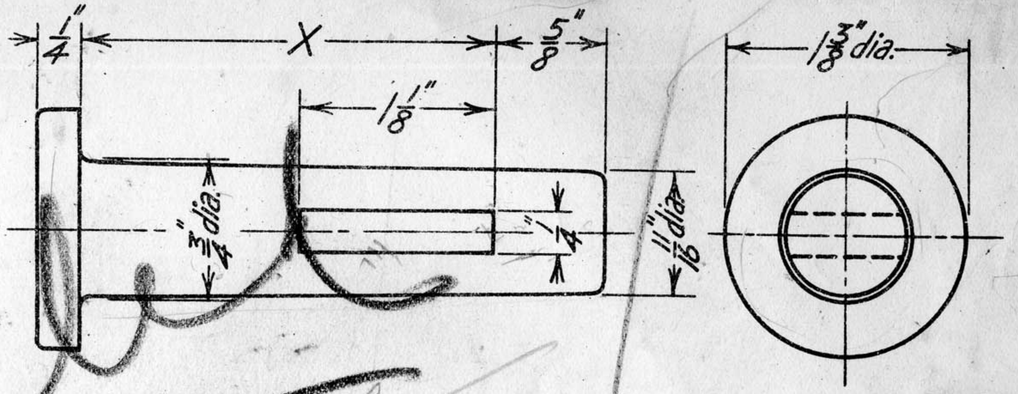

M.S.
PIN

6-7-27

X = 2⅞" 5F2341
X = 2¼" 4F2341

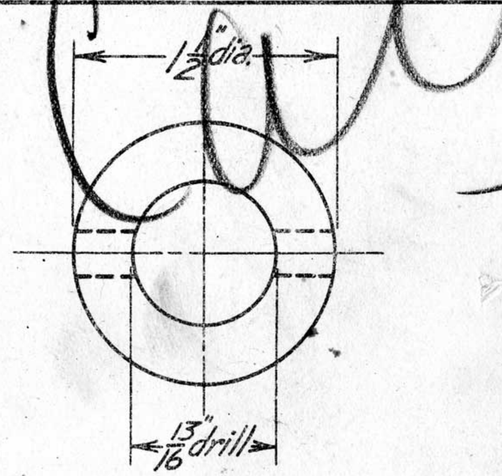

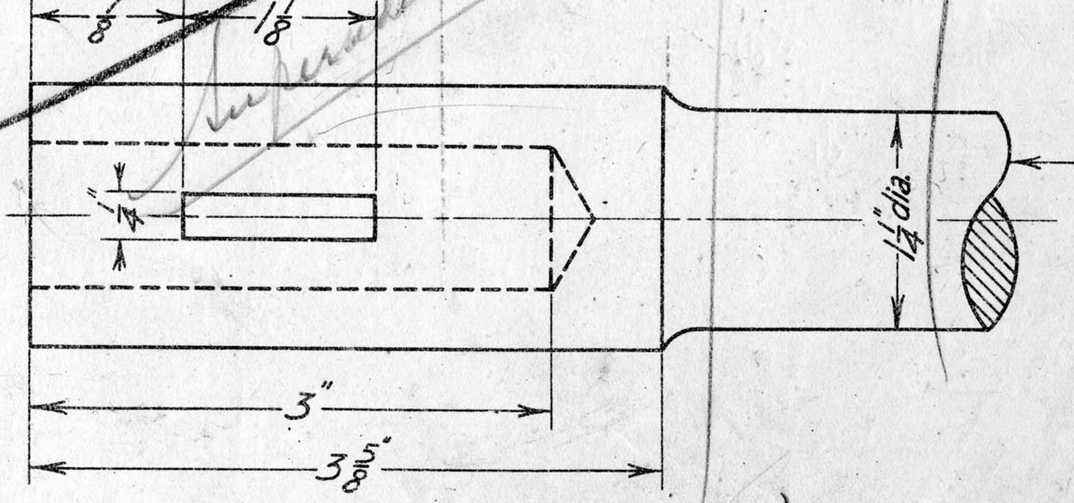

Washers now added
7 F 2341 1¾" × 1 1/16" × 16 gauge
8 F 2341 1½" × 13/16" × 16 Do.
(R.A.)

6-7-27

M.S.
SOCKET END

Socket End only 6F2341
For thick blade (Complete with Pin 5F2341 & Cotter 3F2341) 2F2341
" thin " (" " " 4F2341 " 3F2341) 1F2341

	6-7-27 This Drawing Supersedes Drgs. F1690 & F2159	V.R. SOCKET END FOR 1¼" RODDING 6-7-27	Chief Eng'r Sig's & Tel's	Drawn by C.W.F.	Traced by C.W.F.	F2341

L.177/28

VICTORIAN RAILWAYS

NKC/EMcG.

Office of Chief Civil Engineer.
Melbourne. 5th August, 1942.

Memorandum

FACING POINT LAYOUT - CLASSES "X" & "Y"

Hand Operated and Plunger Locked

Furthering my memo. dated 30.10.41, it has now been decided that the levers mounted on round base crank stands (F2577) may be supplied until the stocks at present in the Store are exhausted and after that the standard lever for this work will be as shown on F3382.

Please mark "Cancelled" on F2577 and Part Nos. 1H276, 1 and 2F1613 and 1F1623 in all Catalogues held by you, also on your Prints of K168 alter 4F3382 to read "7F3382". An alteration has been made to the part numbering of F3382 and revised prints will be issued to you shortly.

Signal and Telegraph
Engineer.

Storekeeper,
SPOTSWOOD WORKSHOPS

Copy has already been received by WMO and amendments made to all drawings. This memo can be rita to Stn Baddon after our further discussion

W G Light

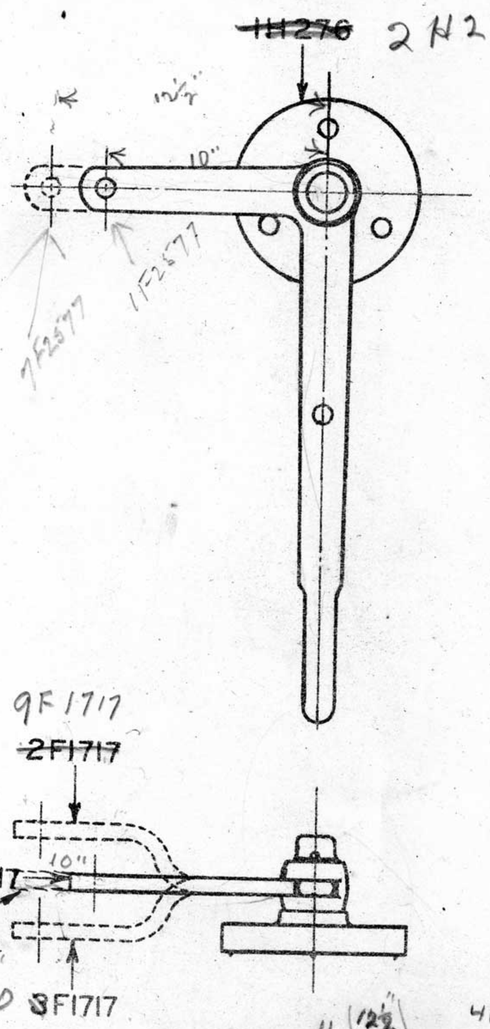

Stand With Lever

STAND WITH LEVER ~~3F1717~~ — ~~3F2577~~

" " " ~~9 8F1717~~ — ~~2F2577~~

" " " ~~10 8 1F1717~~ — ~~1F2577~~

4-3-30.

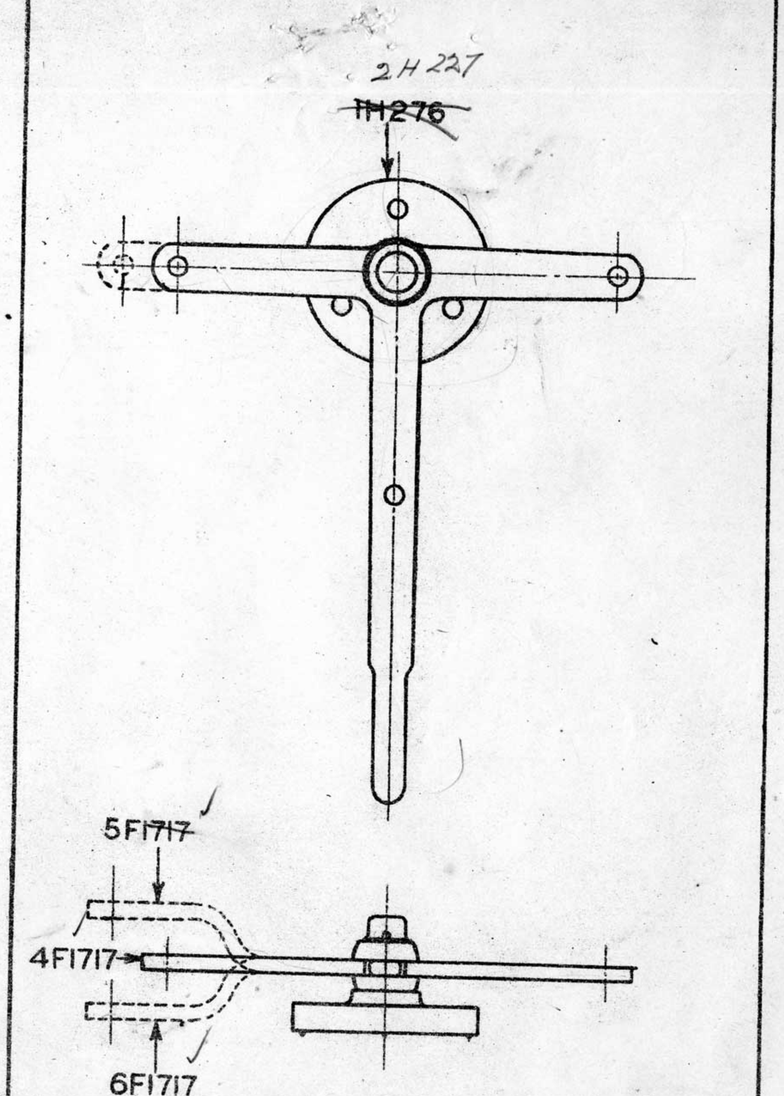

STAND WITH LEVER 6F1717 — 6F2577

" " " 5F1717 — ~~5F2577~~

" " " 4F1717 — ~~4F2577~~

4-3-30.

Superseded by F3382

Cancelled
5/8/42 N.K.C.

V.R.

LEVER FOR PLUNGER LOCKING HAND OPERATED POINTS ASSEMBLY

4-3-30.

CHIEF ENG. SIGS. & TELS.	DRAWN BY	TRACED BY	
	P.J.D.	P.J.D.	F2577

Standard Blocks for Insulated Joints.

(80 lb. "O" Class Rails)

11/6/18

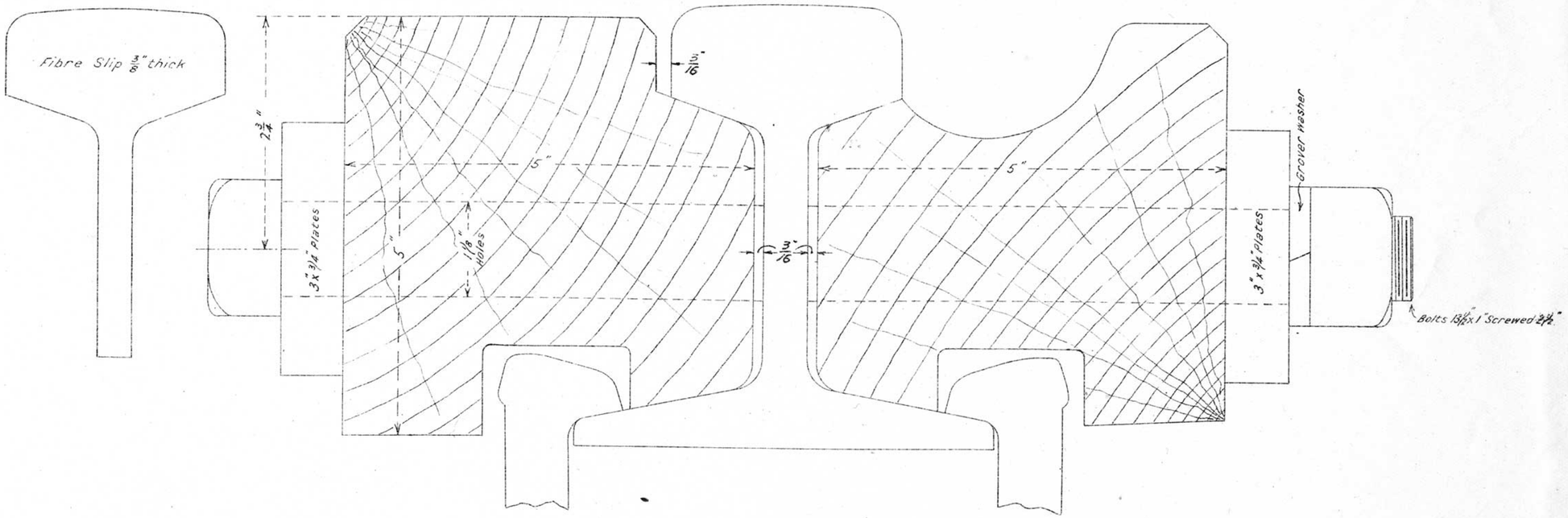

CROSS SECTION

NOTE – Blocks to be of Selected Ironbark or Grey Box.

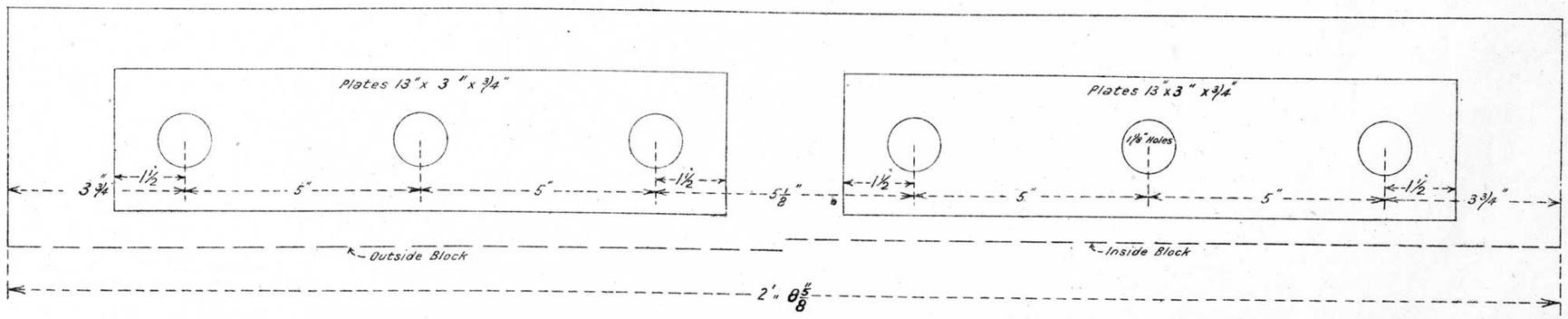

SIDE ELEVATION.

769.08

H31

L.310/23

— Standard Blocks for Insulated Joints. —

(75 lb "H" Class Rails)

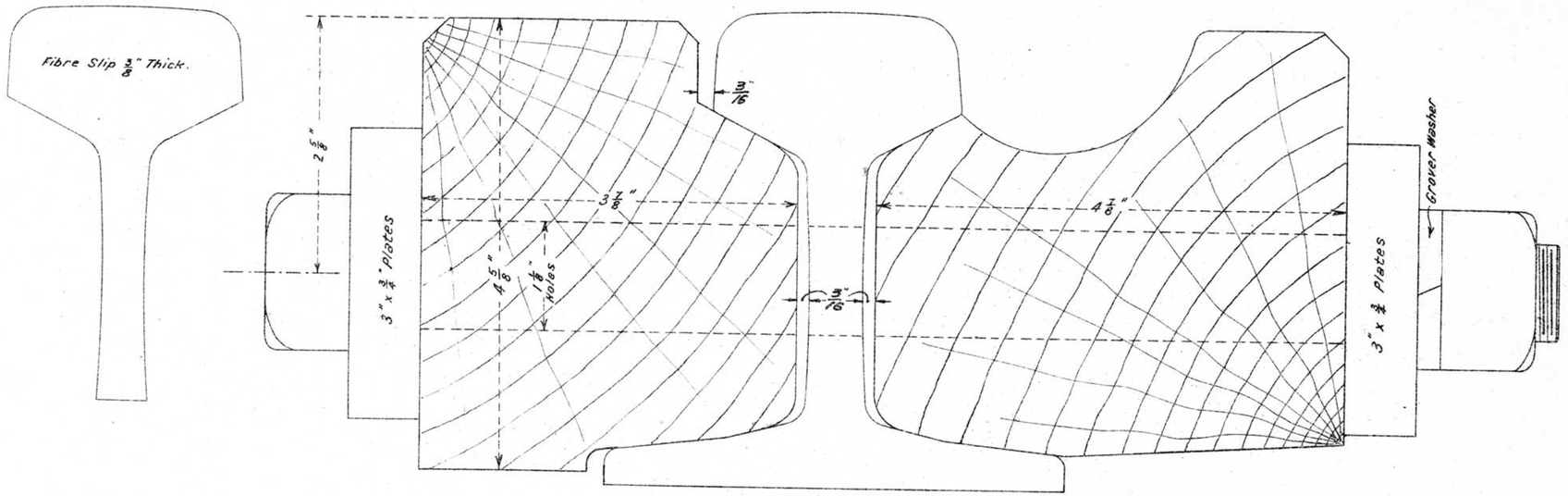

CROSS SECTION

NOTE.

Blocks to be of Selected Ironbark or Grey Box.

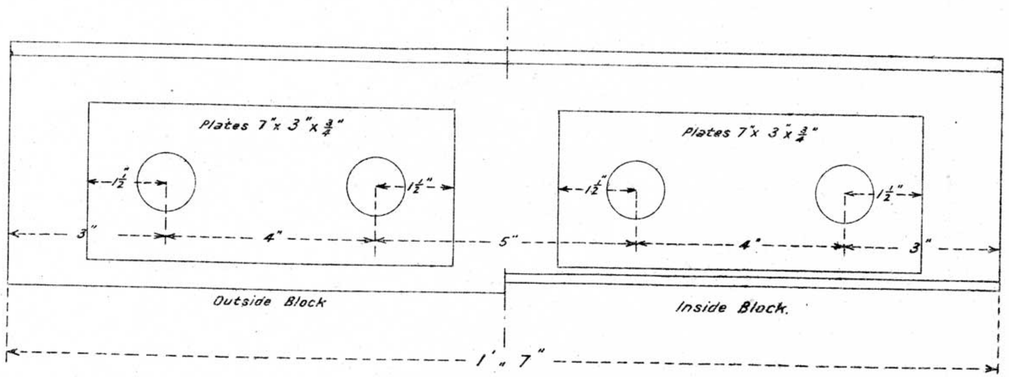

SIDE ELEVATION.

1523-09

M32

L.310/23

V. R.

Standard Blocks for Insulated Joints

100 lb "P" class Rails

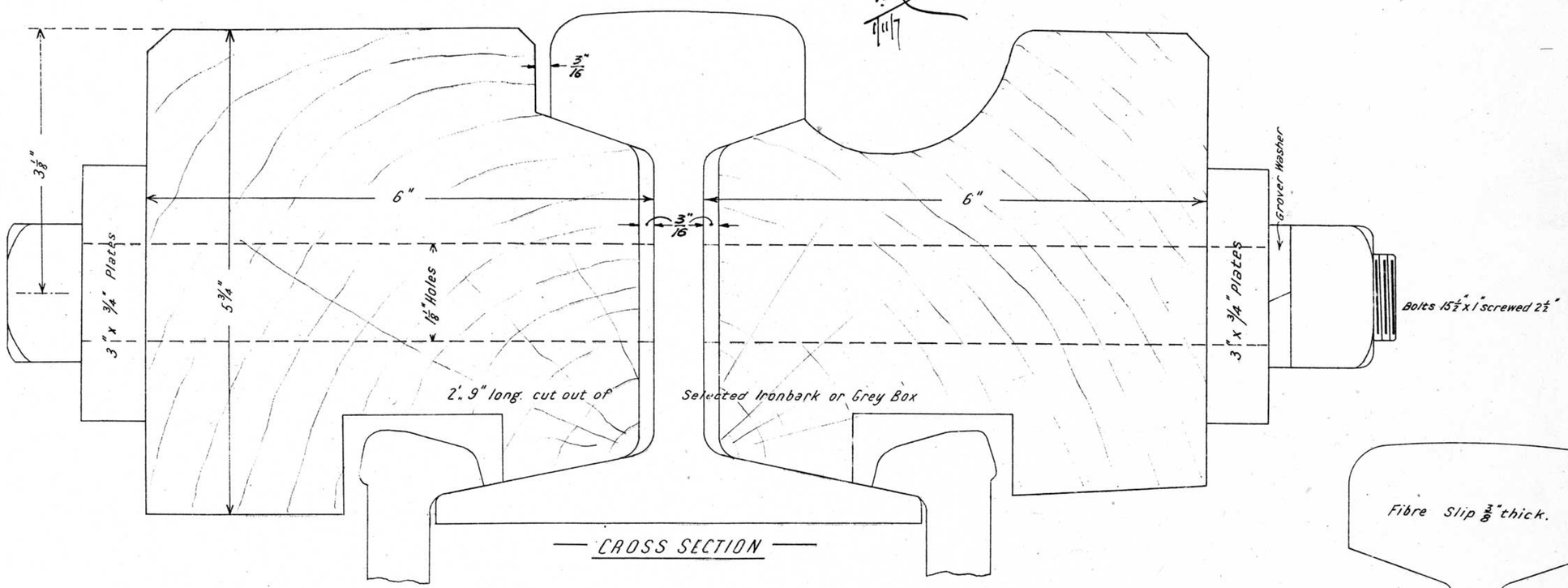

CROSS SECTION

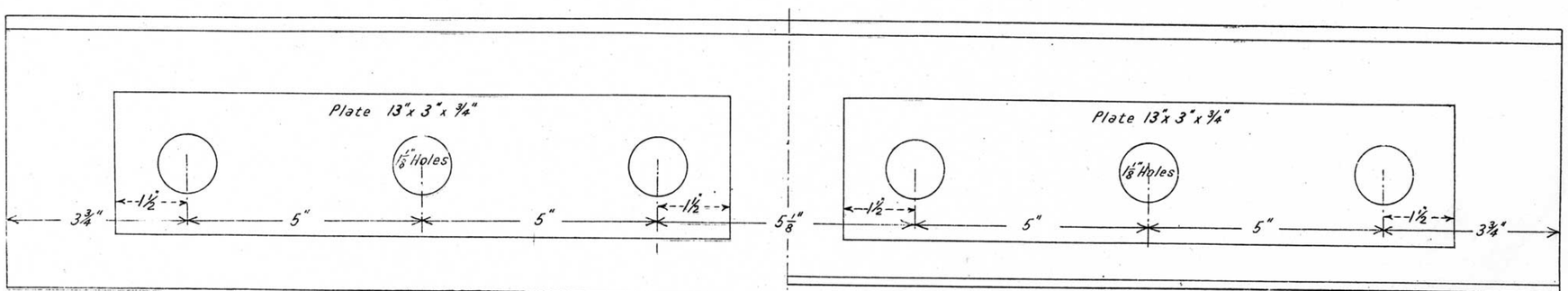

SIDE ELEVATION

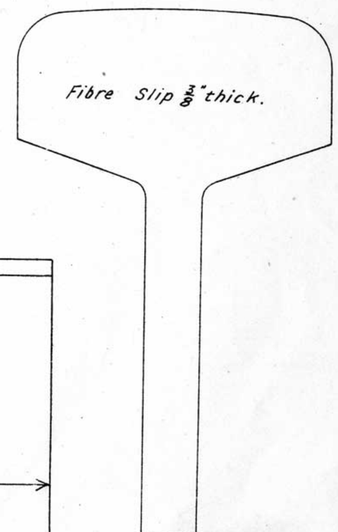

H33 1480-07

L.312/23

Standard Blocks for Insulated Joints

60 lb "D" Class Rails

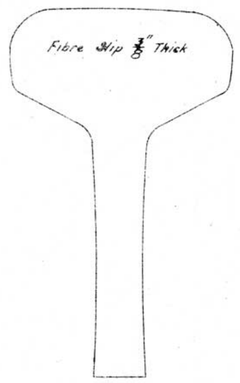

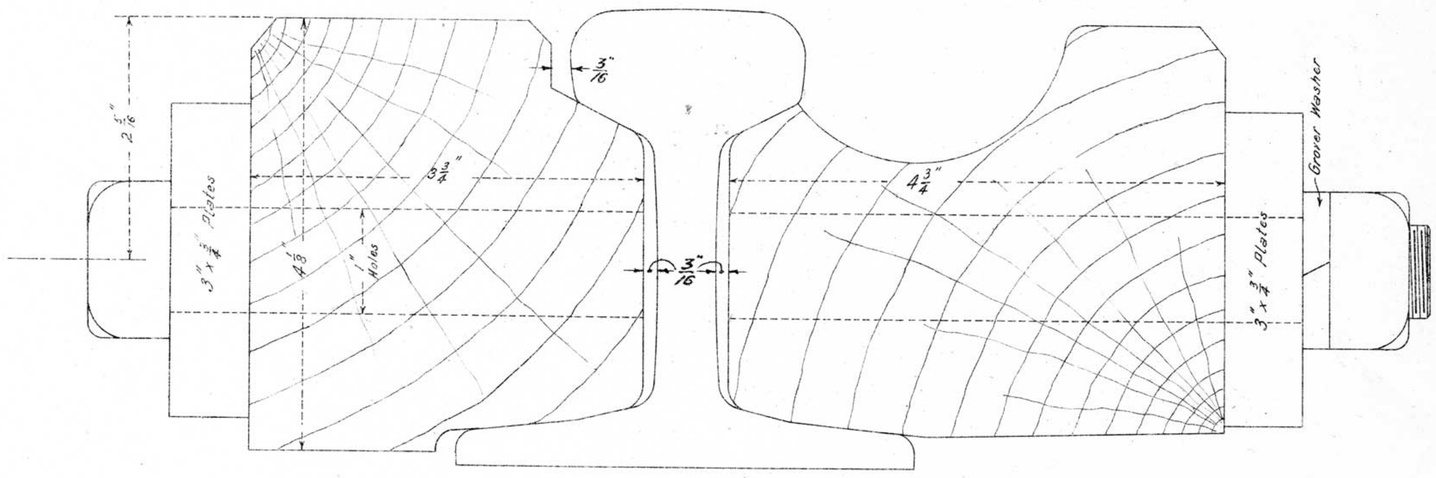

Cross Section

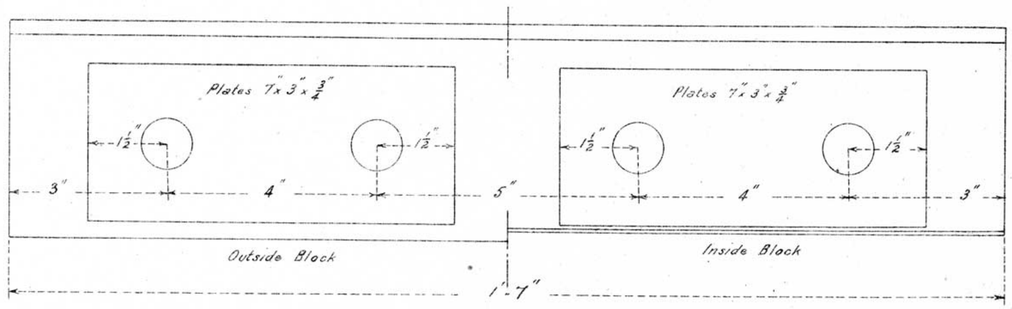

Side Elevation

Note
Blocks to be of Selected Ironbark or Grey Box

219.12

L.311/23

H39

Standard Blocks for Insulated Joints

(75 lb 1" Class Rails)

25.1.12

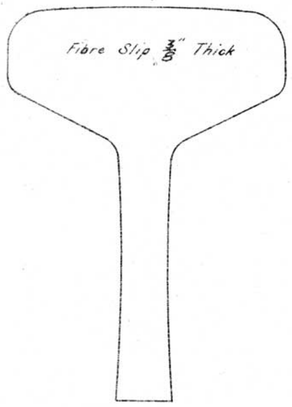

CROSS SECTION

NOTE.

Blocks to be of Selected Ironbark or Grey Box

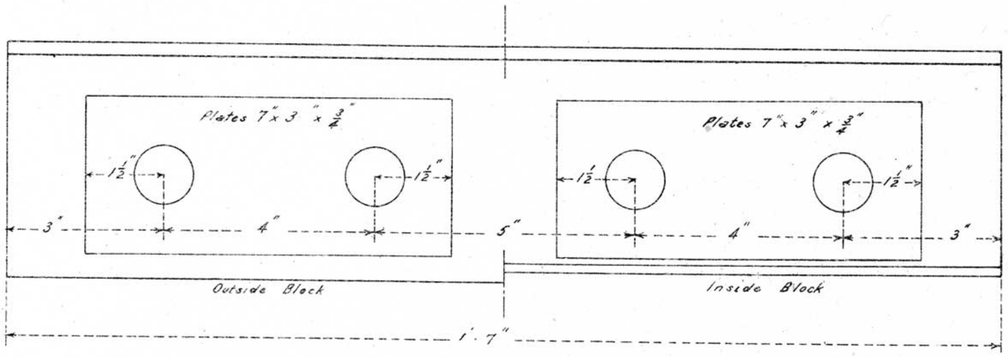

SIDE ELEVATION

220.12

H40

L.311/23

Standard Blocks for Insulated Joints
66 lb "F" Class Rails

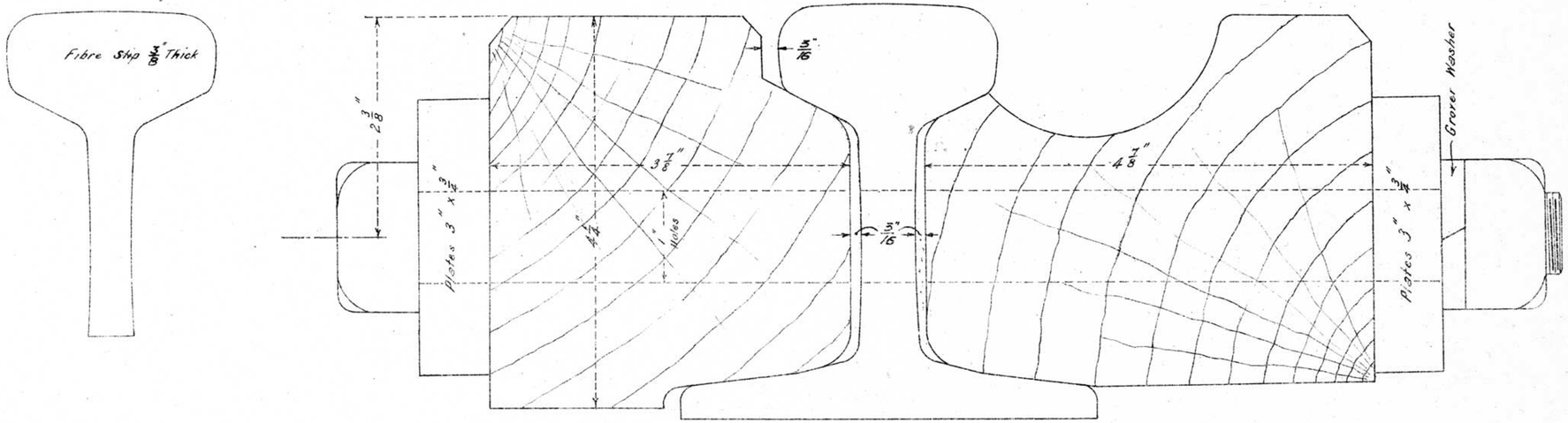

Cross Section

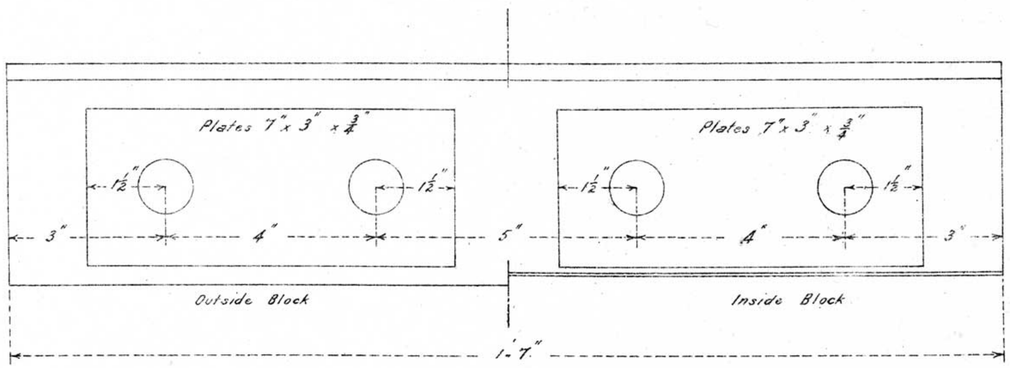

Side Elevation

Note.
Blocks to be of selected Ironbark or Grey Box

L.313/23

H41

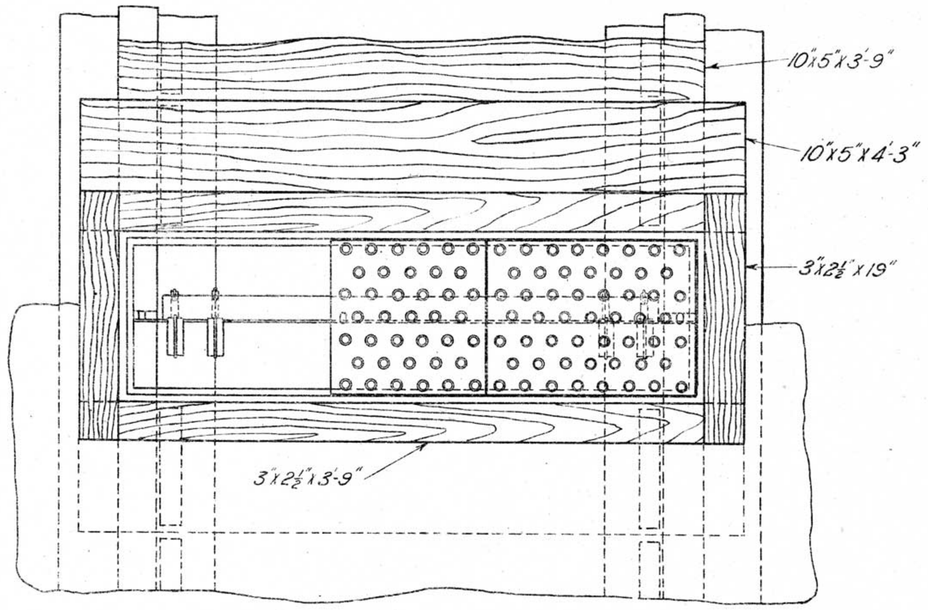

Quantities to be ordered as required.

Name	Mat.	12 Leads.	8 Leads.
Concrete Trunking	Reinf. Conc.	12 or 13K97	12 or 13K97.
Inspection Chamber	C.S.	1A311	2A311
Covers 2 per Insp. Chamber	"	6K98	6K98
1 " " "	"	2K98	–
Angle-iron Support	M.S.	6A286	7A286
Inspection Chamber Timbers.	Hd. Wd.	10"x5"x4'-3"	10"x5"x3'-3½"
Intermediate Timbers	"	10"x5"x3'-9"	10"x5"x2'-9"
Inspection Chamber Collar	"	3"x2½"x19"	3"x2½"x19"
		3"x2½"x3'-9"	3"x2½"x2'-9½"
Cleats - 2 off for each Timber	"	1½"x1"x9"	1½"x1"x9"

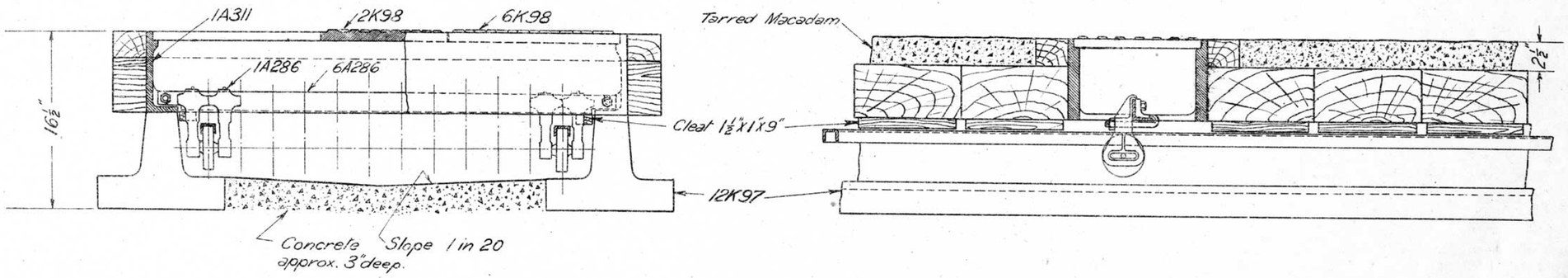

Shewn for 12 Leads.

L.310/23

VICTORIAN RAILWAYS

CONCRETE TRUNKING

Typical Assembly

2-8-22

Chief Engr. Strs. & Tels.	Drawn by R.G.C.	Traced by R.G.C.

H210

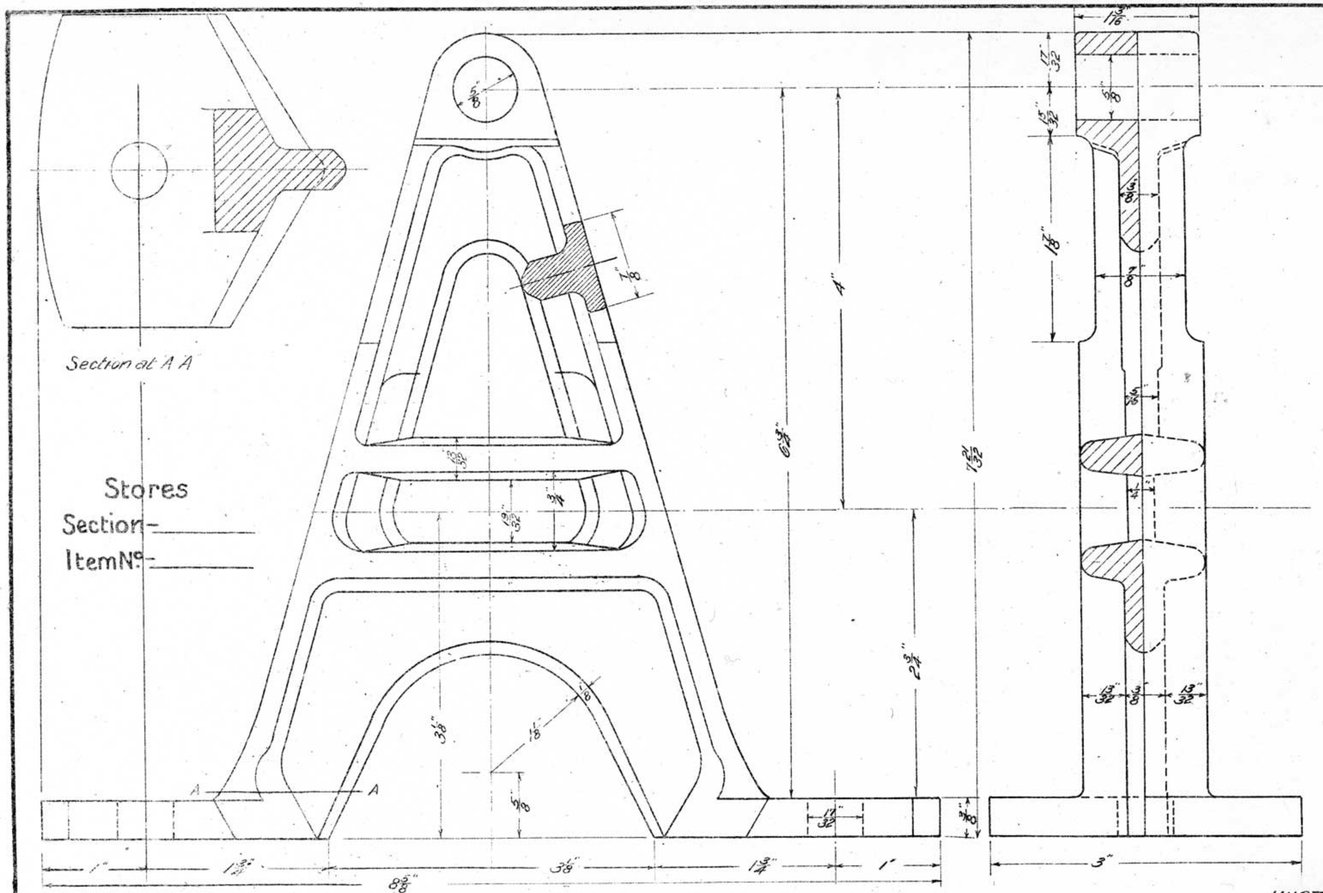
Section at A A
Stores
Section –
Item Nº –
A
A
1"
1 3/32"
8 7/8"
3 3/8"
1 3/4"
1"
3"
1 3/16"
5/32"
5/32"
18"
3/8"
5/32"
5/32"
5/32"
3/8"
5/32"
5/32"
1 3/32"
5/8"
3/16"
3/8"
3/8"
3/8

NOTE.
To be used for replacements only.
For all new work see Drawing F2232

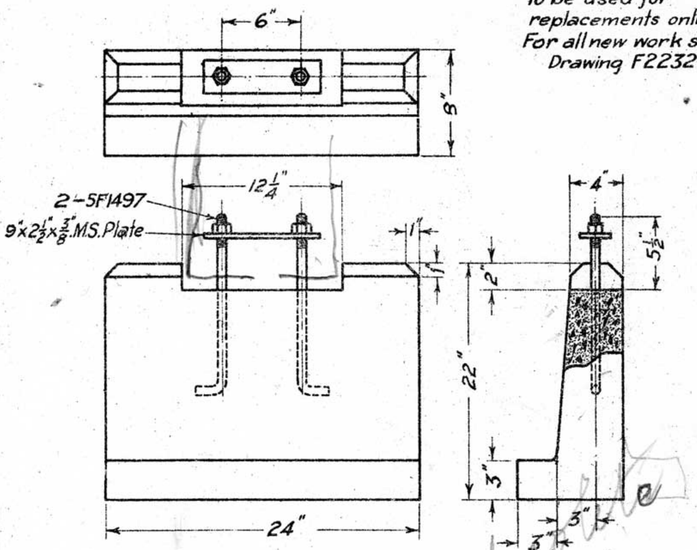

4-11-26
29-10-24 | Alt. No 86
12-1-22 | Alt. No 16

Concrete
END BLOCK

1H173

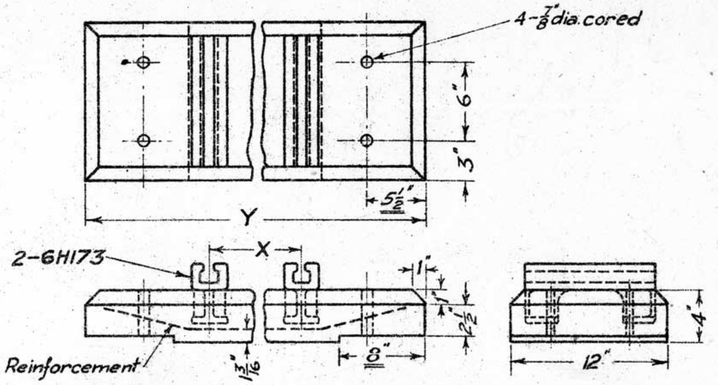

2H173 Crank Slab X = 7", Y = 3'-3"
3H173 Compensator Slab N.P. X = 2'-7 1/8", Y = 4'-5"
4H173 " " O.P. X = 17", Y = 3'-3"
5H173 Lever Slab X = 12 1/2", Y = 3'-3"

29-8-28 | Alt. No 204
4-11-26
21-6-26 | Alt. No 143
29-10-24 | Alt. No 86
10-7-23 | Alt. No 51
12-1-26 | Alt. No 16

Supplied with:- 4-3/4" Sq. Hd. Bolts, 2 1/2" long

Concrete
SLABS

5H173
4H173
3H173
2H173

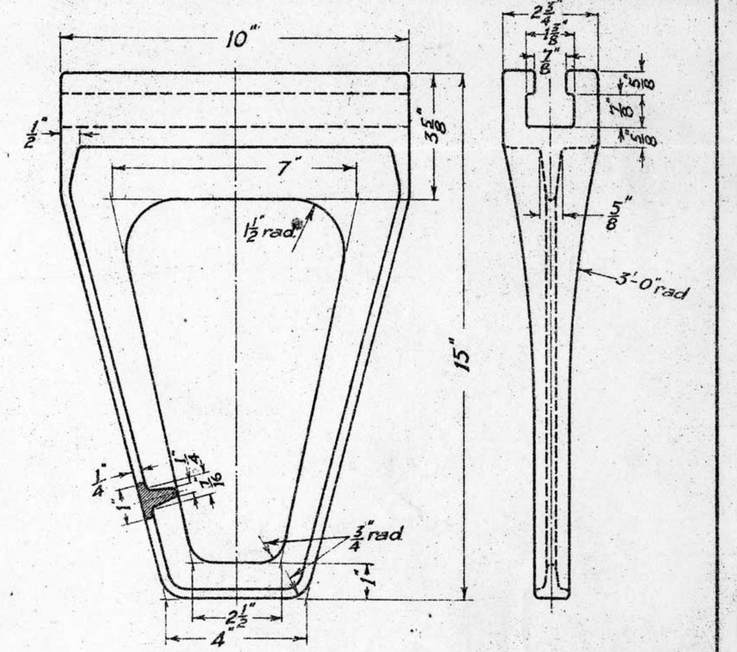

4-11-26

C.I.
ANCHOR POST

13H173

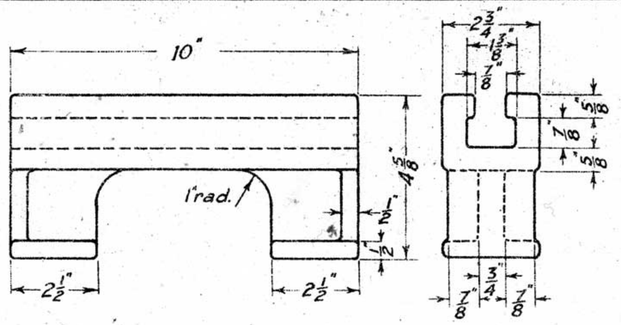

4-11-26

C.I.
ANCHOR POST

6H173

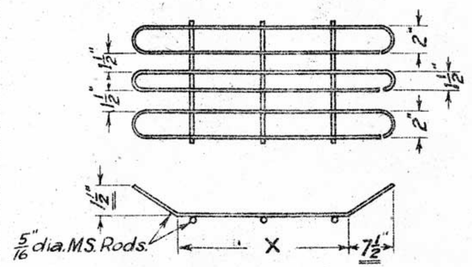

7H173 Crank Slab X = 1'-9"
8H173 Compensator Slab N.P. X = 2'-11"
9H173 " " O.P. X = 1'-9"
10H173 Lever Slab X = 1'-9"

7H173 & 8H173 now made of BRC Fabric Ref No 11 instead of M.S.

29-8-28 | Alt. No 204
4-11-26
29-10-24 | Alt. No 86
10-7-23 | Alt. No 51
12-1-22 | Alt. No 16

M.S.
REINFORCEMENT

10H173
9H173
8H173
7H173

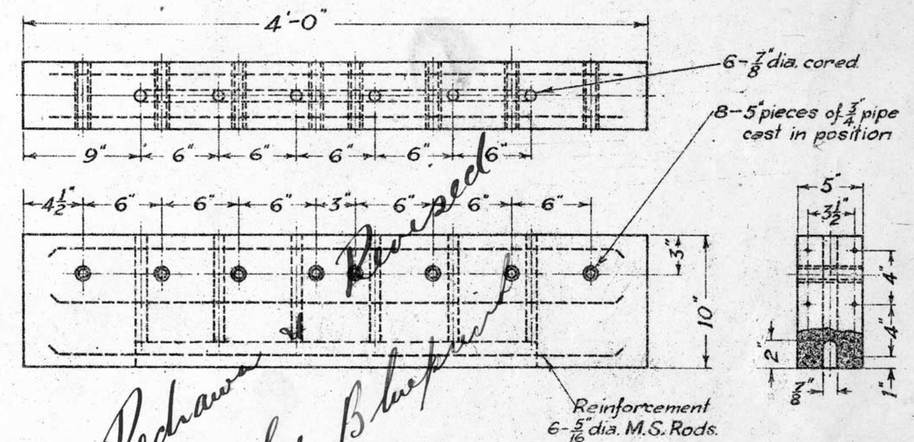

Redrawn & Revised
See Blueprint

4-11-26
17-8-26 | Alt. No 150

Concrete
BEARERS

12H173

Drawing has been Revised

Redrawn including Alterations No 16 51, 86, 143 & 150. Part No 11H173 transferred to Part No 5F1497. Part No 13H173 added.
Original title "Concrete Slab Foundations, for Cranks, Compensators & Point Levers." dated 10-8-21.

VICTORIAN RAILWAYS
CONCRETE FOUNDATIONS
AND ANCHOR POSTS
FOR CRANKS ETC.
4-11-26

Chief Eng. Sigs. & Tels.	Drawn by L.J.P.	Traced by L.J.P.

H173

Stores
Section
Item Nº

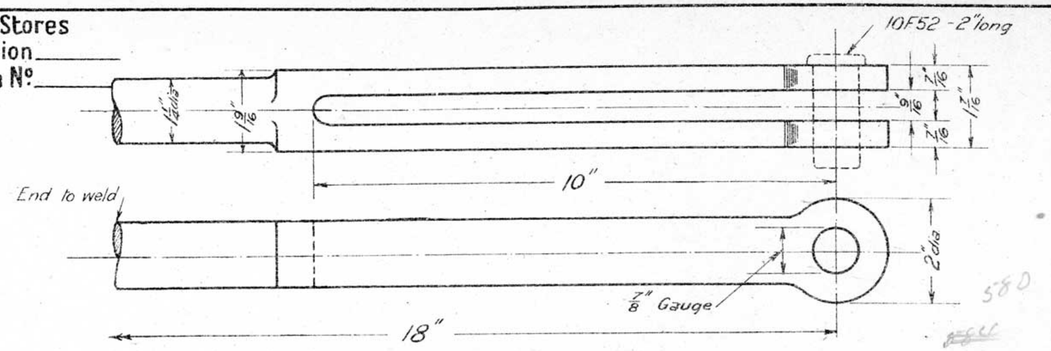

11-7-23 — Ford's Lever Jaw — 1H186

Stores
Section
Item Nº

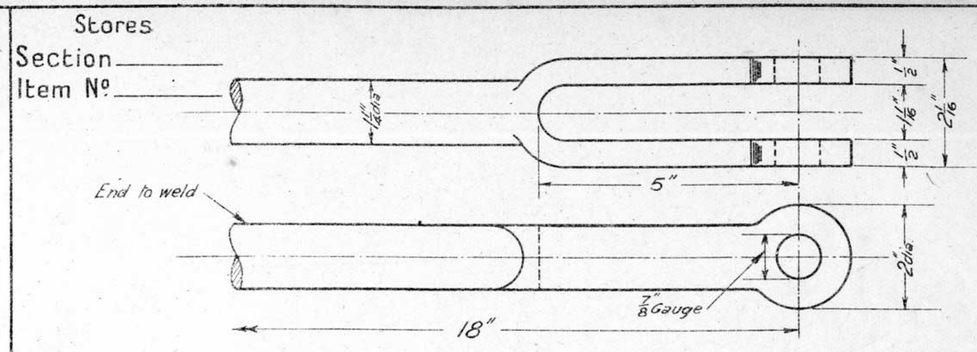

11-7-23 — Escapement Crank Jaw (Narrow) — 4H186

Stores
Section
Item Nº

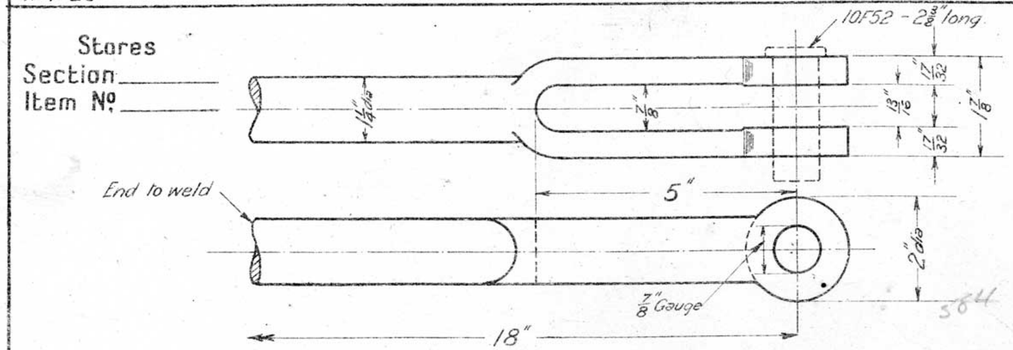

11-7-23 — Long Jaw — 2H186

Stores
Section
Item Nº

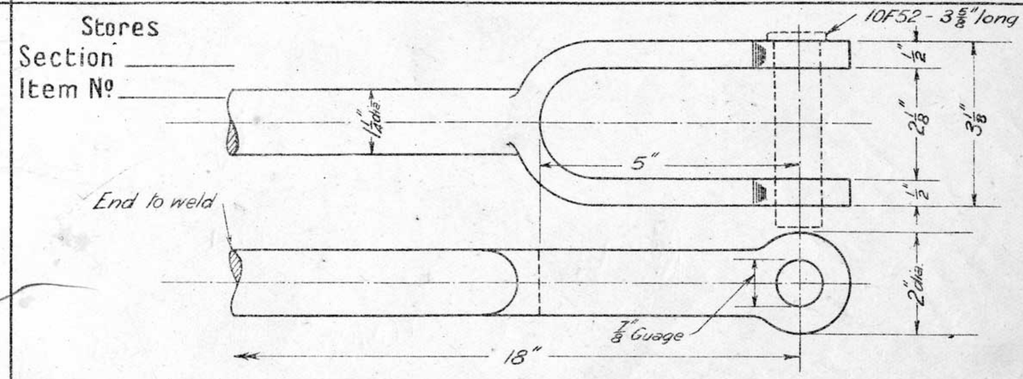

11-7-23 — Escapement Crank Jaw (Wide) — 5H186

Stores
Section
Item Nº

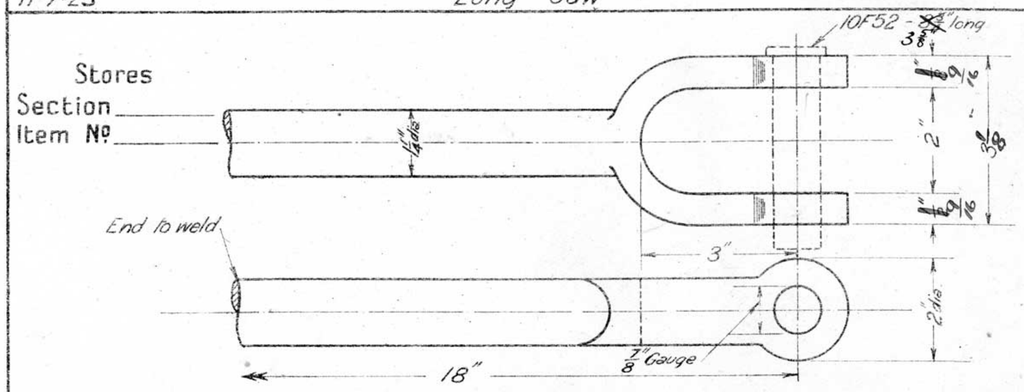

11-7-23 — Wide Jaw — 3H186

Stores
Section
Item Nº

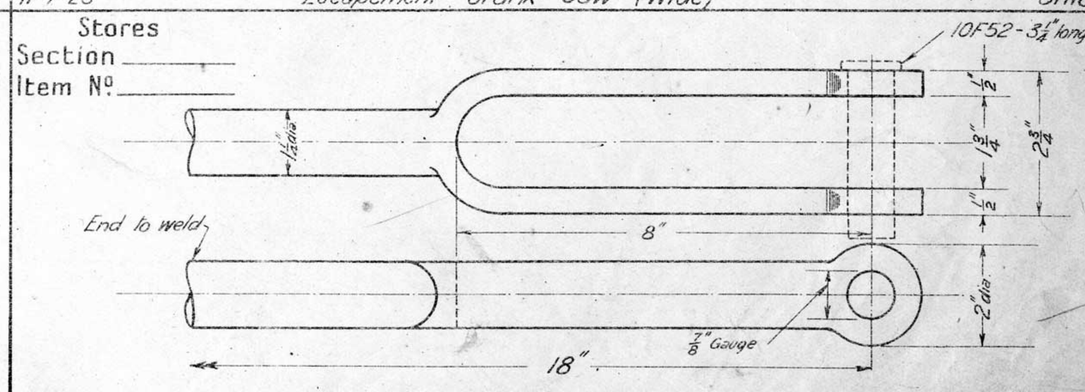

11-7-23 — Spur Lever Jaw — 6H186

VICTORIAN RAILWAYS

1 1/4" SOLID JAWS
Special

11-7-23

Chief Engr of Sigs & Tels	Drawn by	Traced by
	R.G.C.	R.G.C.

H186

L.281/23.

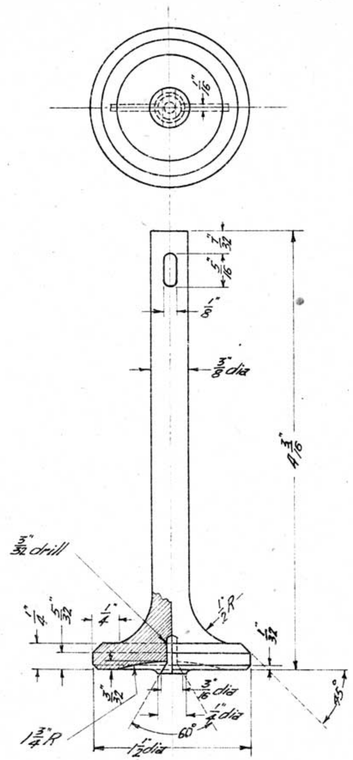

Valve Steel

28-3-22 **Valve** 1H188

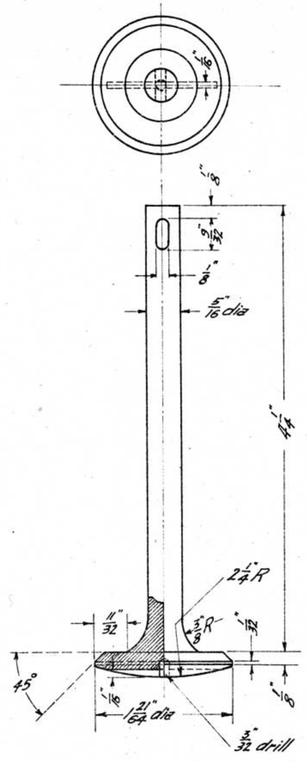

Valve Steel

28-3-22 **Valve** 2H188

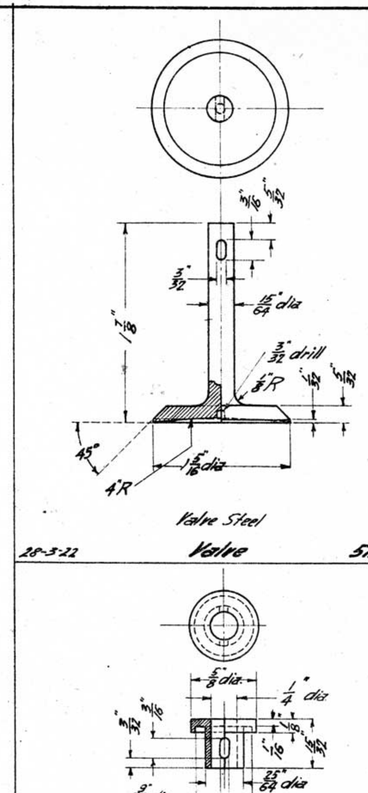

Valve Steel

28-3-22 **Valve** 5H188

M.S. Case hardened

28-3-22 **Spring Collar** (for 5H188) 6H188

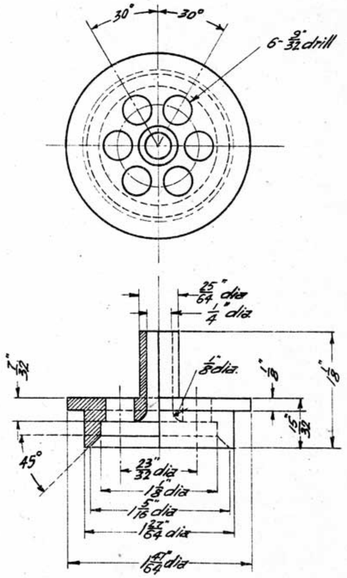

M.S.

28-3-22 **Valve Seating** (for 5H188) 8H188

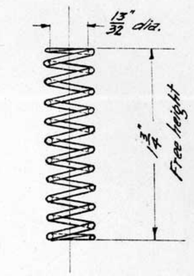

10 Convolutions
No. 16 S.W.G.

Spring Steel

28-3-22 **Spring** (for 5H188) 10H188

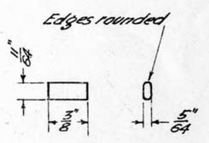

M.S.

28-3-22 **Cotter Pin** (for 5H188) 11H188

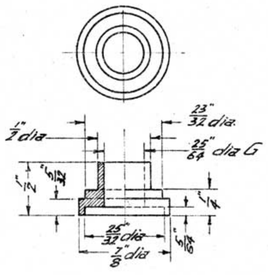

M.S.

28-3-22 **Spring Collar** (for 1H188) 3H188

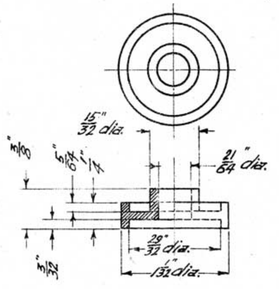

M.S.

28-3-22 **Spring Collar** (for 2H188) 4H188

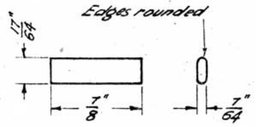

M.S.

28-3-22 **Cotter Pin** (for 2H188) 7H188

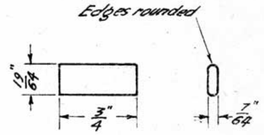

M.S.

28-3-22 **Cotter Pin** (for 1H188) 9H188

Stores
Section –
Item No. –

807-22

L312/23

VICTORIAN RAILWAYS
VALVES FOR MOTORS

28-3-22

Engineer of Signals	Drawn by F.J.W.	Traced by F.J.W.

H188

Stores
Section _____
Item No. _____

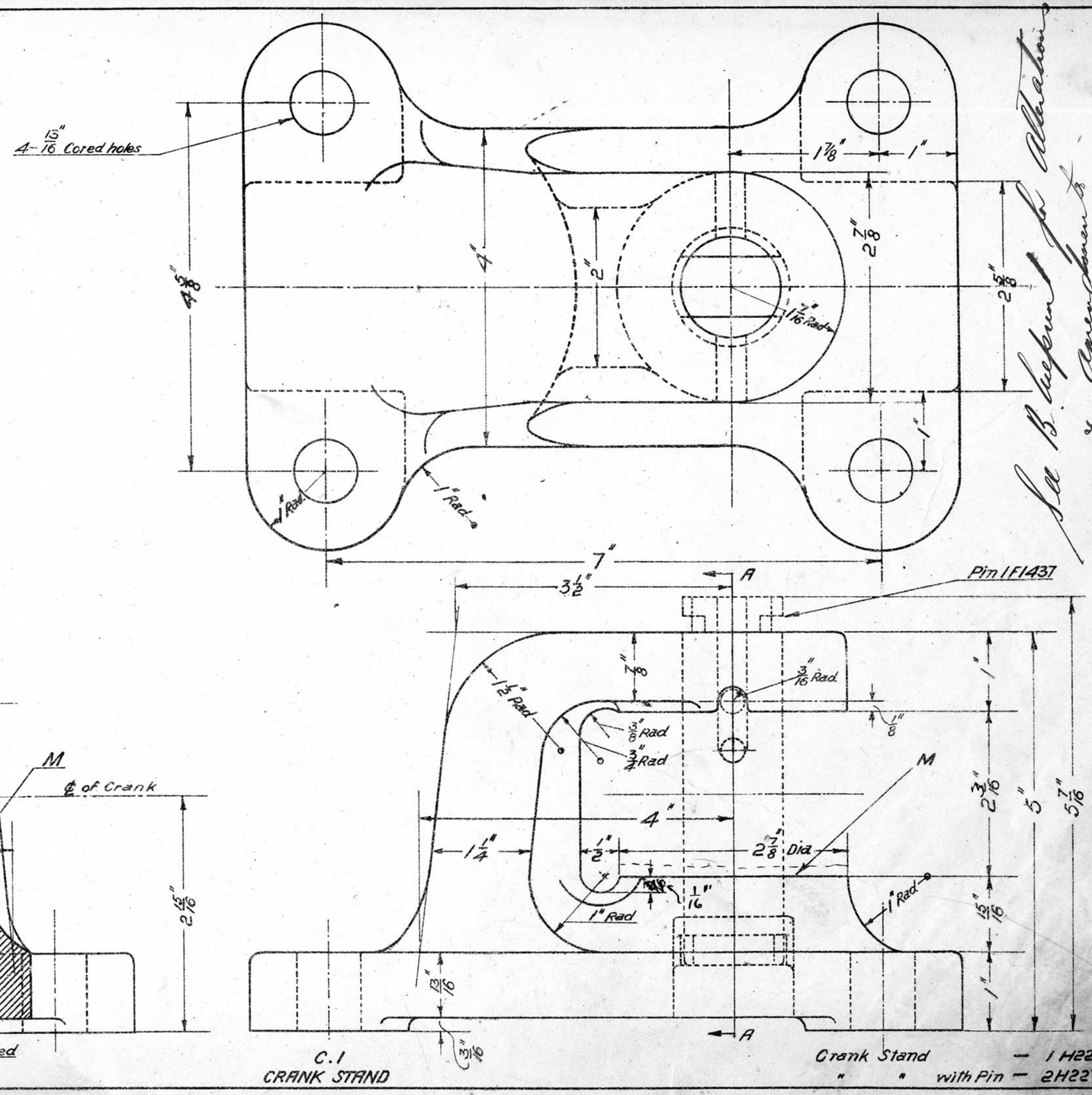
4-15/16" Cored holes
4 5/8"
4"
2"
1 7/8"
1"
2 7/8"
2 5/8"
1/16 Rad
1" Rad
1" Rad
7"
3 1/2"
A
Pin IF1437
1" Rad
1" Rad
1" Rad

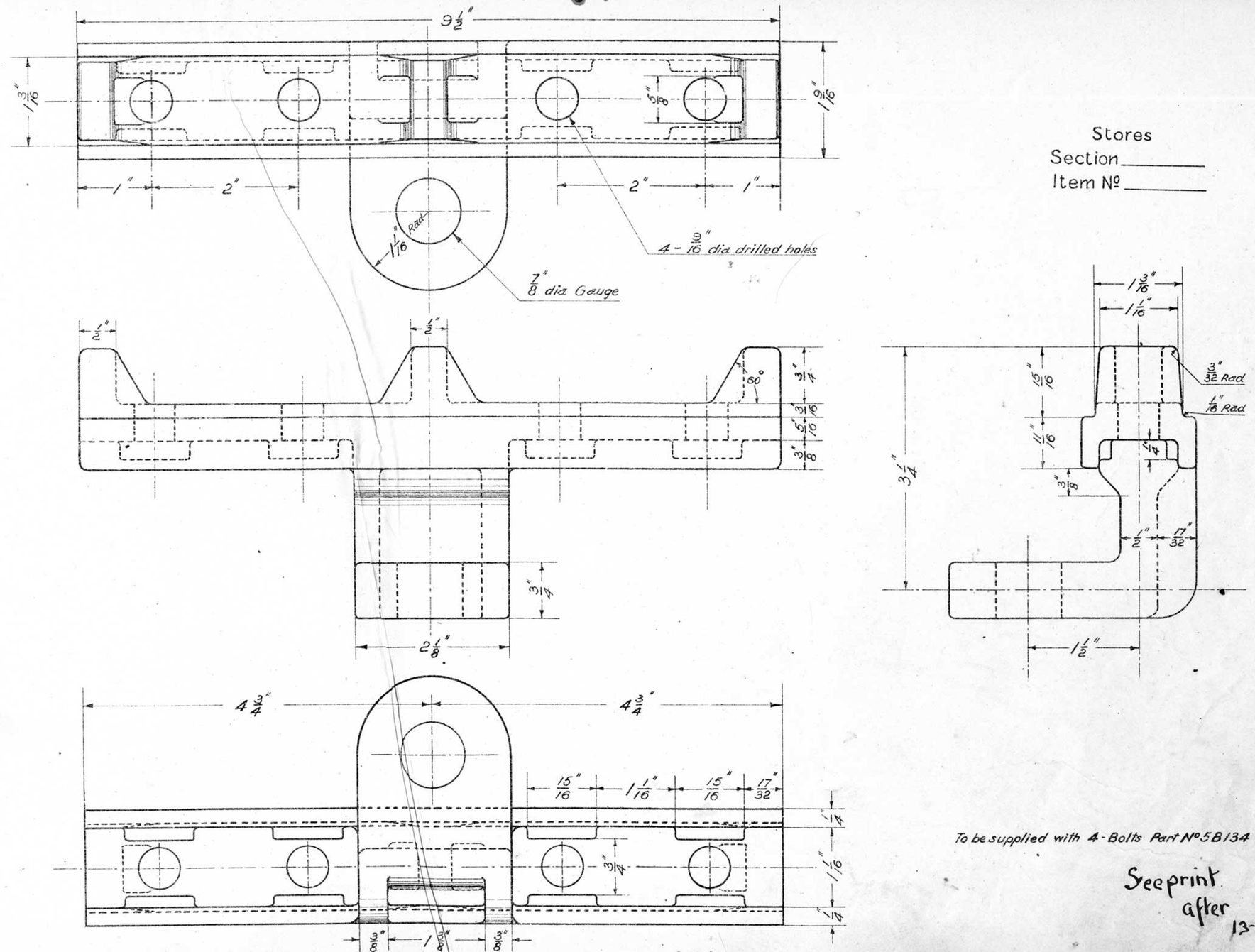

Stores
Section _____
Item No _____

To be supplied with 4-Bolts Part No 5B134 - X = 2 1/4"

See print after 13-2-25

M.1
DROP-OFF LUG

L 281/23.

1H242

H242

VICTORIAN RAILWAYS
DROP-OFF LUG
for
Channel Point Rodding
23-5-23

Chief Eng'r of Sig's & Teleg's
Drawn by C.E.W.
Traced by C.E.W.

H242

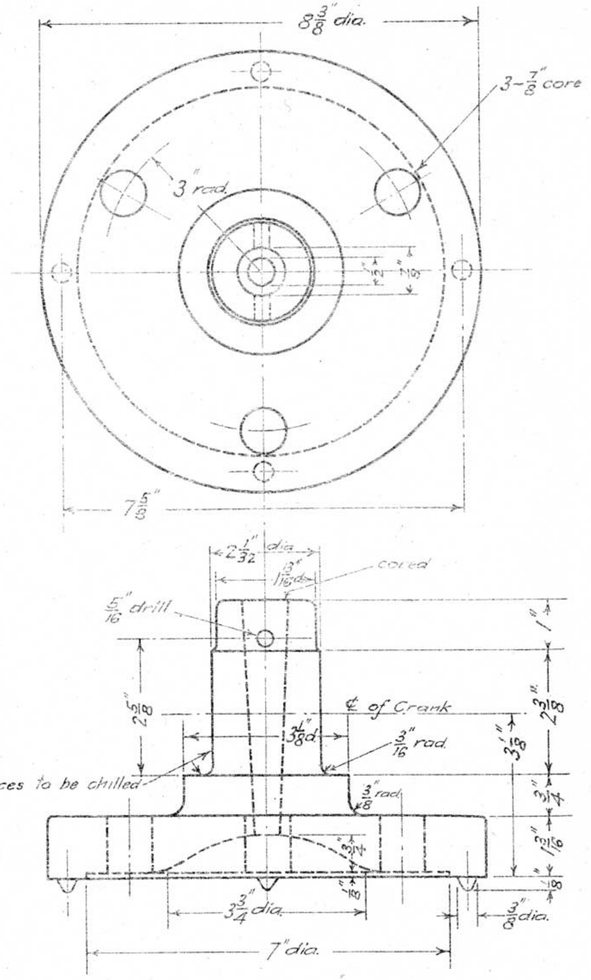

Stores
Section _____
Item No _____

To be supplied with 5/16" Split Pin 3" long

C.I.

6-9-23 Round Base Crank Stand 1H276

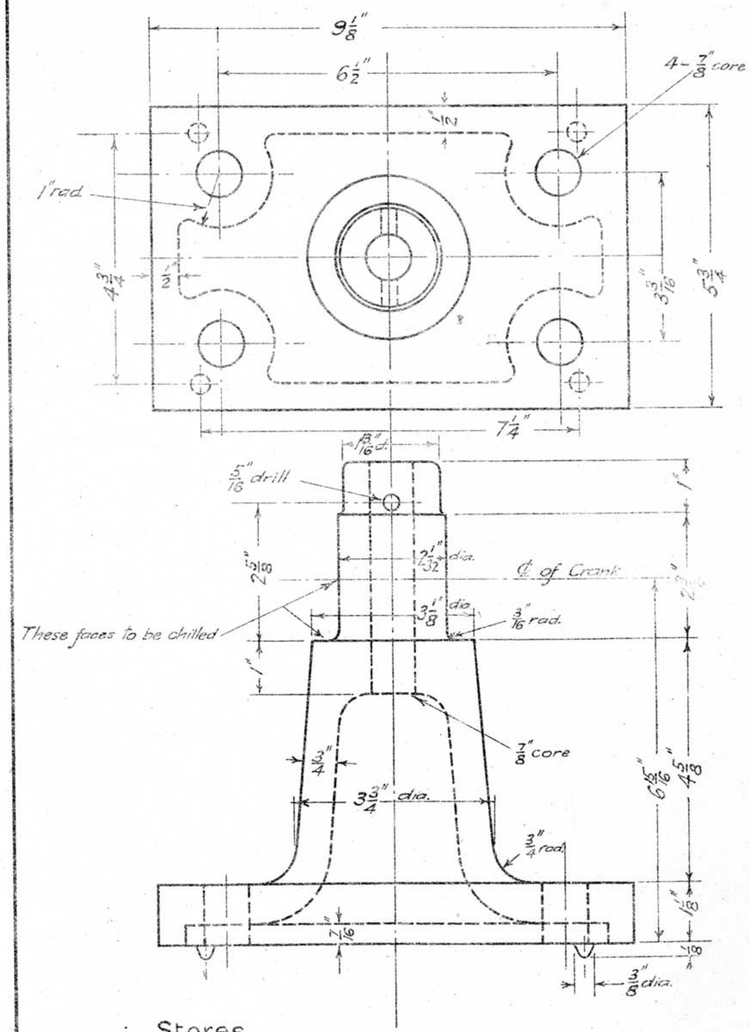

Stores
Section _____
Item No _____

To be supplied with 5/16" Split Pin 3" long

C.I.

6-9-23 High Accommodating Crank Stand 2H276

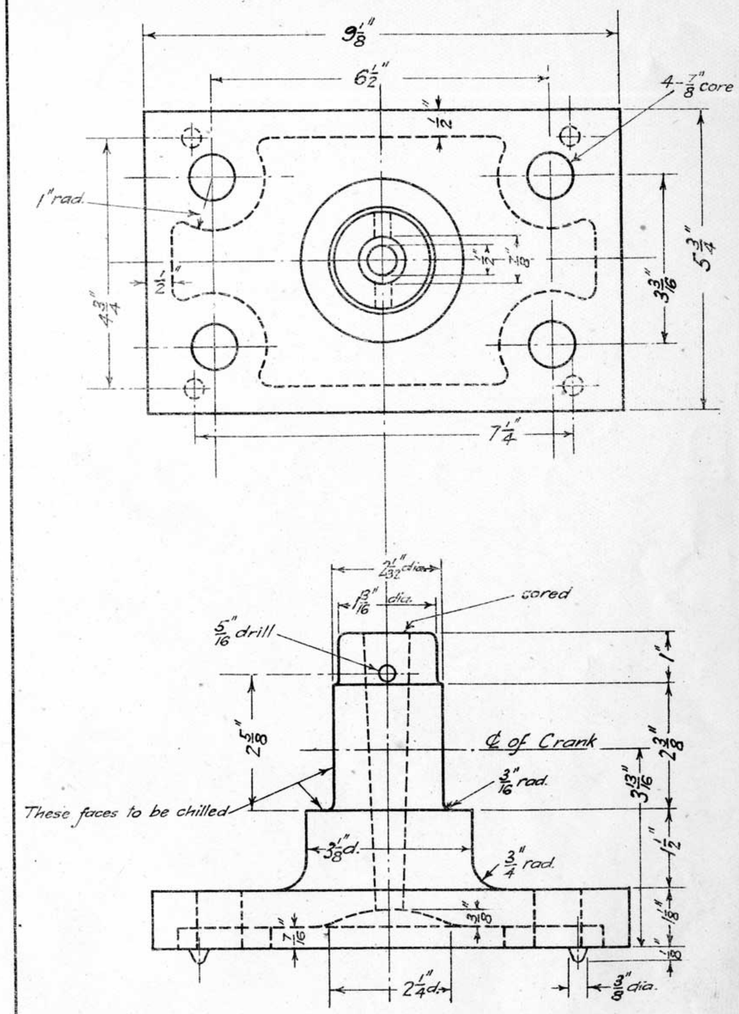

Stores
Section _____
Item No _____

To be supplied with 5/16" Split Pin 3" long

C.I.

6-9-23 Low Accommodating Crank Stand 3H276

L.281/23.

VICTORIAN RAILWAYS
CRANK STANDS
ONE-WAY HORIZONTAL
ROUND BASE & ACCOMMODATING
6-9-23

Chief Engr of Sigs & Tels.	Drawn by	Traced by
	S.C.O.	S.C.O.

H 276

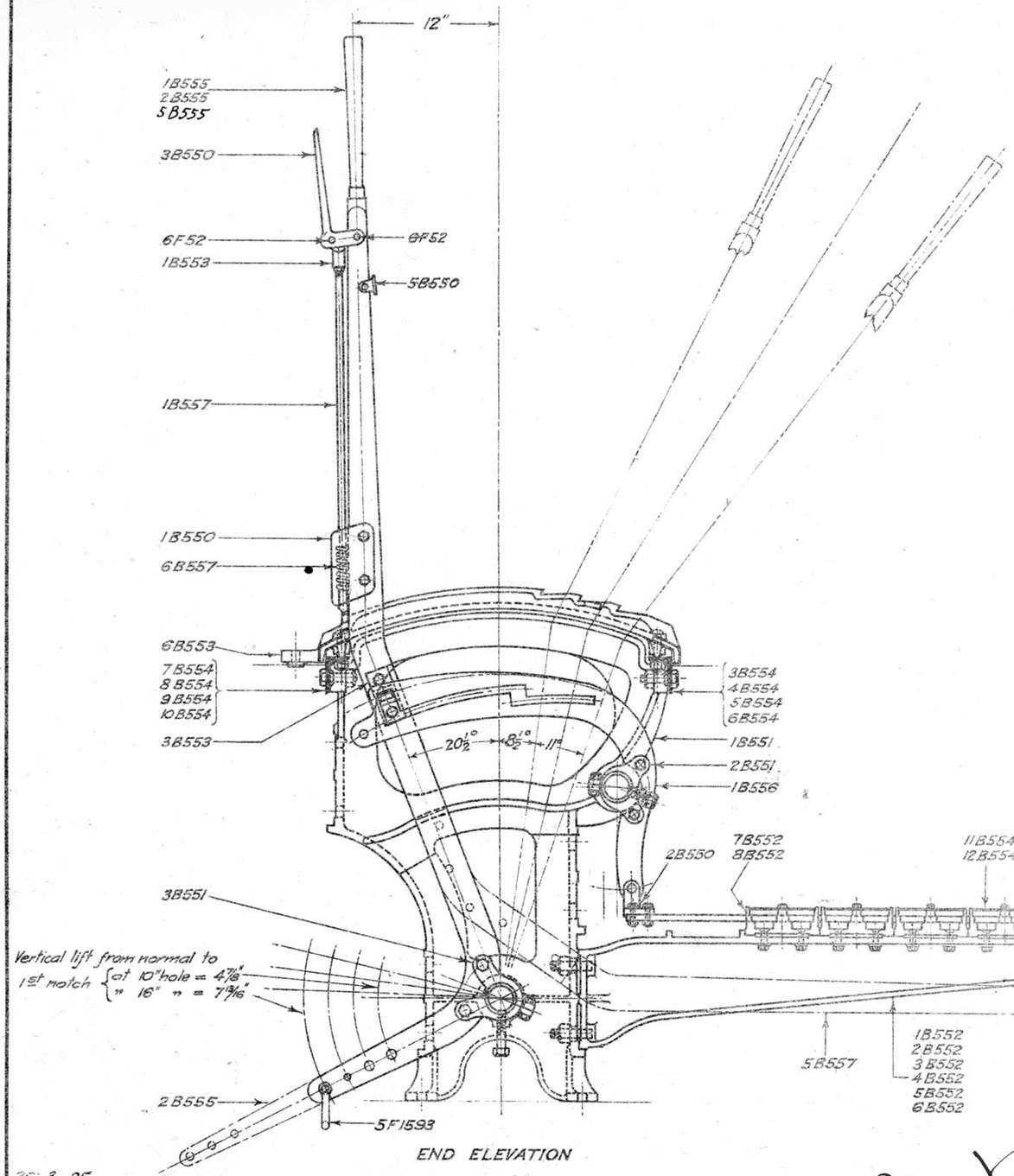

END ELEVATION

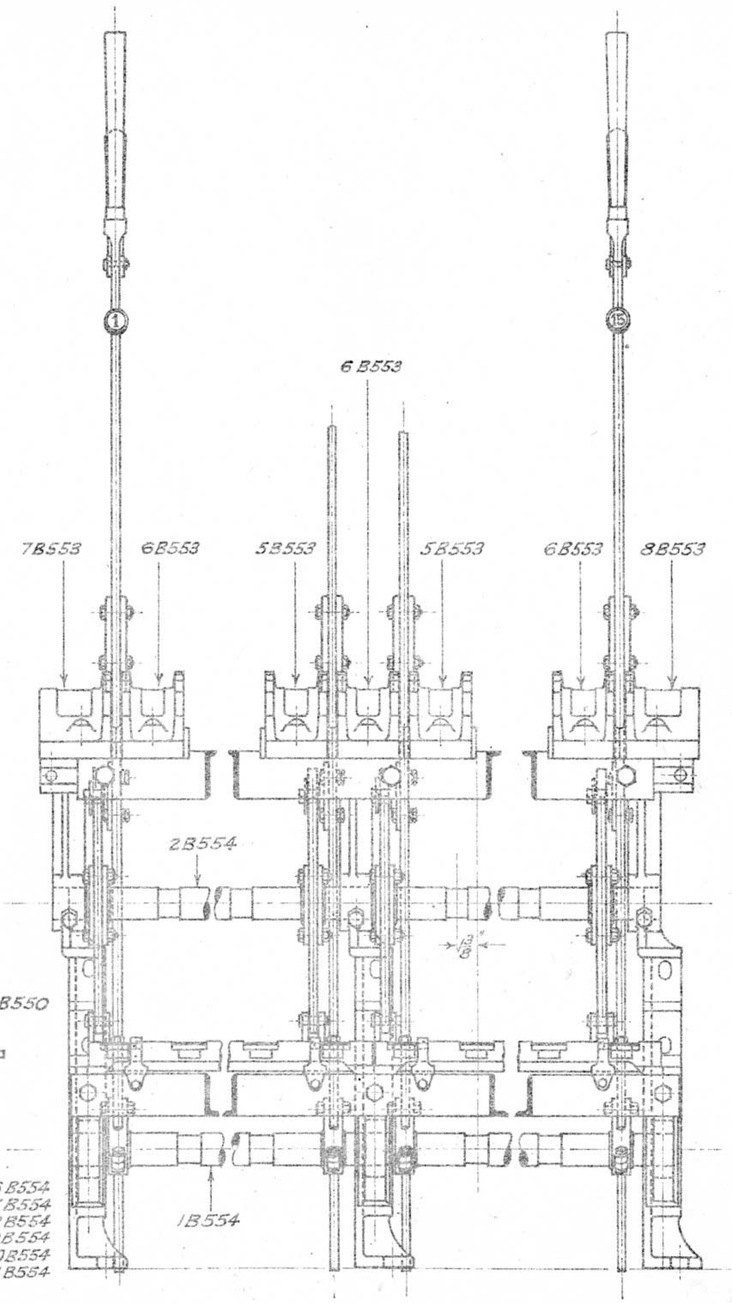

FRONT ELEVATION

26-3-25

Refer to Blue Prints for alterations

For Material List see Drawing A391

VICTORIAN RAILWAYS

MECHANICAL INTERLOCKING APPARATUS

TYPE "A" CAM & TAPPET ASSEMBLY

26-3-25

Chief Eng. or Sigs. & Tels.	Drawn by	Traced by
	F.W.H.	K.C.H.C.

H333

L.91/25

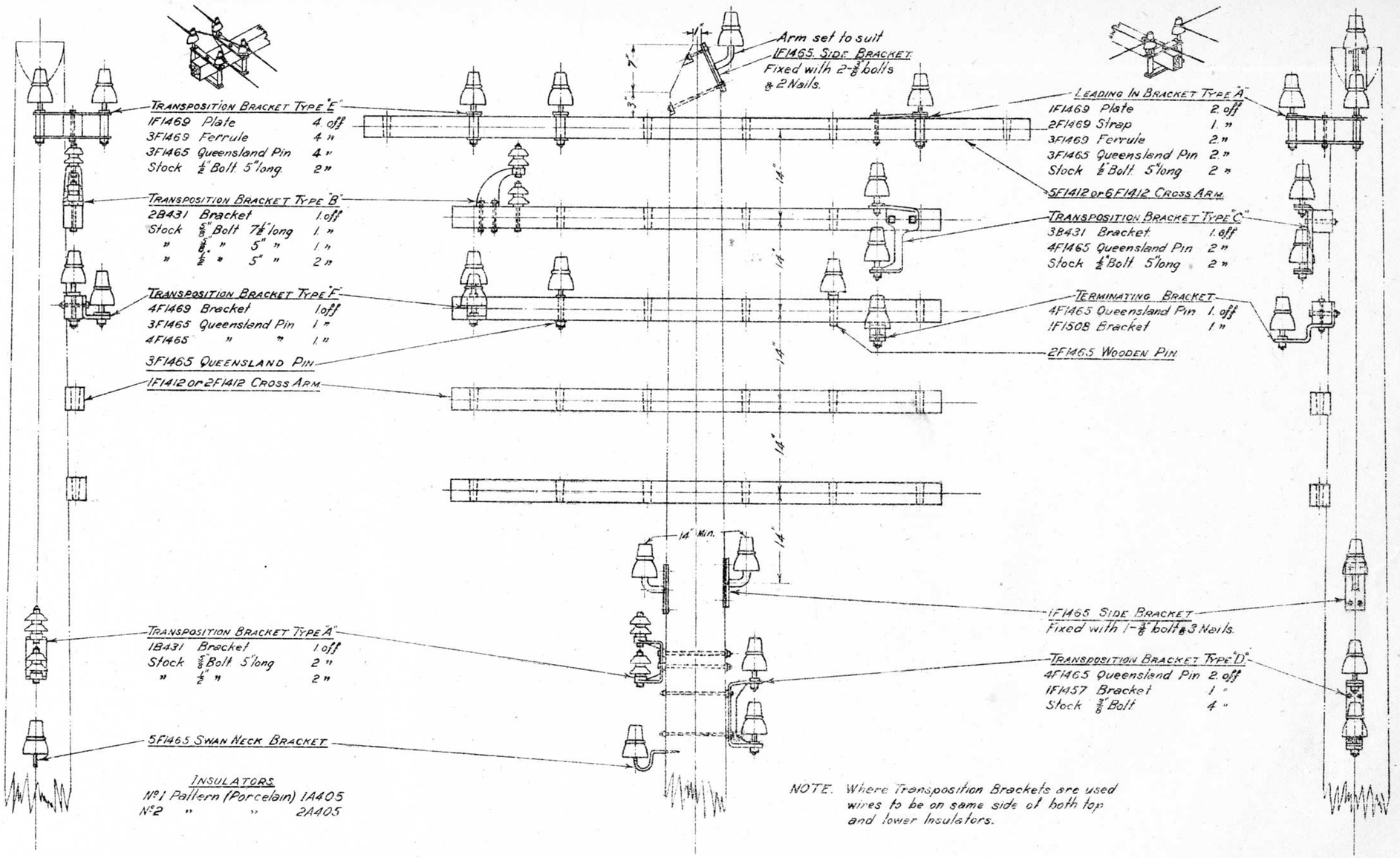

5-5-25

This Drawing Supersedes Drawings F1463 & F1816.

VICTORIAN RAILWAYS

TELEGRAPH LINE FITTINGS ASSEMBLY

(shown on Wedge Topped Timber Pole)

5-5-25

Chief Eng. of Sigs. & Tels.	Drawn by	Traced by
	L.J.P.	L.J.P.

H359

L83/27

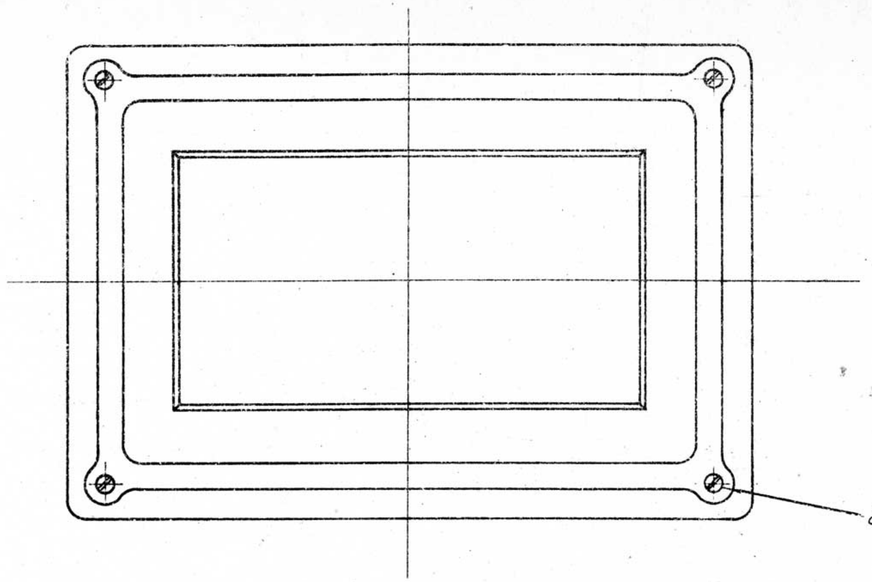

TELEPHONE SWITCH BOX 1H411

No.	Name	Mat'l	Quant.
1B635	Base	Alumin.m	1.
2B635	Cover	"	1.
3B635	Terminal Strip	Bl.wood	1.
※ 4B635	Baseboard	"	1
2F202	Terminal	Brass	4
8F202	"	"	12
Stock	⅛" Whit Screw ⅝" long C'sk Head.	M.S.	4
Stock	" " ⅝" " R'hd "	"	4

※ Note :- Fittings required on Baseboard 4B635 to be ordered separately.

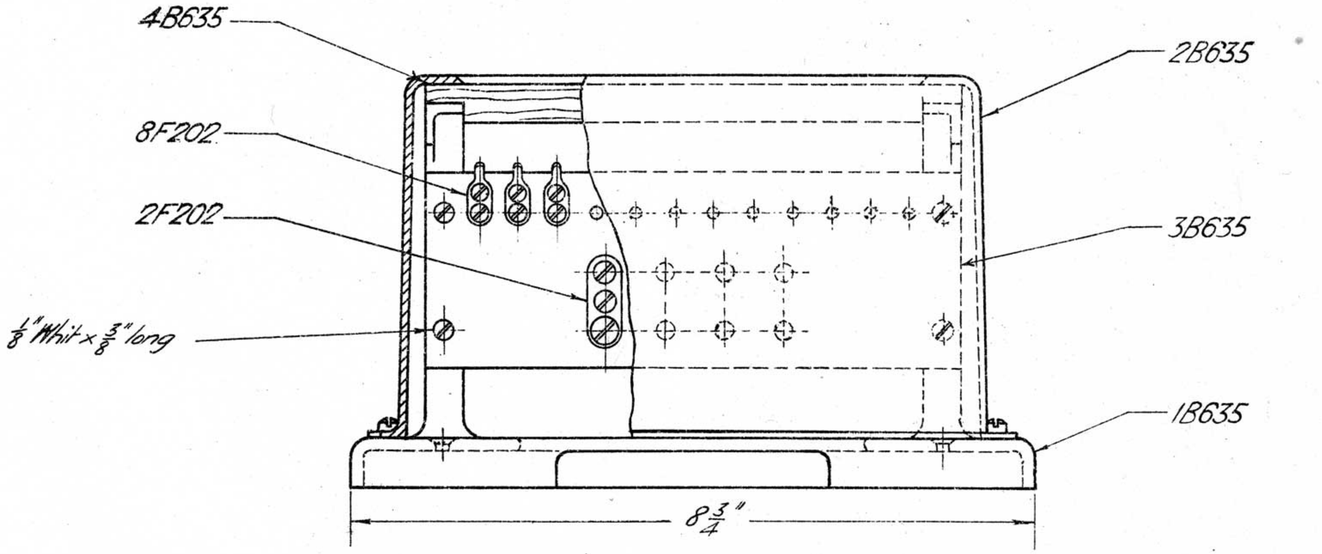

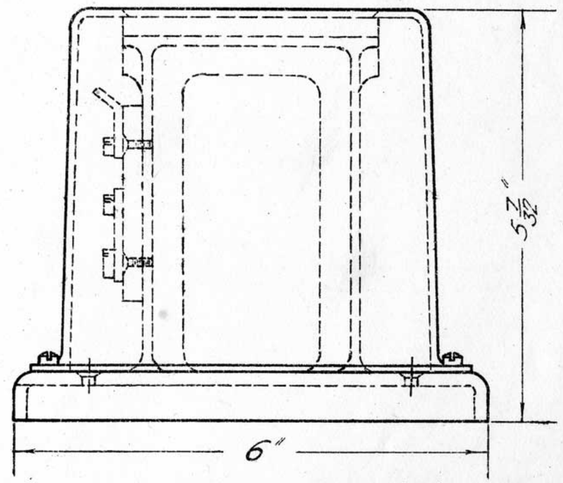

See Note.

Telephone Switch Box only 1H411

VICTORIAN RAILWAYS

TELEPHONE SWITCH BOX Assembly 22-11-26

Chief Engr. Sigs & Tels	Drawn by W.J.K.	Traced by W.J.K.

H411

L.162/27

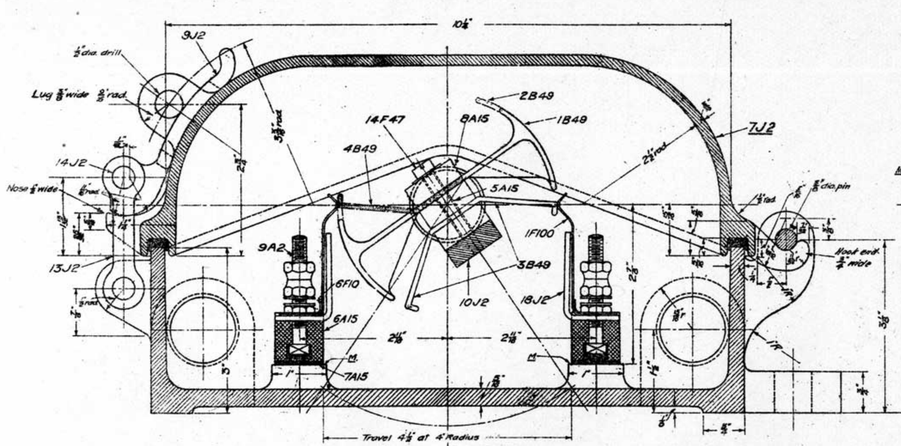

SECTIONAL ELEVATION

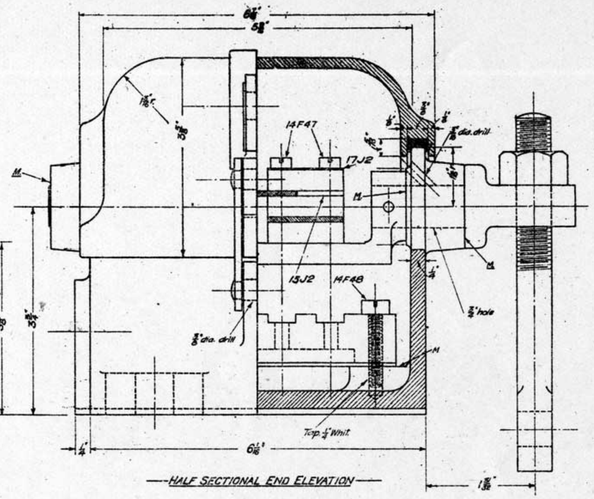

HALF SECTIONAL END ELEVATION

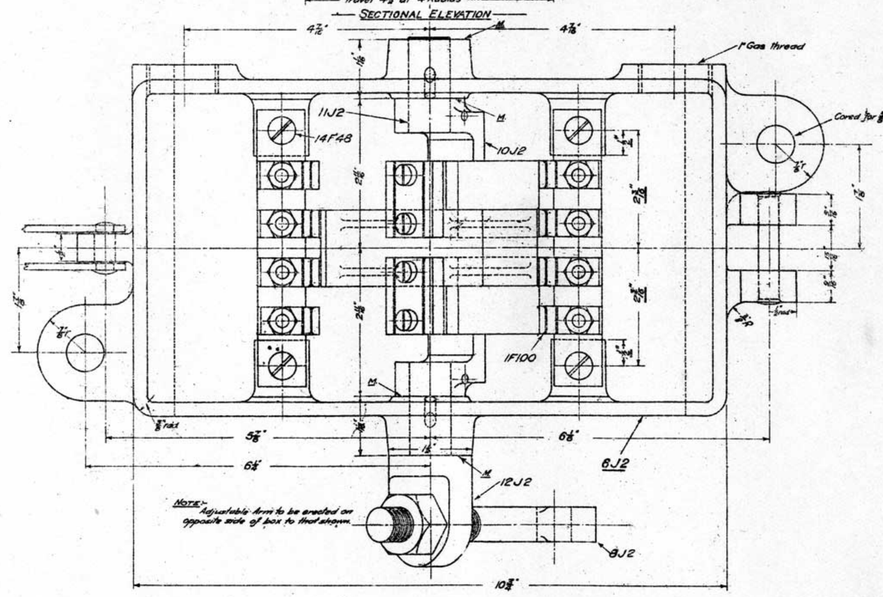

PLAN WITH COVER REMOVED

Stores
Section _____
Item No _____

LIST OF PARTS

TYPE OF BOX	CIRCUIT ARRANGEMENT
1J2	2 Normal 2 Reverse Half Stroke Short-circuiting
2 "	2 " 2 " Full " "
3 "	2 " 2 " No Short-Circuiting
4 "	3 " 1 " " "
5 "	4 " " "

Part No	NAME OF PART	MATERIAL	QUANTITY J2			
			1	2	3	4	5
6J2	Box	C.I.	1	1	1	1	1
7 "	Cover	"	1	1	1	1	1
8 "	Adjustable Arm	W.I.	1	1	1	1	1
9 "	Hasp	"	1	1	1	1	1
10 "	Striker Carrier	Brass	1	1	1	1	1
11 "	" " Bearing Pin	M.S.	1	1	1	1	1
12 "	Arm Carrier	W.I.	1	1	1	1	1
13 "	Shakle	M.S.	2	2	2	2	2
14 "	" Rivet	"	2	2	2	2	2
15 "	Distance Piece small	Brass	2	2	-	-	-
16 "	" " large	"	-	-	2	1	-
17 "	Binding Piece	"	2	2	2	2	2
18 "	Contact Spring Arrester	M.S.	8	8	8	8	8
5A15	Insulating Bush	Fibre	4	4	4	4	4
6 "	" Base	Fibre	2	2	2	2	2
7 "	" " Sole Plate	"	2	2	2	2	2
8 "	Striker Insulating Block	"	6	6	6	6	6
1B48	Short Circuiting Plate Half Stroke	Brass	1	-	-	-	-
2 "	" " " Full	"	-	1	-	-	-
3 "	Double Striker for Hand R. Contact	Hard Brass	2	2	2	1	-
4 "	Single " giving Nor. R. only	"	-	-	-	2	4
6F10	Contact Spring Keeper	Tinned Steel	8	8	8	8	8
14F47	Screws 2BA	Iron	4	4	4	4	4
14F48	" ¼ Whit	Iron	4	4	4	4	4
1F100	Contact Spring	Phos. Bron.	8	8	8	8	8
9A2	Binding Post	Brass	8	8	8	8	8
Stock	Gasket (about 2'-10" long)	Hemp	1	1	1	1	1
"	Nut ⅜" Whit	W.I.	1	1	1	1	1
"	Taper Pin ⅜" to be split	M.S.	2	2	2	2	2

* Recess in base to be filled with Compound when Binding Posts are in position.

POINT CONTACT BOX J2

798

Stores
Section _____
Item No _____

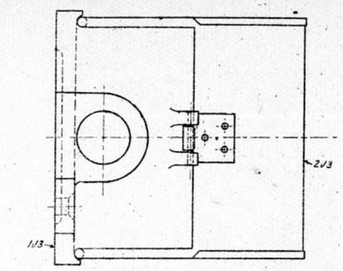

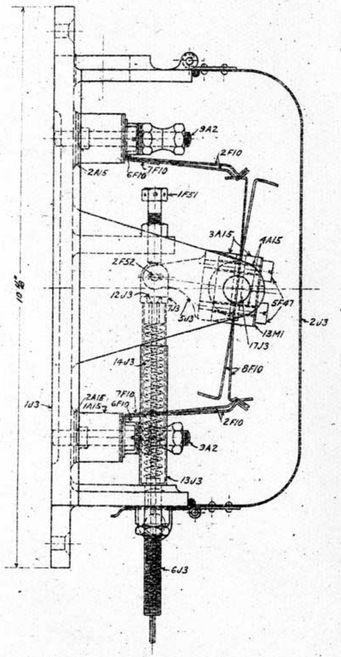

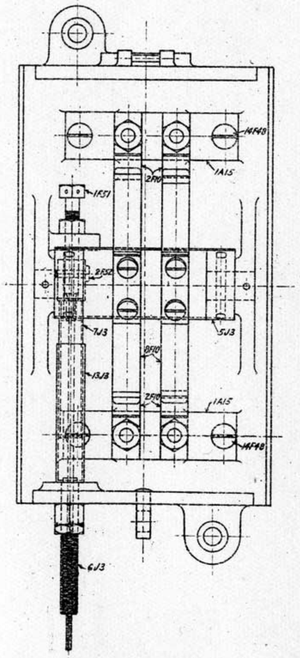

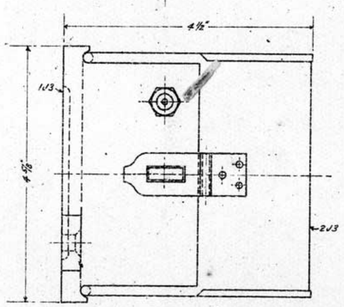

Latch Contact Box Complete - 20J3

Nº	Name	Material	Qnty
1J3	Base Casting	C.I.	1
2J3	Case (Complete)	Steel Iron	1
5J3	Contact Carrier	Mall. C.I.	1
6J3	Wire Adjusting Screw	Brass	1
7J3	Internal Ferrule & Coupling	"	1
12J3	Nipple	"	1
13J3	External Ferrule	" Tube	1
14J3	Spring	S.S.	1
17J3	Trunnion	M.S.	2
9A2	Binding Post Complete	Brass	4
1A15	Terminal Base	Imp. Bakelite	2
2A15	Terminal Base Side Plate	Canvas Bakelite	2
3A15	Insulating Block		2
4A15	Insulating Tubes	Branched Conduit	4
2F10	Contact Spring	Phos. Bronze	4
6F10	Contact Spring Keeper	"	4
7F10	Contact Spring Keeper	"	4
5F10	Coated Metal	Red bronze Cu.	2
5F47	Screw M3 B.A.	Brass	4
16F48	Screw ⅛" Mach.	M.S.	4
1F51	Screw ⅛" Mach. Hex. Head	"	1
2F32	Pin	"	1
13M1	Binding Strip	Brass	2
Stock	Taper Pin ⅜"x 1¼"	M.S.	2
"	Split Cotter ⅛"x 1"	"	1

1-10-18

Latch Contact Box Scale: Full size

20J3

Stores
Section _____
Item Nº _____

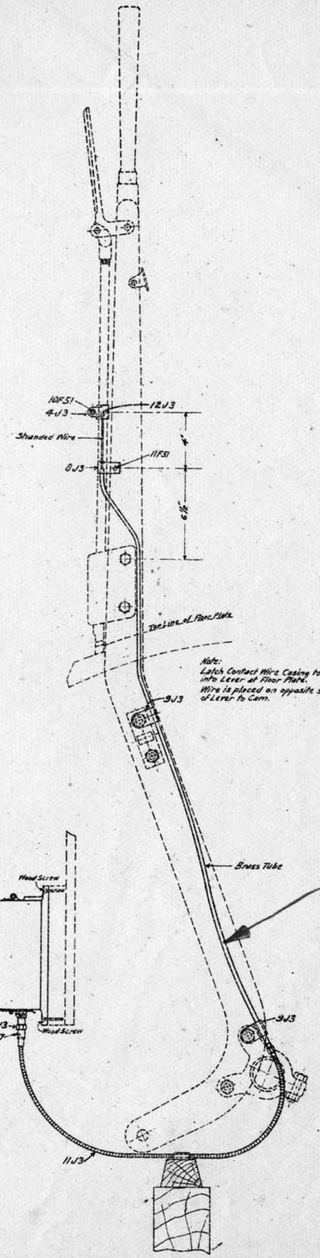

Bend taken out of Brass tube

Superseded by B736

Latch Contact Box and Fittings - 21J3

Nº	Name	Material	Qnty
20J3	Latch Contact Box		1
4J3	Latch Rod Clip	Brass	1
8J3	Lever Clip	"	1
9J3	Tube Clip	"	2
10J3	Adjusting Nut	"	1
11J3	Flexible Casing & Connections	Spr. & Brass	1
12J3	Nipple	Brass	1
10F57	Screw	M.S.	1
10F57	Screw	"	2J
10F107	Screw	"	1
Stock	7/22 Stic. Stranded Wire	Steel	
"	¼" Tube	Brass	7'-10½"
"	10 BA ⅜" Wood Screw Cut.	M.S.	2

Latch Contact Box and Fittings
General Assembly

21J3

1	Redrawn	1-10-18
	Material List revised and rearranged. Original Drawing J3 Sht 1 of 10-8-16.	

Reference
Details of Parts J3 Sheet 2.

1-10-18

VICTORIAN RAILWAYS
LATCH CONTACT BOX ASSEMBLY
1-10-18
Engineer of Signals

Drawn by AO
Traced by A.F.C.
Sheet 1 of 2 Sheets

J3

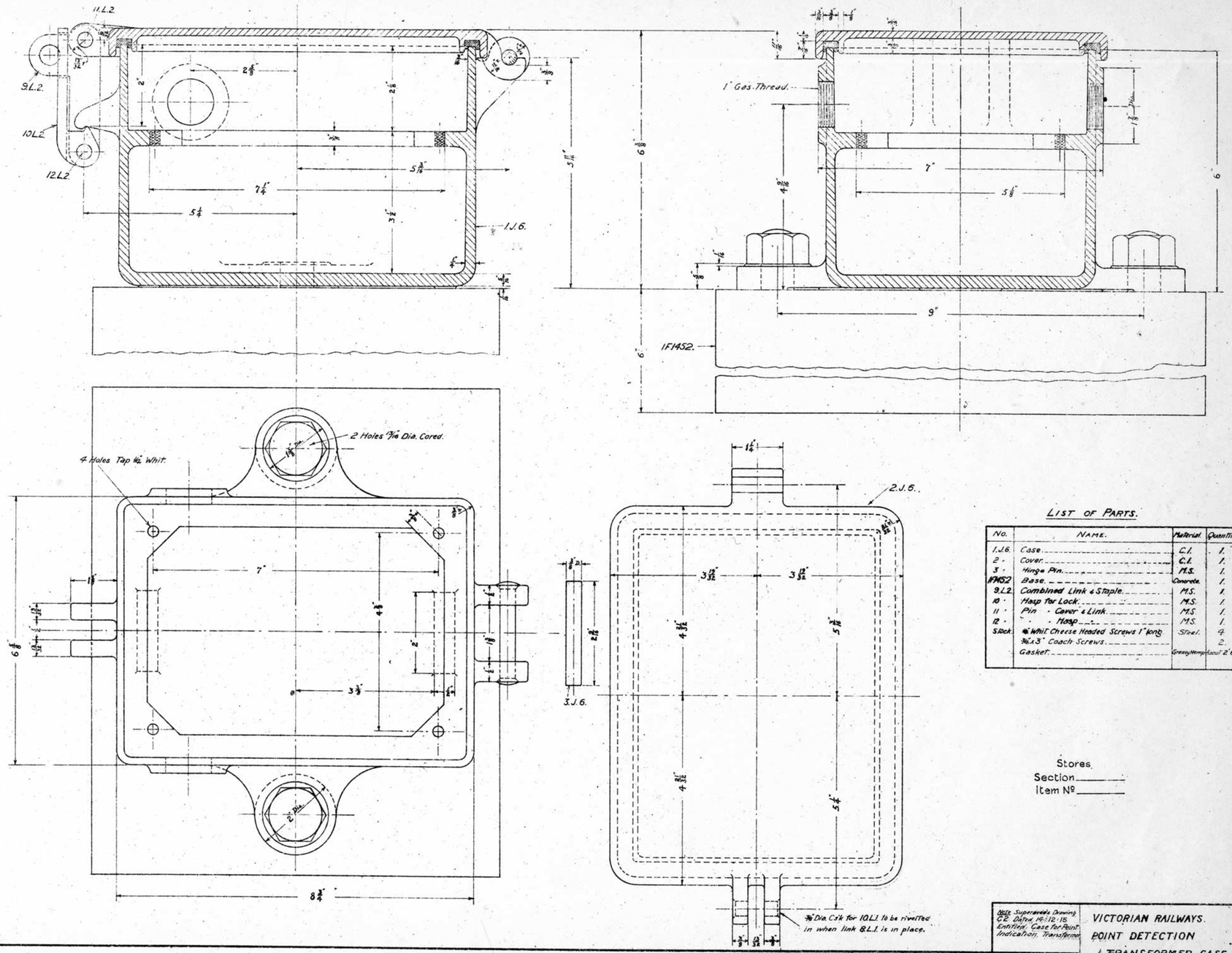

LIST OF PARTS.

No.	NAME.	Material.	Quantity.
1.J.6.	Case	C.I.	1.
2 "	Cover	C.I.	1.
3 "	Hinge Pin	M.S.	1.
1F1452	Base	Concrete.	1.
9.L.2.	Combined Link & Staple	M.S.	1.
10 "	Hasp for Lock	M.S.	1.
11 "	Pin " Cover & Link	M.S.	1.
12 "	" " Hasp	M.S.	1.
Stock.	1/4" Whit. Cheese Headed Screws 1" long.	Steel.	4
	3/16" x 3" Coach Screws		2.
	Gasket	Greasy Hemp	About 2' 6"

Stores
Section _____
Item No _____

Note Supersedes Drawing C2 Dated 14:12:15 Entitled Case for Point Indication Transformer

Reference 10.9.16 F.P. Layout K3.

Alteration No 38.

1 1-8-18. Outside lip of grease in cover (2.J.6) increased to 3/8" deep, formerly 5/16"

VICTORIAN RAILWAYS.
POINT DETECTION
TRANSFORMER CASE.

10.9.16.
Engineer of Signals.

Drawn by
Traced by W.J.V.
Checked by

J6.

I.182/25

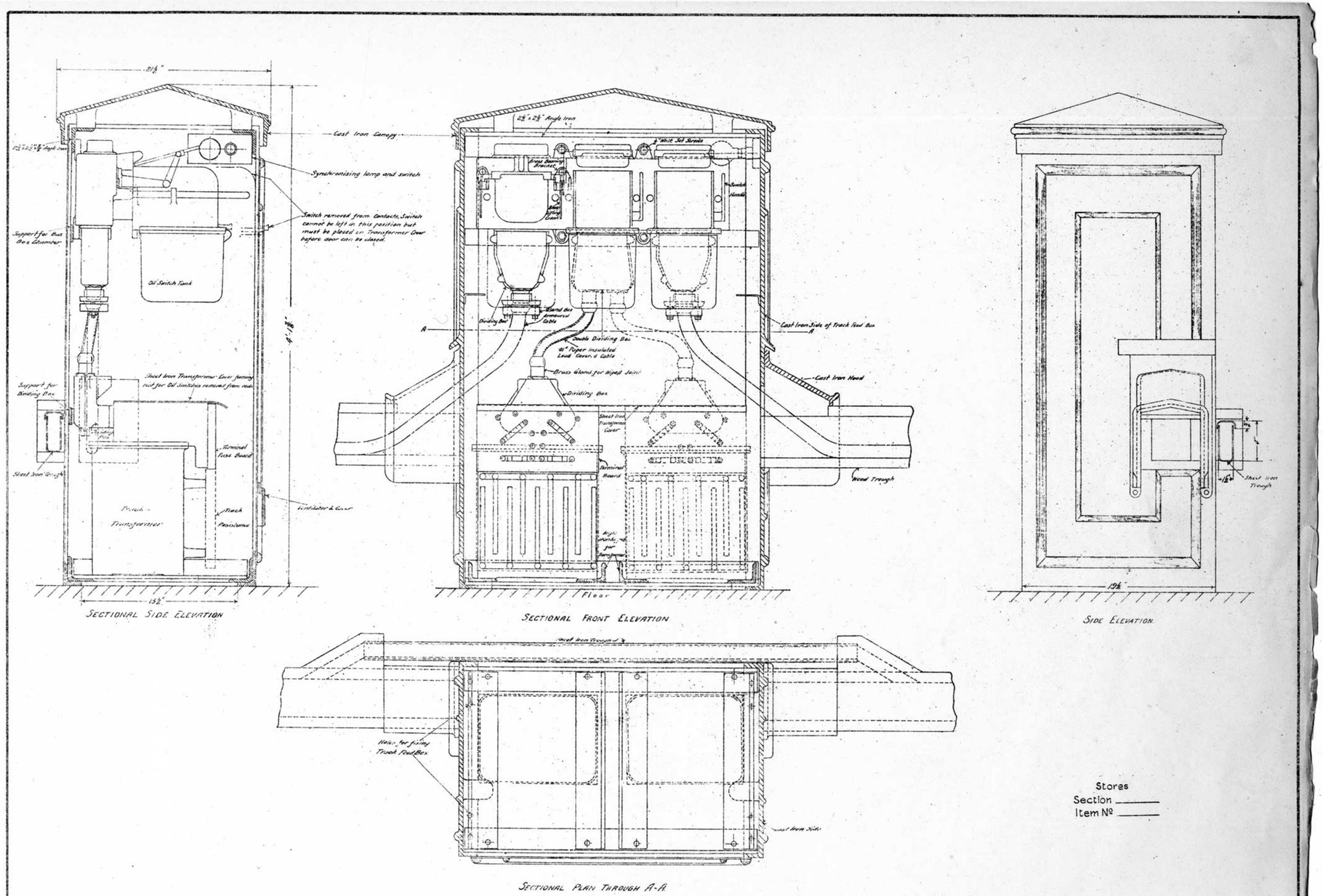

Stores
Section _____
Item Nº _____

VICTORIAN RAILWAYS
2200# TRACK FEED BOX
GENERAL ARRANGEMENT

28-7-17

Engineer of Signals

Traced from X39

J22

L182/25

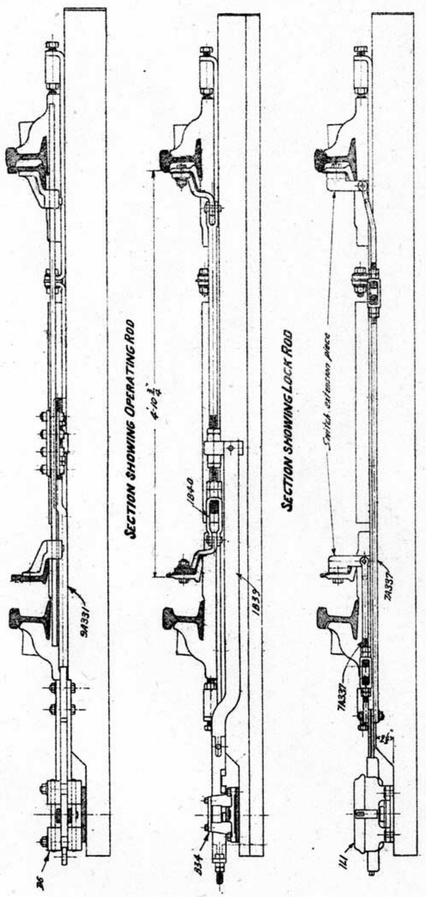

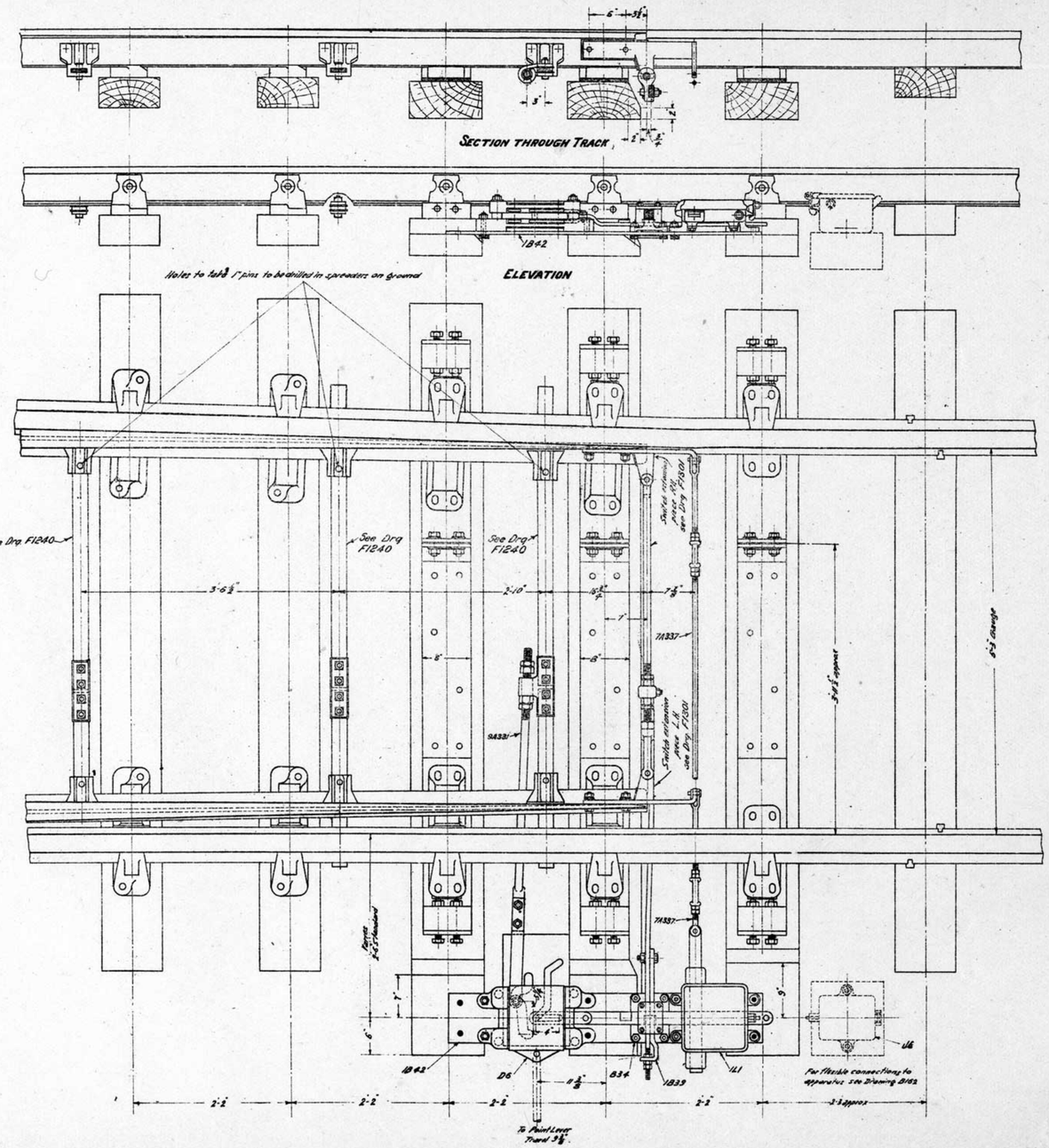

Relaying:-
3 Sleepers cut away at the end to form seating for Foundation Plate.
The sleeper on approach side to be cut on a slope to clear Lock Rod Spreader.
Sleepers to be cut away where necessary to give clearance for bolt heads in Foundation Plate.

FACING POINT LAYOUT K3

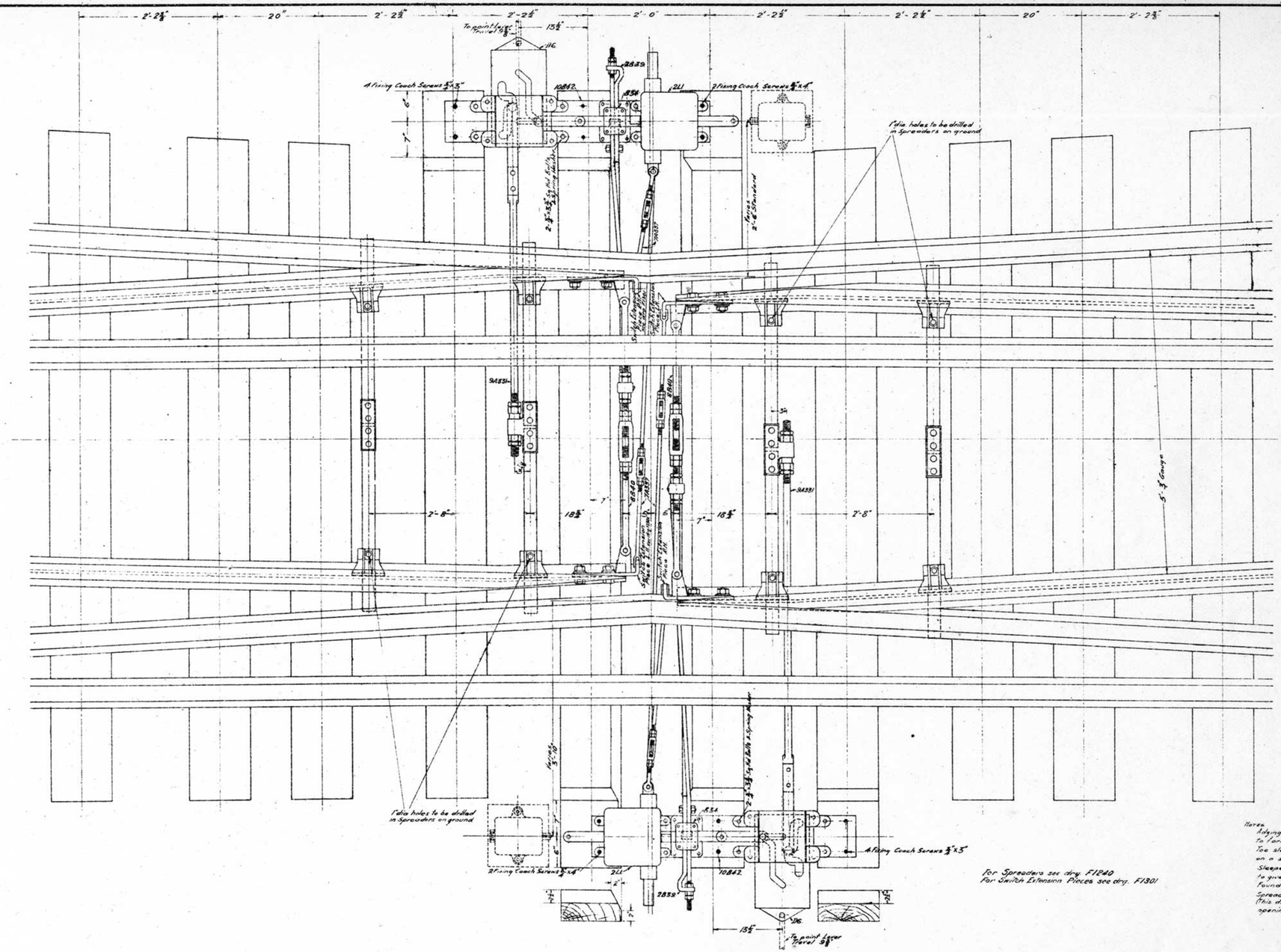

For Spreaders see drg. F1240
For Switch Extension Pieces see drg. F1301

Notes
Adzing :- Sleepers to be cut away at ends to form seating for Foundation Plate.
Toe sleepers on approach side to be cut on a slope to clear Lock Rod Spreader.
Sleepers to be cut away where necessary to give clearance for bolt heads in Foundation Plate.
Spread of blades at toe to be 4'-11". (This dimension is independent of the opening of the switches.)

VICTORIAN RAILWAYS MOVABLE POINT FROG S&LM. (TYPE A) OPERATION H&W. DETECTION Layout Class 'Y' 5-5-20	Engineer of Signals	Drawn by F.W.H.	Traced by F.W.H.
		K 96	

L.212/25

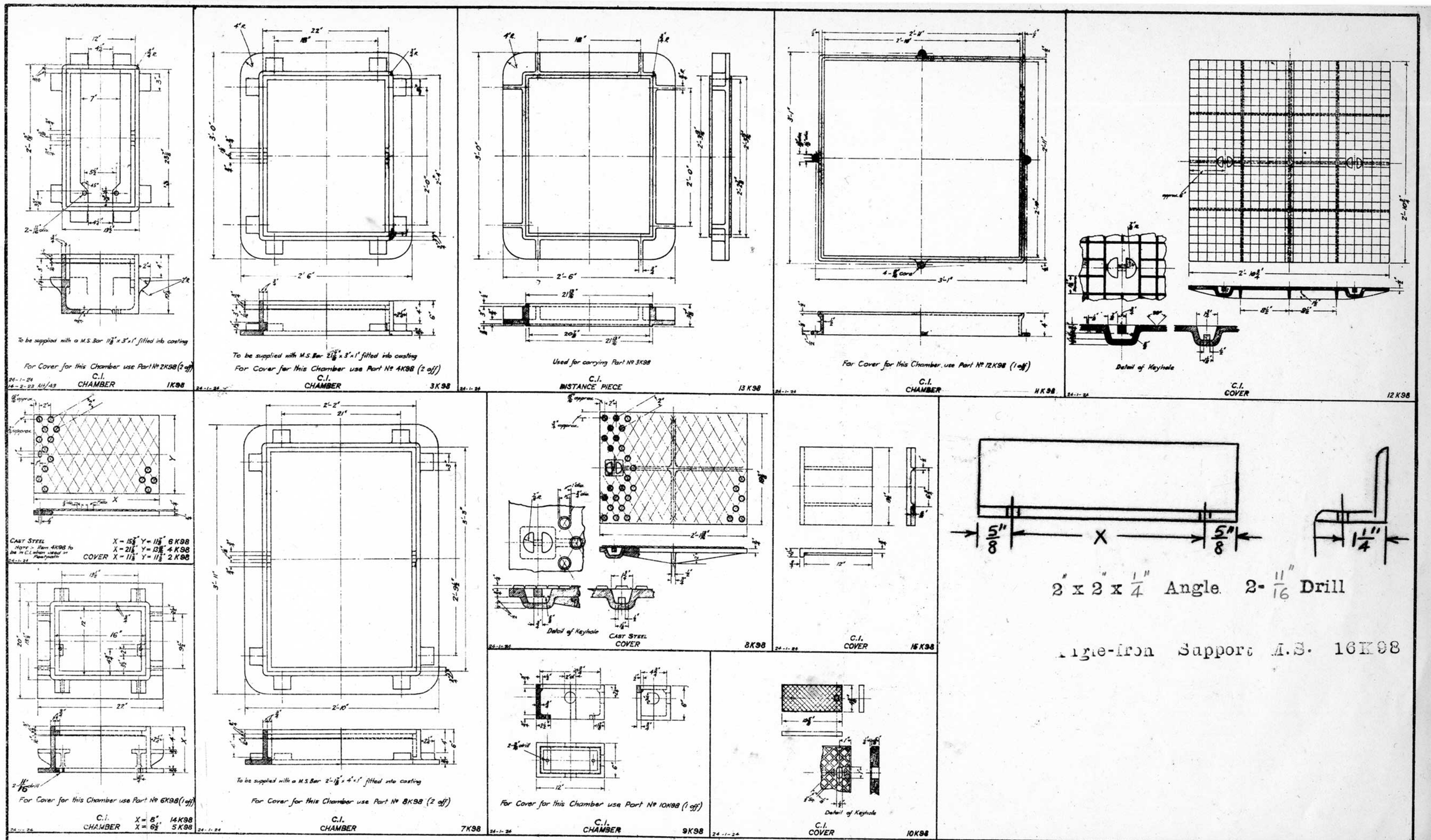

Redrawn 24-1-24
Parts No 15K98, 14K98 & 15K98 added.
Parts No 8K98, 5K98 & 7K98 modified to suit Layout drawing No N193
Original under same title and number dated 2-7-20

VICTORIAN RAILWAYS
INSPECTION CHAMBERS
24-1-24

Chief Engr. of Sup. & Tels. | Drawn by S.C.O. | Traced by S.C.O.

K98

L.193/25

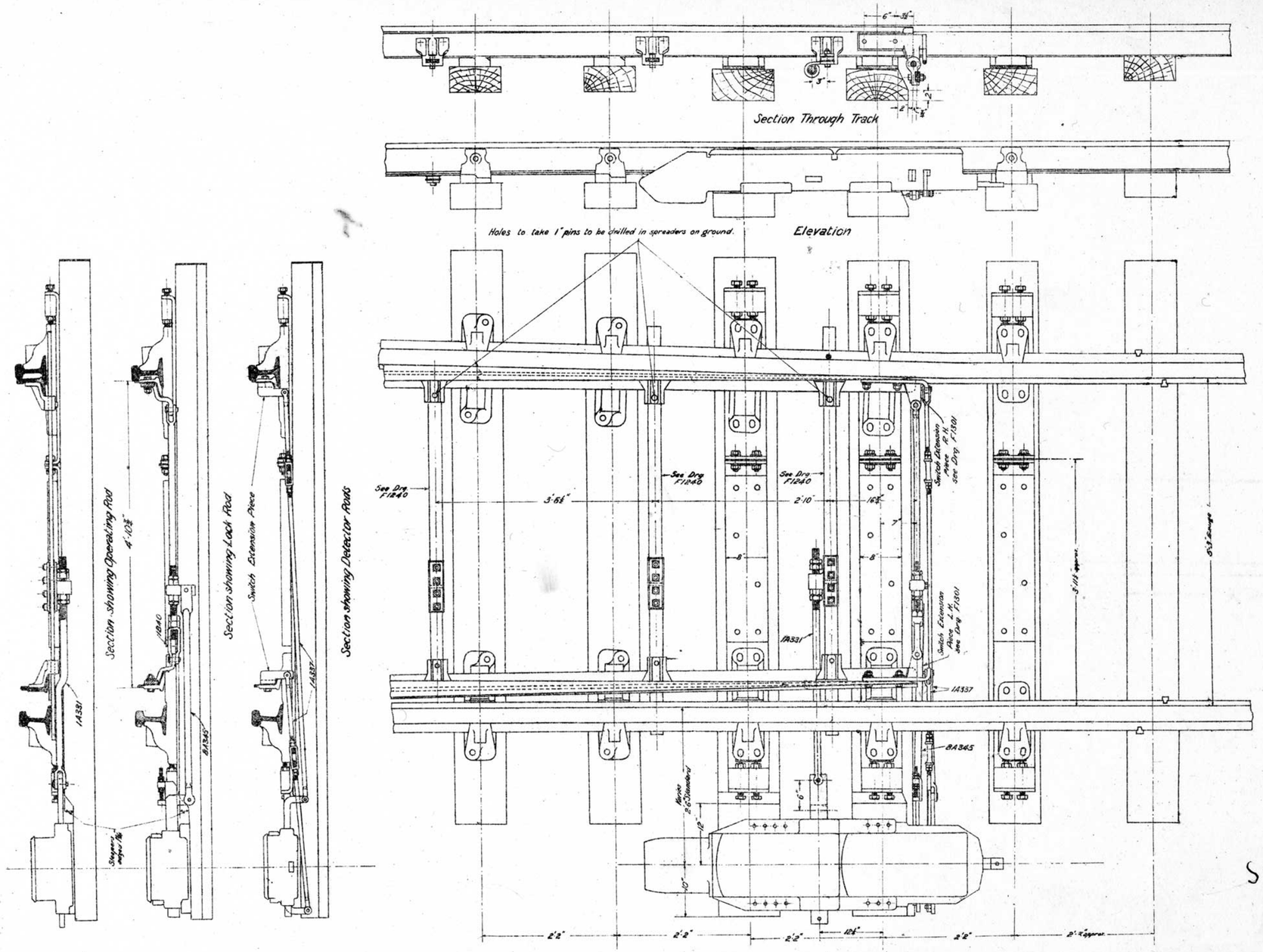

Adzing :-

Sleepers cut away at the end to form seating for movement. (2 - 12"x6")

Toe sleeper on approach side to be cut on a slope to clear Lock Rod Spreader

Superseded by N278

VICTORIAN RAILWAYS F.P. LAYOUT - POWER OPERATED G.R.S.Co Model No 5a 9-2-21	Engineer	Drawn by R.C.C.	Traced by R.C.C.
	K104		

L.210/25

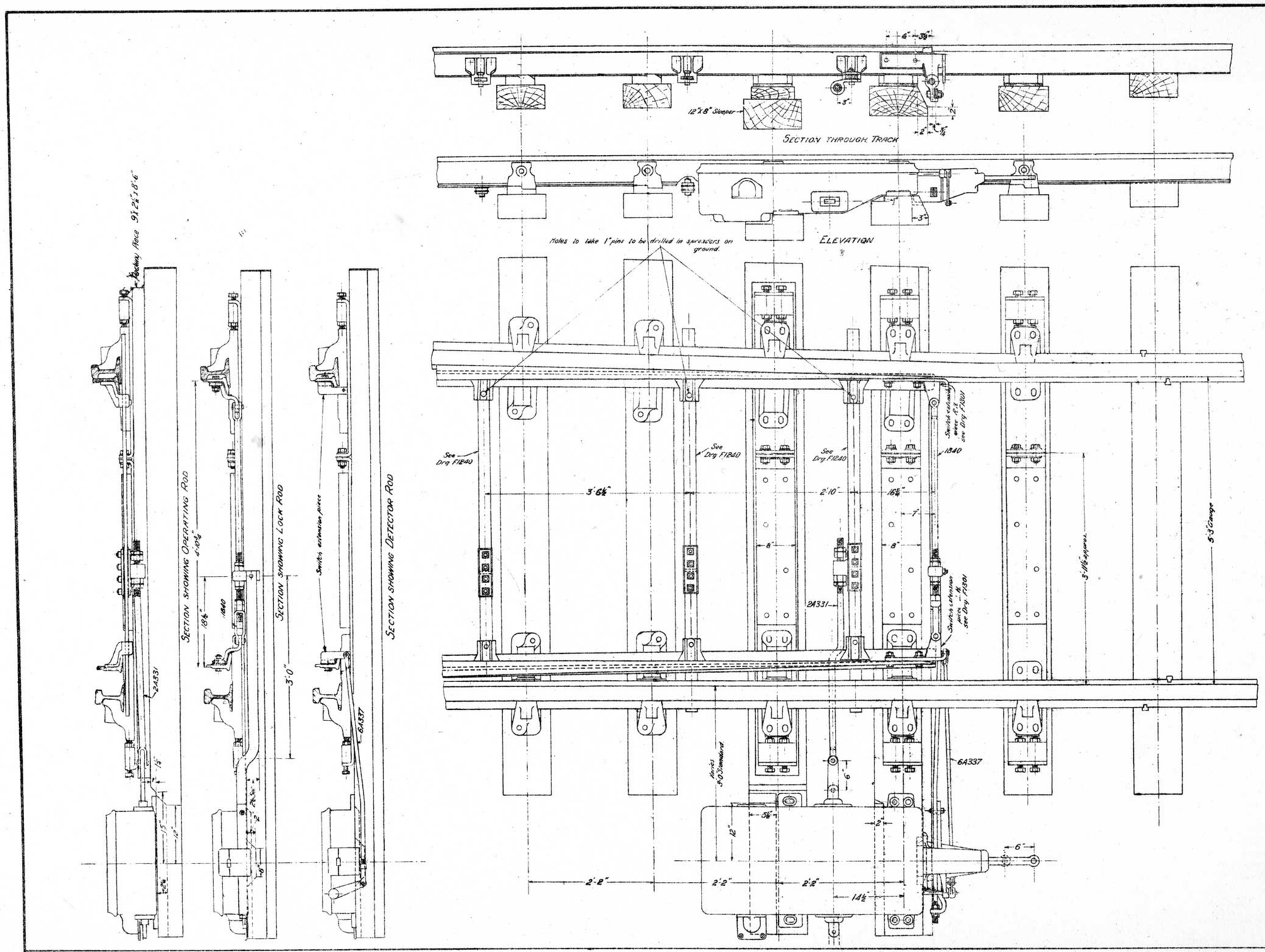

Adzing:-

Approach Side of Toe Sleeper (12"x6") to be cut away on a slope to clear Lock Rod Spreader.
Sleeper in advance to be 12"x6", and cut away at end to form seating for Movement.
Both Sleepers to have portions cut away to clear Movement.

VICTORIAN RAILWAYS F.P. Layout - Power Operated G.R.S. Co Model No 4 14-3-21	Engineer of Signals	Drawn by B.G.C.	Traced by B.G.C.
		K105	

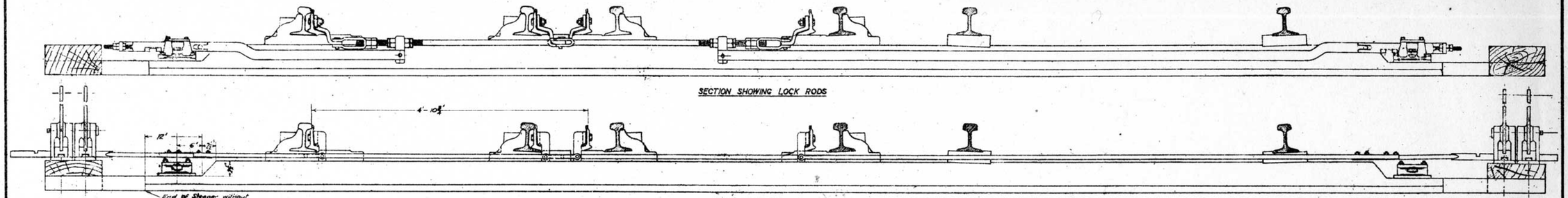

SECTION SHOWING LOCK RODS

SECTION SHOWING HATCHET DETECTORS

Sleepers to be adzed where necessary to give clearance to Apparatus

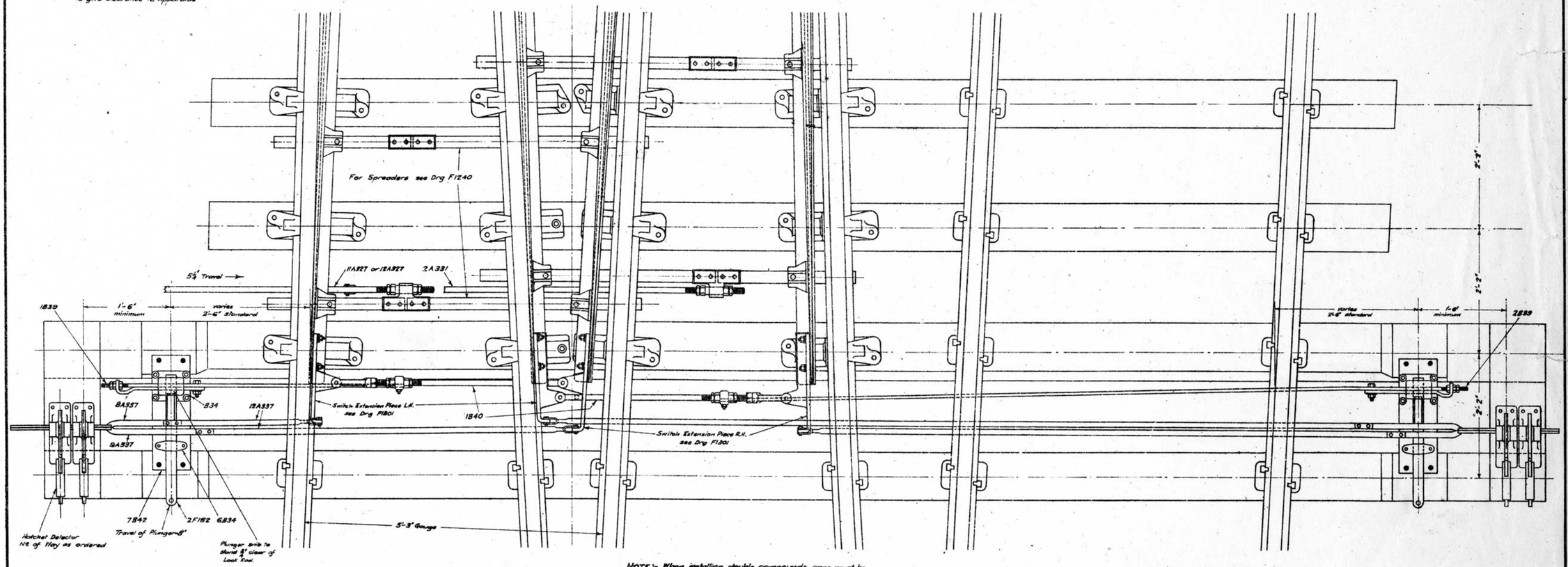

NOTE:- When installing double compounds care must be taken to see that the pair of blades carrying the spreaders nearest the toe are located on the same side as the operating rod.

VICTORIAN RAILWAYS F.P. LAYOUT-COMPOUND HATCHET DETECTOR INDEPENDENT PLUNGER LAYOUT CLASS "Y" 6-2-34	Chief Engr. Signal & Tel.	Drawn by S.C.O.	Traced by S.C.O.
		K123	

L.210/25

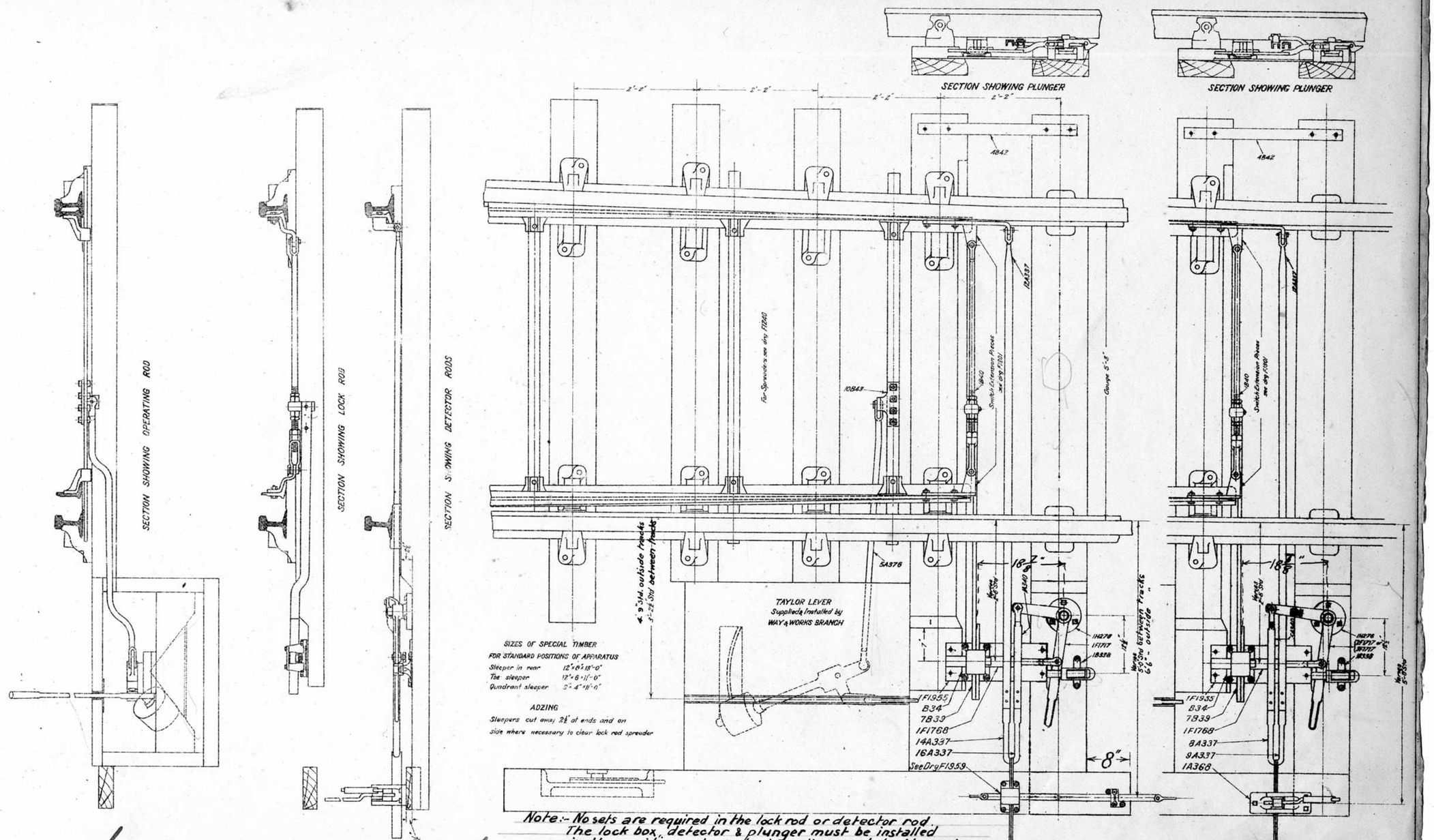

Note:- No sets are required in the lock rod or detector rod. The lock box, detector & plunger must be installed in the positions shown to give alignment to the rods which must work with perfect freedom before and after connecting up.

See Blueprint for Alteration Slip Nos

Superseded see — K160 —

For List of Parts See Drg. F1958

VICTORIAN RAILWAYS
F.P. LAYOUT CLASS "Y"
HAND OPERATED & PLUNGER LOCKED
WITH MECHANICAL DETECTION
28-3-25

Chief Eng. of Sign. Tele. | Drawn by GWS | Traced by GWS

K125

L.150/25

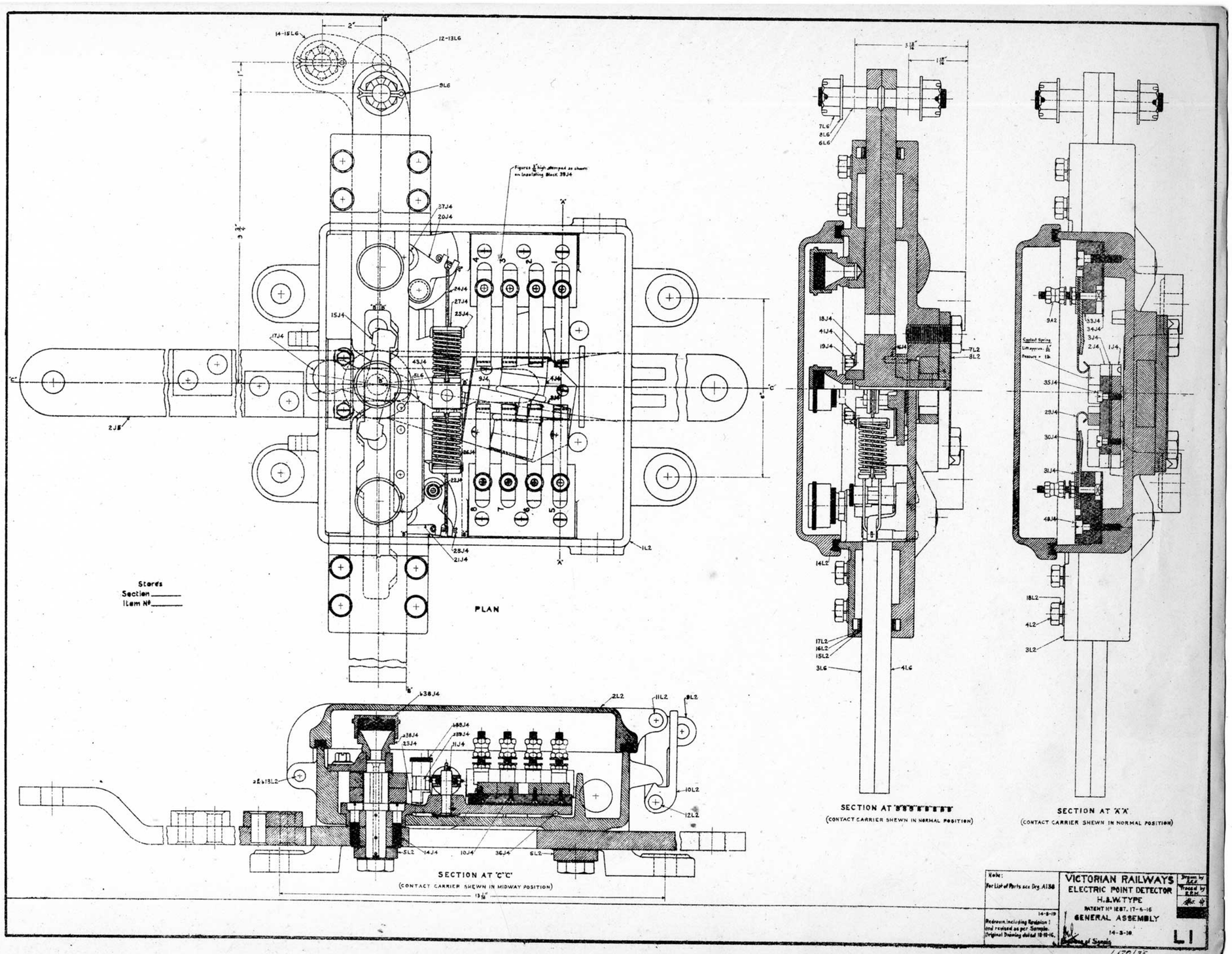
PLAN
SECTION AT 'C'C'
(CONTACT CARRIER SHEWN IN MIDWAY POSITION)
SECTION AT 'B'B'B'B'B'B'B'B'
(CONTACT CARRIER SHEWN IN NORMAL POSITION)
SECTION AT 'A'A'
(CONTACT CARRIER SHEWN IN NORMAL POSITION)
Stores
Section
Item No.
Note:
For List of Parts see Drg. A138
14-8-19
Redrawn, including Revision 1 and revised as per Sample. Original Drawing dated 18-11-16.
VICTORIAN RAILWAYS
ELECTRIC POINT DETECTOR
H.&W. TYPE
PATENT No 1287. 17-6-16
GENERAL ASSEMBLY
14-3-19
Drawn by
Traced by
L1
L170/25

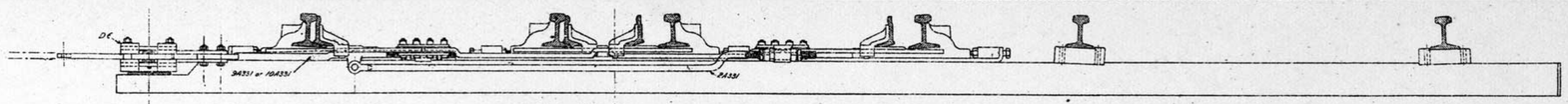

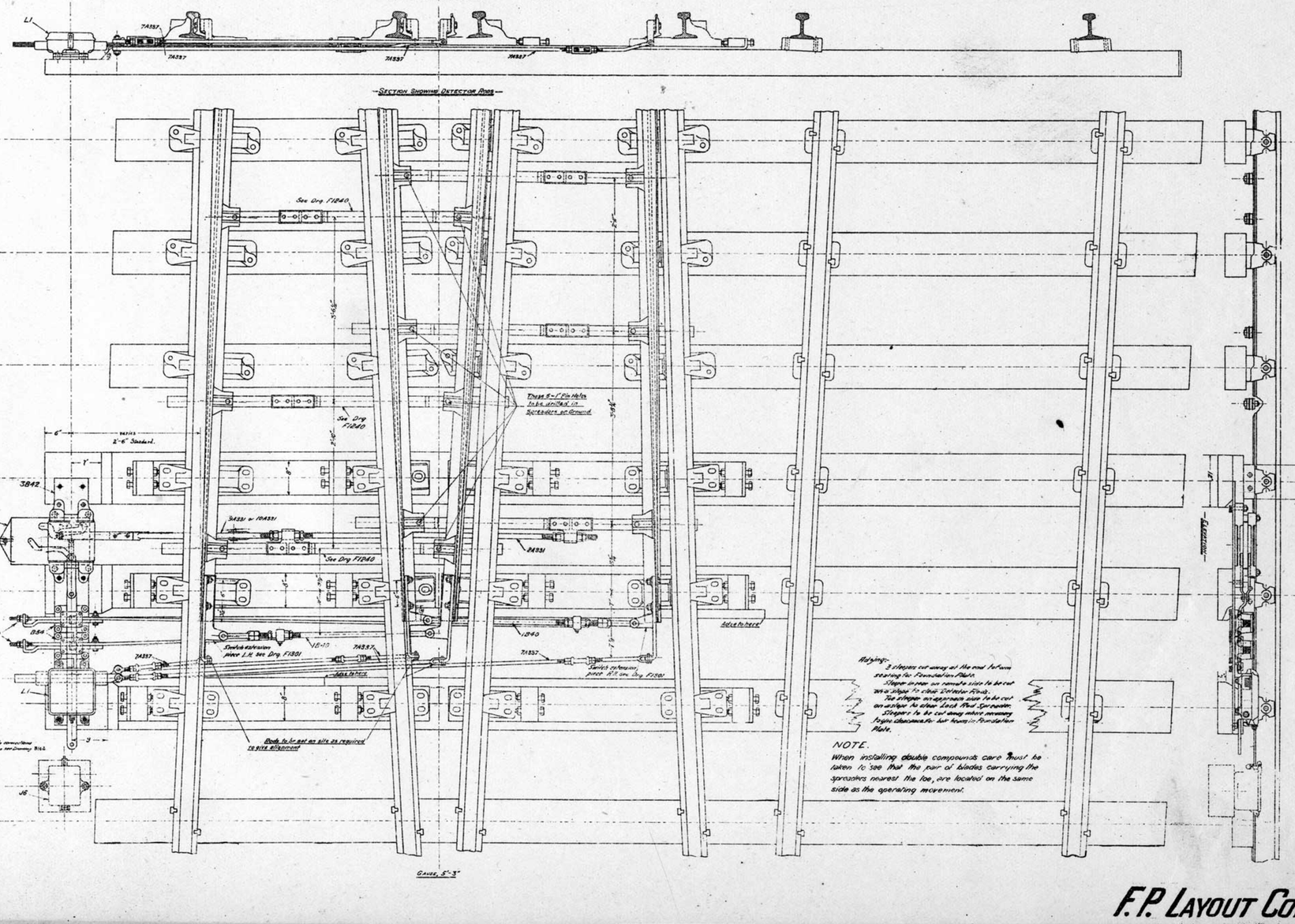

Refer to Drawing for alteration slip No.

F.P. LAYOUT COMPOUND M5

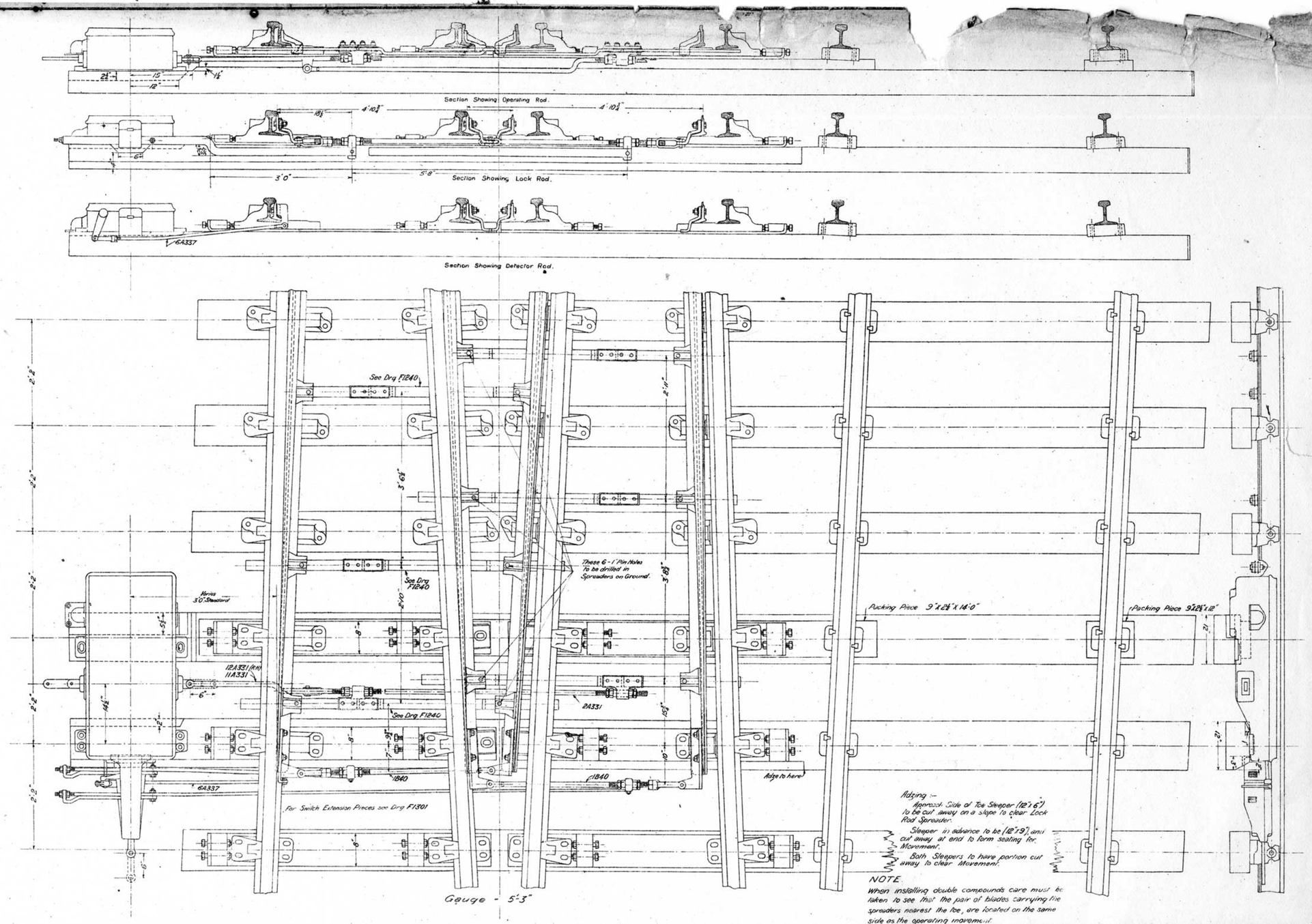

Adzing :-

Approach Side of Toe Sleeper (12"x6") to be cut away on a slope to clear Lock Rod Spreader.

Sleeper in advance to be (12"x9"), and cut away at end to form seating for Movement.

Both Sleepers to have portion cut away to clear Movement.

NOTE.

When installing double compounds care must be taken to see that the pair of blades carrying the spreaders nearest the toe, are located on the same side as the operating movement.

VICTORIAN RAILWAYS F.P. Layout-Power Operated COMPOUND G.R.S. Co Model No 4 ~~Scale 1½" Inst.~~ 4-4-21	Engineer of Signals	Drawn by R.G.C.	Traced by R.G.C.
			M28

L192/25

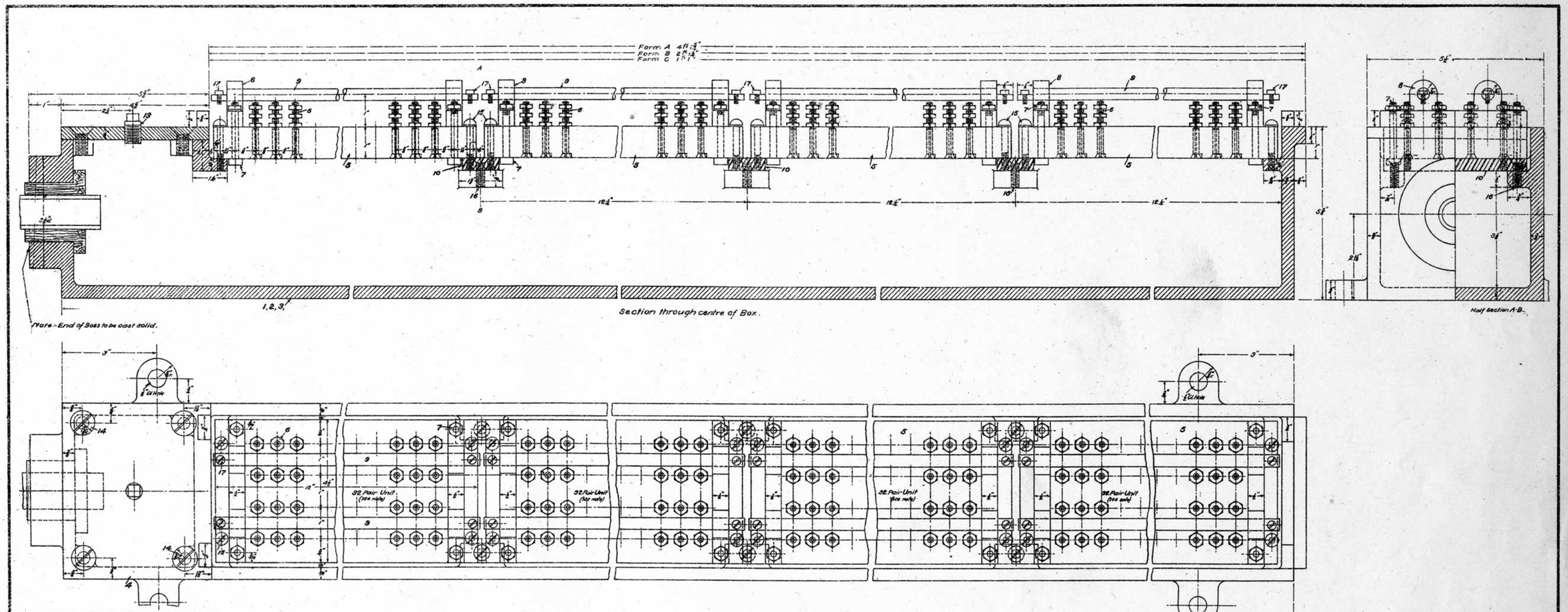

Part No.	Name	Material	Remarks	Form A	Form B	Form C
17	Screws	Brass	4 B.A. x 1/2" long	16	8	4
16	Csk. Hd. Screws	St.	1/16" d x 7/8" long	6	2	
15	Rd. Hd. Screws	St.	3/16" d x 1 3/16" long	16	8	4
14	Csk. Hd. Screws	St.	3/8" d x 7/8" long	4	4	4
13	Gas Plug	W.I.	1/2" d x 3/4" long	1	1	1
~~12~~	~~Bolt~~	~~W.I.~~	~~1/2" d x 3 1/2" long~~	~~1~~	~~1~~	~~1~~
~~11~~	~~Bush~~	~~Ebonite~~	~~1" d x 3" long~~	~~1~~	~~1~~	~~1~~
10	Bar	W.I.	1 1/2" x 3/8" x 4 1/2" long	3	1	
9	Earthing Rod	Brass	3/8" d x 12 1/2" long	8	4	2
8	Supports	Ebonite		8	4	2
7	Sq. Hd. Bolts	W.I.		16	8	4
6	Csk. Hd. Bolts & Nuts	Brass		256	128	64
5	Block	Ebonite	12" x 4 1/2" x 1" thick	4	2	1
4	Cover	C.I.		1	1	1
3	Box	C.I.				1
2	Box	C.I.			1	
1	Box	C.I.		1		

● Unit Capacity of Ebonite Base = 32 Pairs, of Porcelain Base (N274) 26 Pairs

For Standard Method of Numbering Wires see -- F1845

Superseded by B589 & A421

V.R. SIGNAL & TELEGRAPH BRANCH

TERMINAL BOX FOR PAPER INSULATED LEAD-COVERED TELEPHONE CABLES.

~~SCALE - Full Size.~~

Drawn By C.B.
Traced - C.B.
Checked - C.B.
Approved -

DRAWING No. M44

DATE 25-7-21.

L192/25

V. R.

SELECTIVE FACING POINT LOCK BAR.

FOR 'X' CLASS LAYOUTS

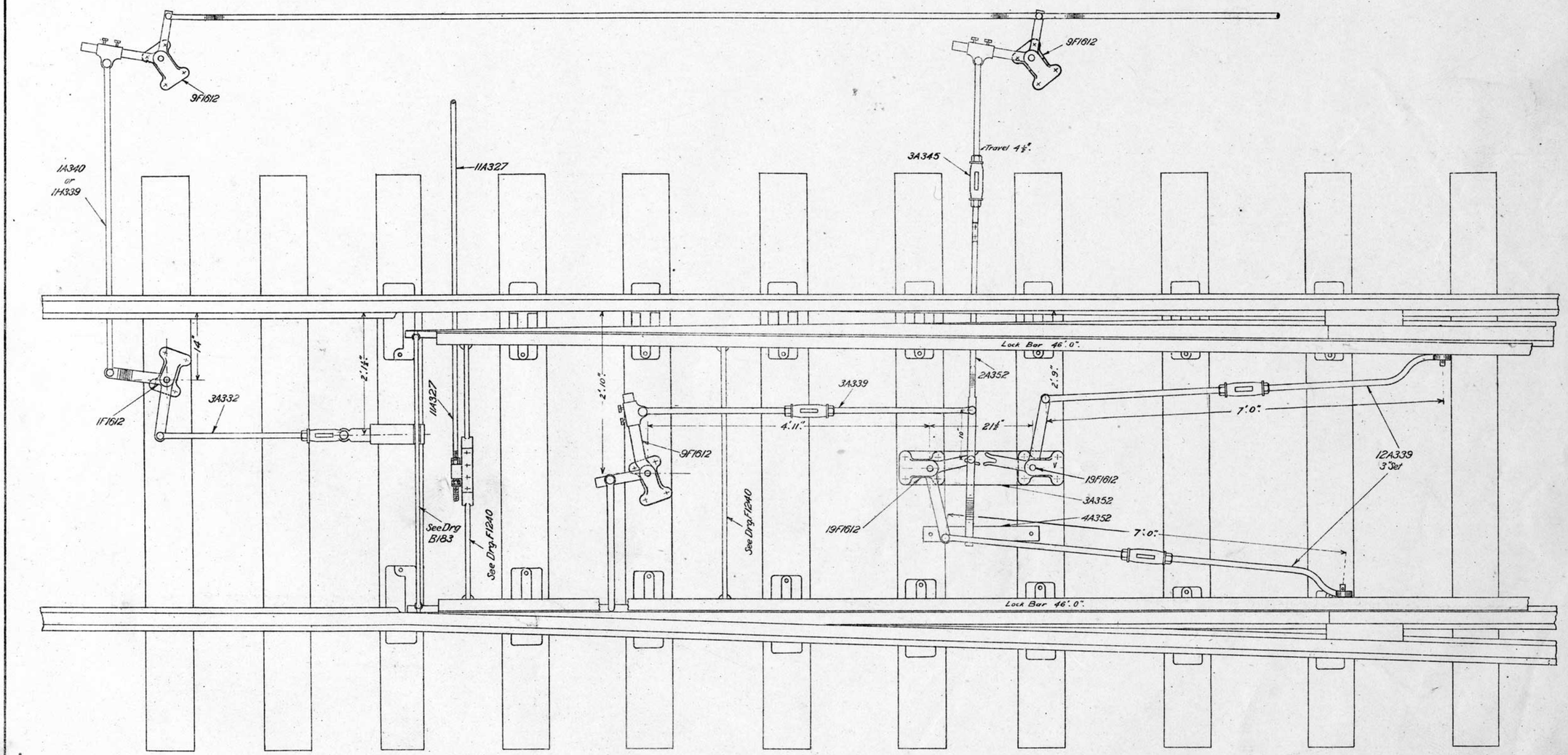

For details of Lock Bar Clips see Dr'g N210.

N13

— V. R. —

SADDLE CASTING FOR SPECIAL LOCK BARS

[For 80 lbs Rails.]

4·0·19

DETAIL of LOCK BAR.

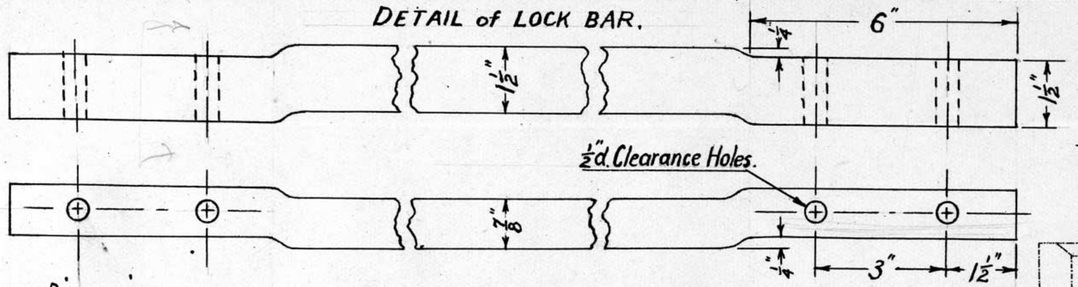

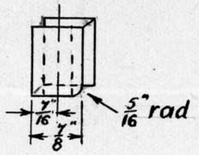

Stores
Section_____
Item No_____

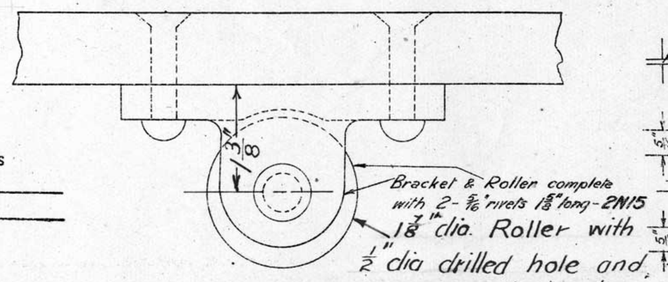

SIDE VIEW OF ROLLER

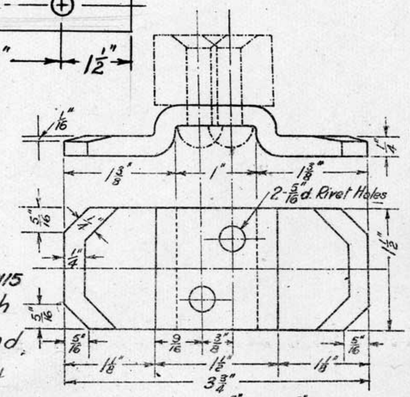

To be supplied with 2-5/16" Rivets, 1⅝" long.

M.S. SPECIAL GUIDE — 3N15

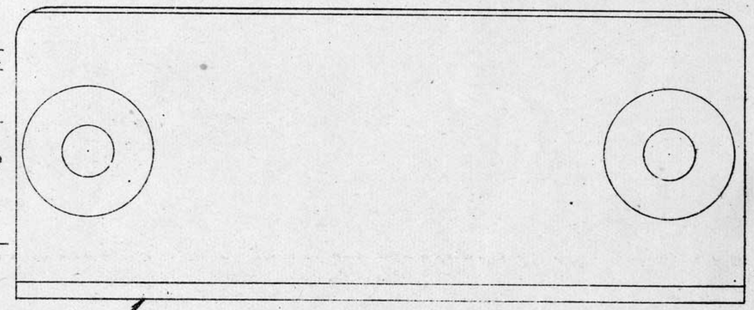

SIDE ELEVATION

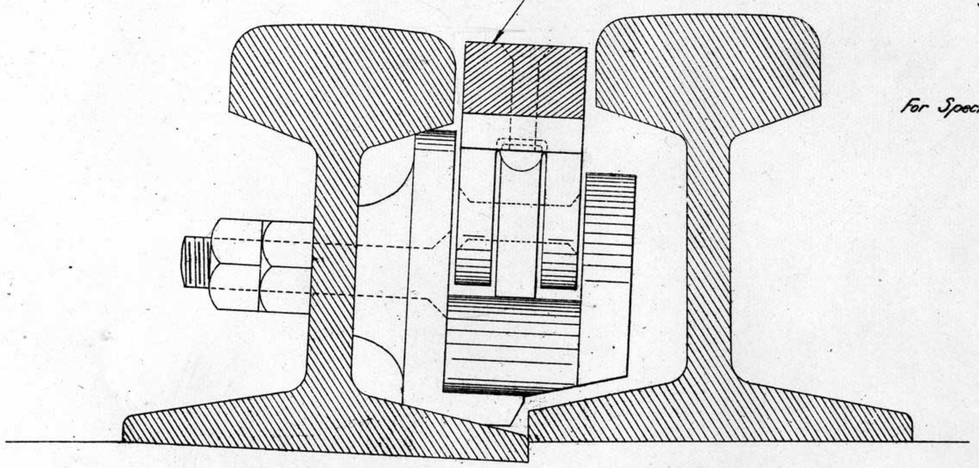

END ELEVATION

Stores
Section_____
Item No_____

For Special Ferrules see B190

Saddle - 1N15

Stores
Section_____
Item No_____

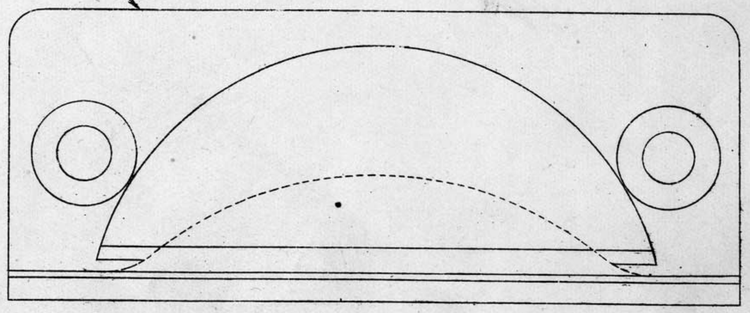

SIDE ELEVATION

[Next Guard-rail.]

N15

— V. R. —

— SADDLE CASTING FOR SPECIAL LOCK BARS —

[For 100 lbs. Rails.]

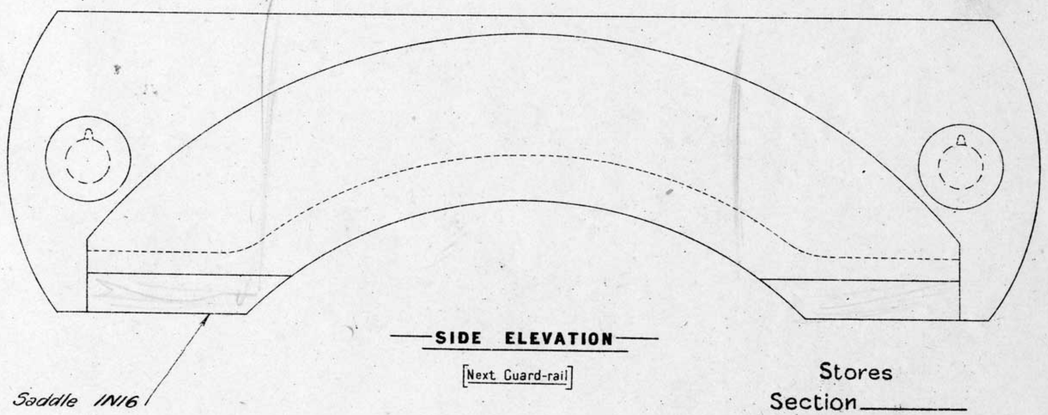

— SIDE ELEVATION —

[Next Guard-rail]

Saddle 1N16

Stores
Section_____
Item No_____

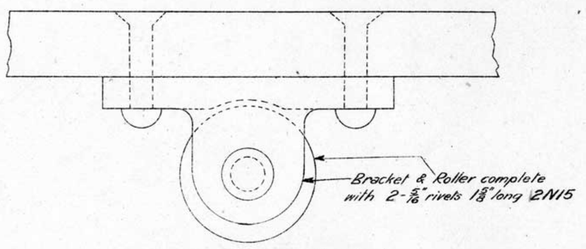

— SIDE VIEW OF ROLLER —

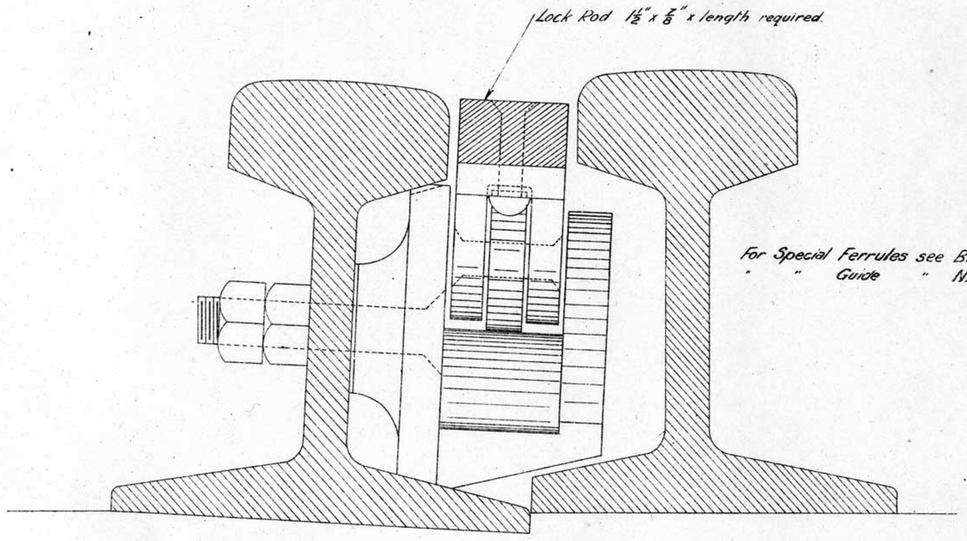

For Special Ferrules see B190
" " Guide " N15

— END ELEVATION —

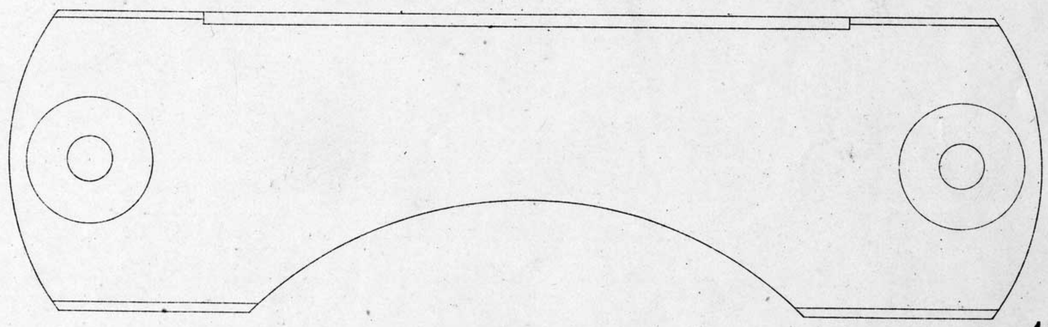

— SIDE ELEVATION —

N16

For DETAIL of LOCK BAR see N15.

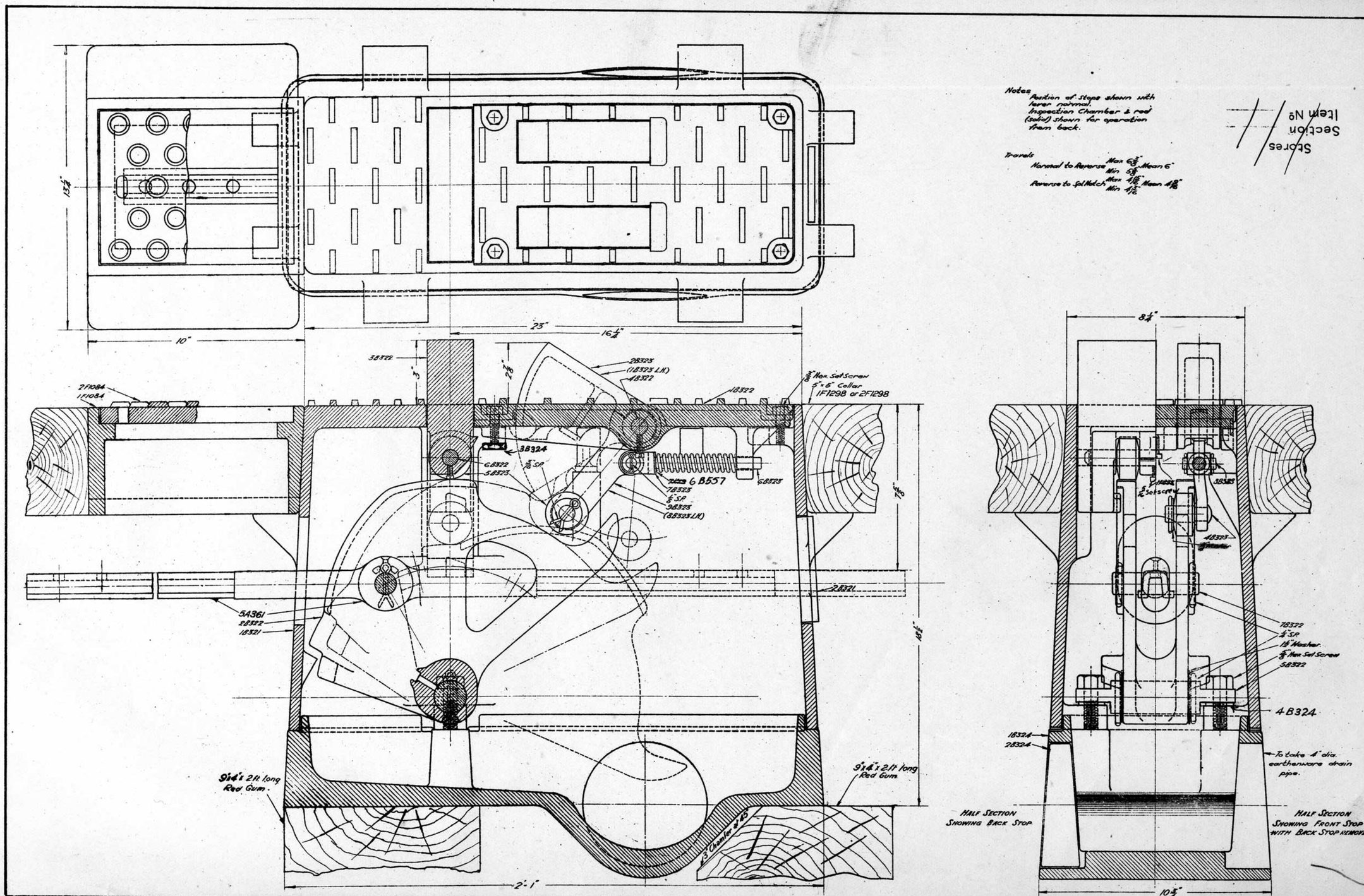

VICTORIAN RAILWAYS
GATE STOP
TYPE M
Assembly
Patent No 169/86/20
30-7-20 22-6-21

Note
For material list see drawing F1033.
This drawing supersedes drawing B364.

Date	Alteration
14-8-22	Alteration No 29
3-7-23	Alteration No 50
14-9-23	Alteration No 55 & 56
4-12-23	Alteration No 61

See Drawing for further alteration slip No

Engineer of Signals
Drawn by K.W.H.
Traced by K.W.H.

N 152

N152

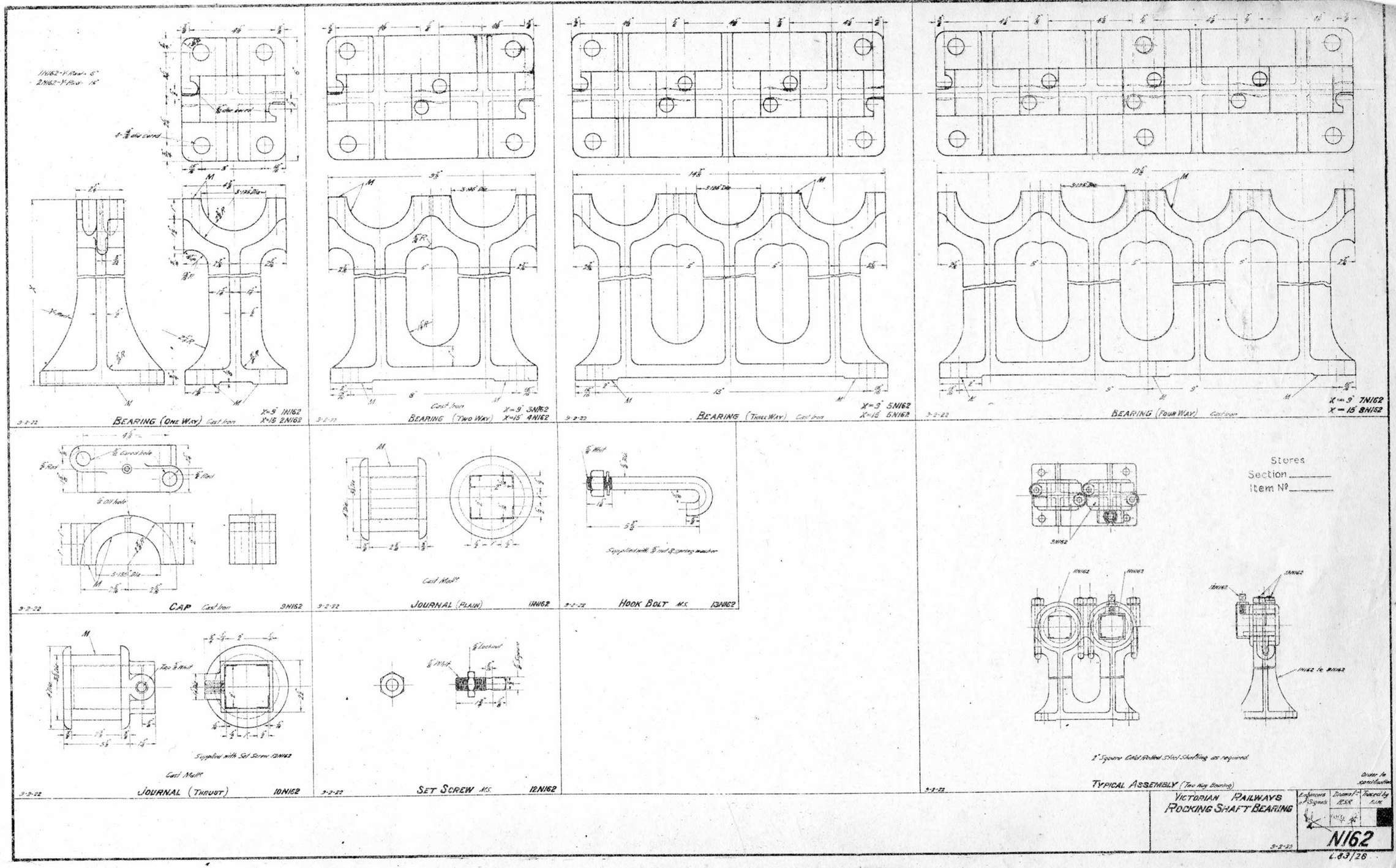

1N162-Y-Rad - 6"
2N162-Y-Rad - 15"
BEARING (ONE WAY) Cast Iron
X=9" 1N162
X=15" 2N162
9-2-22
Cast Iron
BEARING (TWO WAY)
X=9" 3N162
X=15" 4N162
9-2-22
BEARING (THREE WAY) Cast Iron
X=9" 5N162
X=15" 6N162
9-2-22
BEARING (FOUR WAY) Cast Iron
X=9" 7N162
X=15" 8N162
9-2-22
CAP Cast Iron
9N162
9-2-22
Cast Mall^e
JOURNAL (PLAIN)
11N162
9-2-22
Supplied with 5/8" nut & spring washer
HOOK BOLT M.S.
13N162
9-2-22
Supplied with Set Screw 12N162
Cast Mall^e
JOURNAL (THRUST)
10N162
9-2-22
SET SCREW M.S.
12N162
9-2-22
Stores
Section
Item No
9N162
11N162
12N162
13N162
1N162 to 9N162
2" Square Cold Rolled Steel Shafting as required.
TYPICAL ASSEMBLY (Two Way Bearing)
9-2-22
Order to specification
VICTORIAN RAILWAYS
ROCKING SHAFT BEARING
Engineers of Signals
Drawn by R.S.R.
Traced by F.J.M.
N162
9-2-22
L.83/28

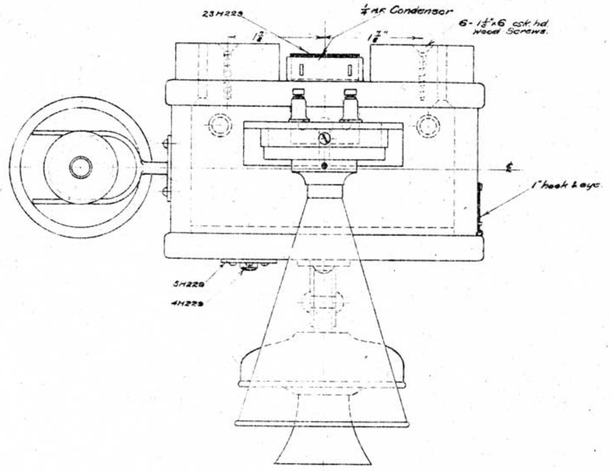

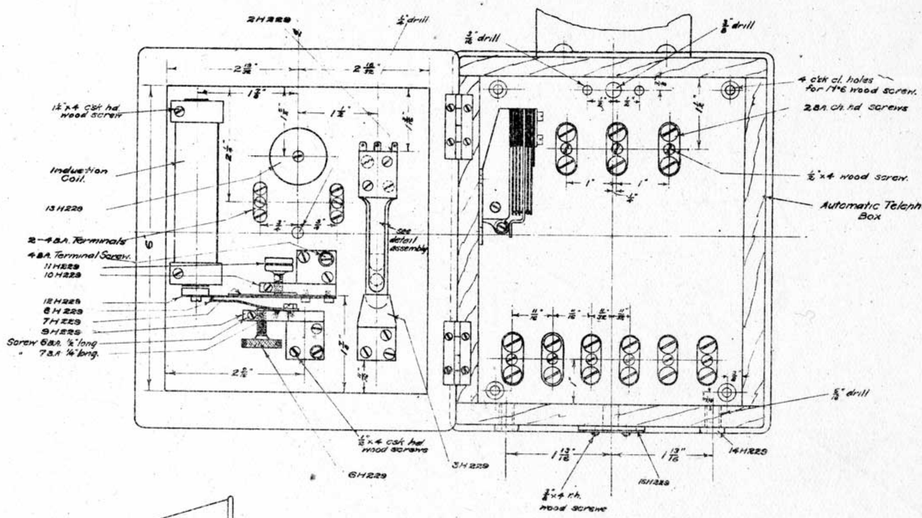

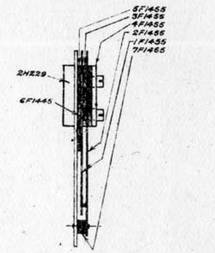

Arrgt. of Springs on Pt No. 2H229.

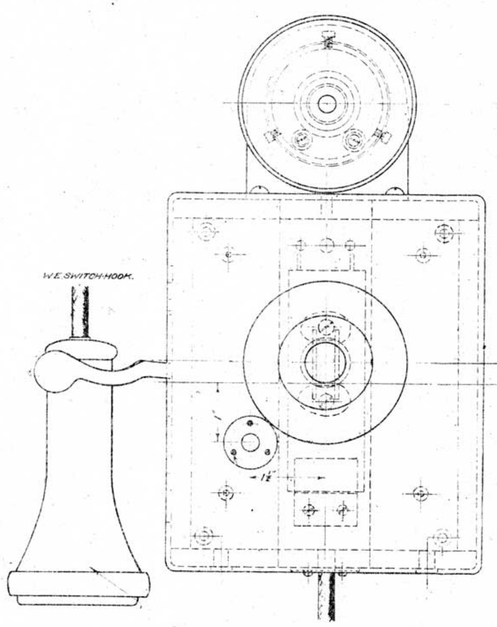

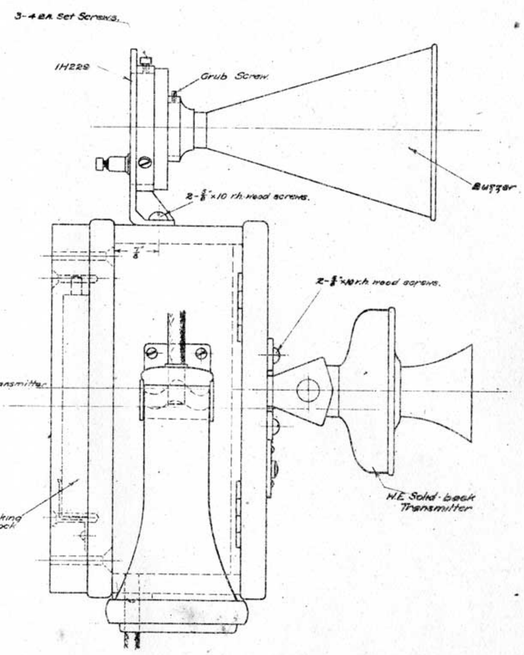

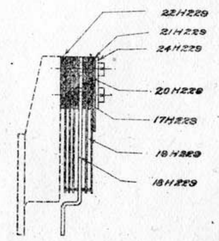

Arrgt of Spring Contacts on Switch-hook

Note:-

① Bobbin to be wound non-inductively with 5000 turns, 44 S.W.G. enamelled copper wire.

⊗ Spring Contacts to be arranged as shown on Drawing.

⊙ Buzzer coils to be fitted with Part 16H229 & then wound with 2450 turns each, of 44 S.W.G. Single Silk covered Copper wire. Total of 4900 turns, Resistance = 1000 ohms.

⊖ Induction Coil to be rewound as follows:- Primary - 500 turns, 44 S.W.G. Single Silk covered Copper wire. Secondary - 2850 turns 44 S.W.G. Single Silk covered Copper wire.

Stores
Section _____
Item No. _____

	No.	Name	Material	Quantity
	1H229	Bracket.	G.M.	1
	2H229	Contact Spring.	Nickel Silver	1
	3H229	Contact Plate.	Brass.	1
	4H229	Button	Ebonite	1
	5H229	Bush.	Brass	1
	6H229	Adjusting Screw.	Brass	1
	7H229	Spring	Spring St.	1
	8H229	Contact Spring	"	1
	9H229	Bracket	Brass	1
	10H229	Bracket	Brass	1
	11H229	Adjusting Screw.	Brass.	1
	12H229	Armature Spring	Spring St.	1
①	13H229	Bobbin	Ebonite	1
	14H229	Bush	"	2
	15H229	Plate.	"	1
⊙	16H229	Bobbin Cheek.	Brass	4
	17H229	Insulating Bush.	Ebonite	2
	18H229	Contact Spring	Brass	1
	19H229	Contact Spring	Germn. Silver	5
	20H229	Insulating Strip	Fibre	3
	21H229	" "	"	1
	22H229	" "	Ebonite	1
	23H229	Clip	Brass	1
	24H229	Clamping Strip	"	1
	Stock	Grub Screw 7 B.A ¼" long	M.S.	1
	"	Packing Blocks 2"x⅜"x⅞"	Wood	2
	1F1455	Contact Spring	German Silver	1
	2F1455	" "	"	1
	3F1455	Clamp	Brass	1
	4F1455	Insulation	Fibre	2
	"	"	"	1
	5F1455	Bush	Ebonite	1
	7F1455	Spacing Piece	"	1
	1F202	2 B.A Terminals	Brass	9
	3F202	4 B.A Terminals	"	2
	Stock.	⅝"x4 wood Screws (csk. head)	M.S.	18
		Automatic Telephone Box	Wood	1
		W.E. Receiver & Cord		1
⊗		W.E. Switch-hook		1
		W.E. Solid-back Transmitter		1
		⅝"x4 wood screws (round head)	Brass	4
		½"x3 " " (" ")	Brass	3
		Condensor - ½ M.F.		1
		Set Screw 4 B.A x ¼" (cheese hd)	M.S.	3
		Screw 7 B.A ¼" long (" ")	M.S.	5
		Terminal Screw 2 B.A	Brass	18
		" " 4 B.A	"	8
		⅝"x4 Wood Screws (csk. head)	"	3
		⅜"x10 " " (round hd)	M.S.	4
		½"x6 " " (csk. head)	M.S.	46
⊖		Induction Coil.		1
		Screws 6 B.A x ½" long	M.S.	4
		1" Hook & Eye	Brass	1
⊙		Buzzer (complete)		1

N 182

VICTORIAN RAILWAYS
BUZZER PHONE
"V.R." TYPE
Assembly.

SECTION SHOWING OPERATING RODS

SECTION SHOWING LOCK AND DETECTOR RODS

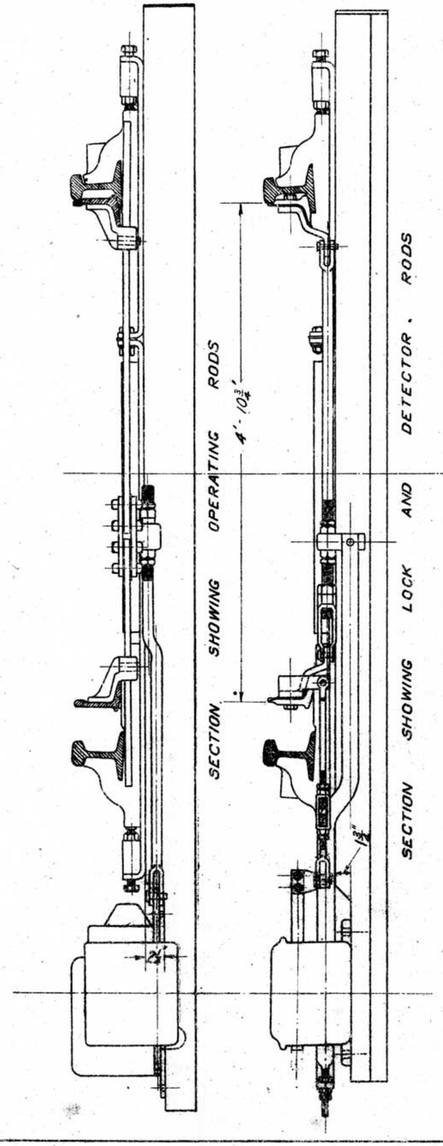

SECTION THROUGH TRACK

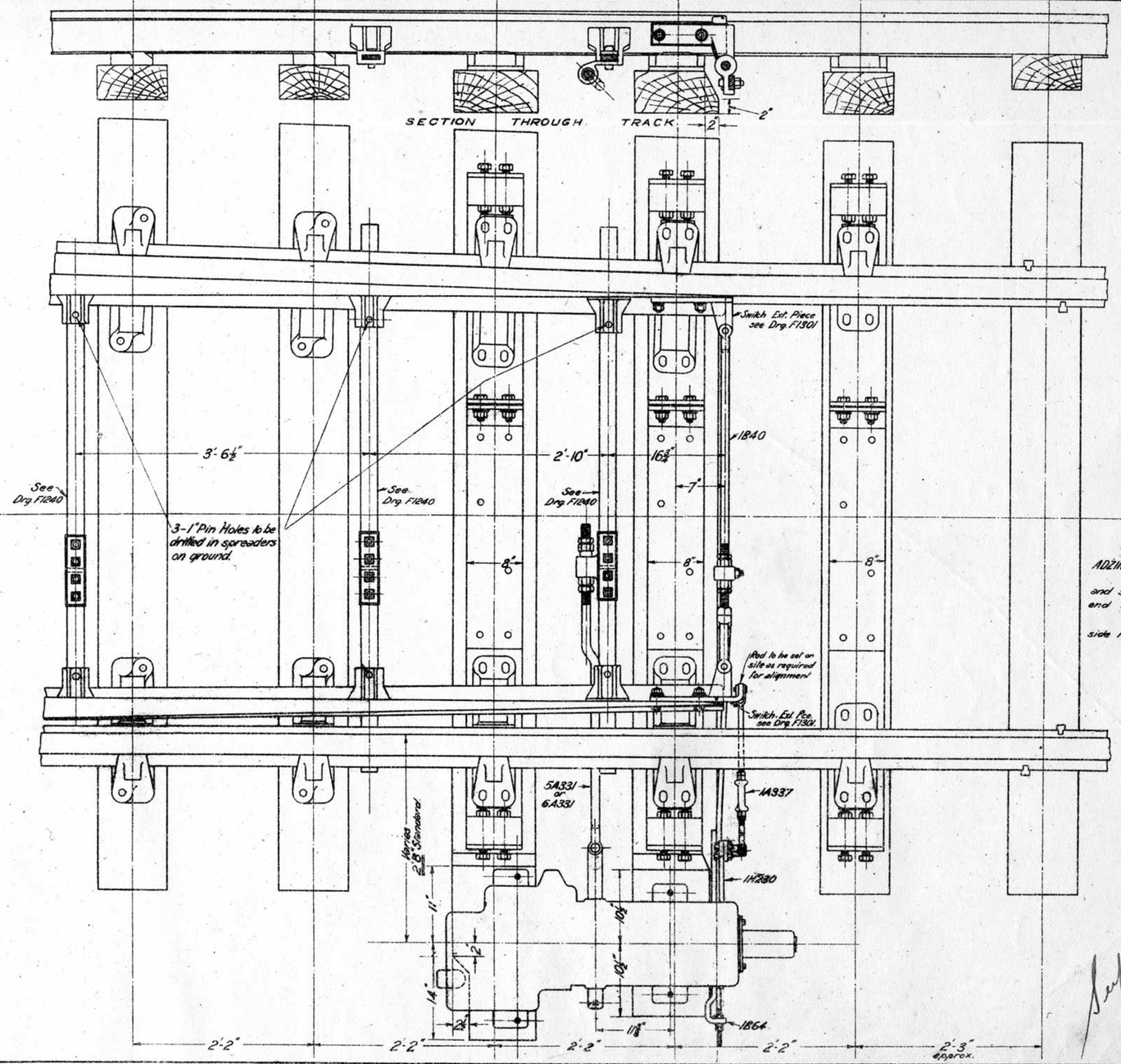

ADZING :-

Toe sleeper cut away 1⅞" at end and sleeper in advance cut away 2½" at end to form seating for machine.

Toe sleeper cut away on approach side to clear lock rod spreader.

Superseded By N 277.

Note
This drawing is Superseded by N277 on which machine seating is on level of top of toe sleeper.

VICTORIAN RAILWAYS
F.P. Layout - Power Operated
Single Pair
Westinghouse Machine Style M
13-1-32

Chief Engr. of Signals	Drawn by	Traced by
	R.G.C.	R.G.C.

N183

L.82/25

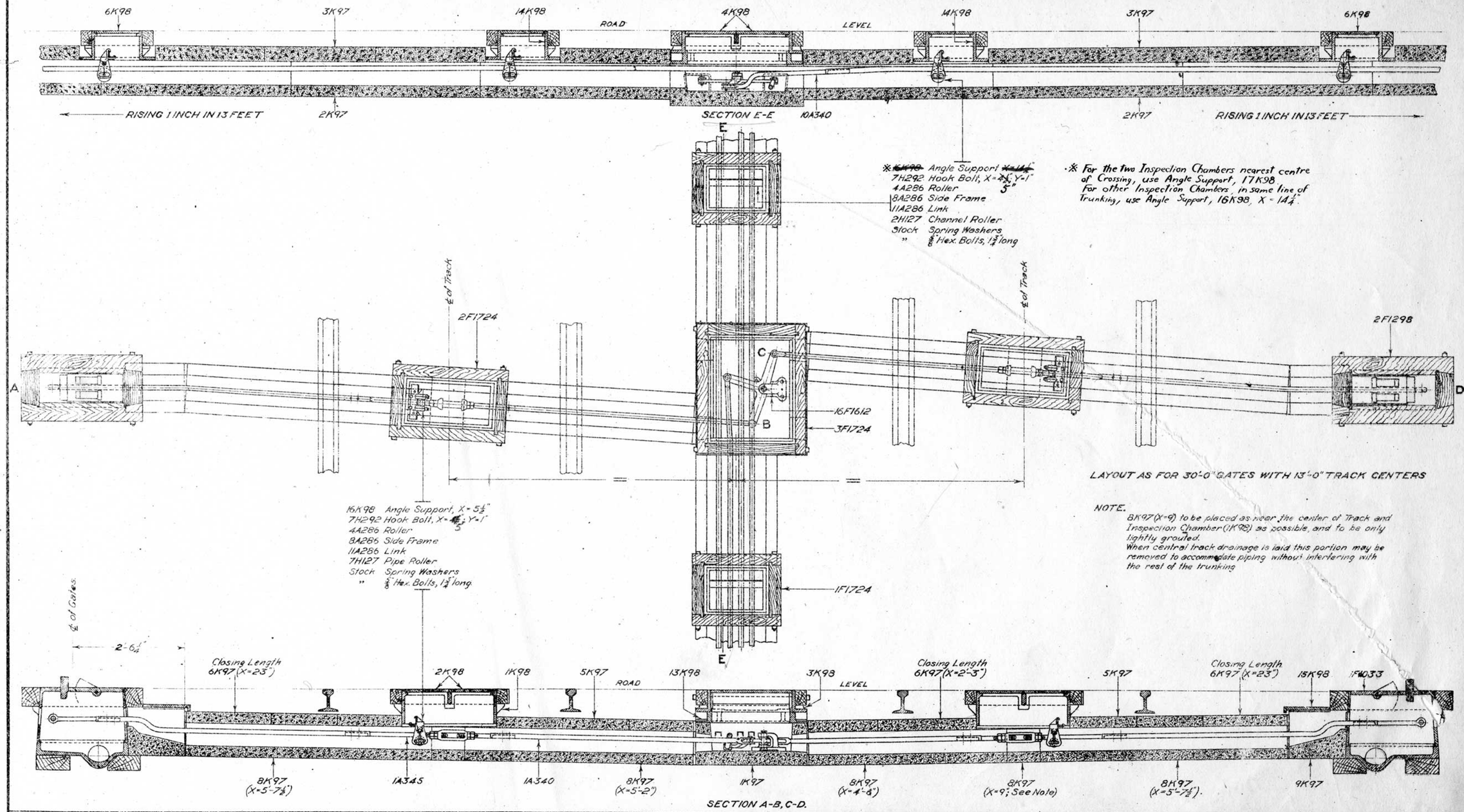

For connection to Type "C" Gate stops
see print issued after 29-11-27

In alteration on Blueprint 22-3-27

Redrawn including Alterations No 92 & 116. Original under same title & number dated 2-2-24.

VICTORIAN RAILWAYS
CONCRETE TRUNKING
FOR GATE STOPS (Front Operated)
TYPICAL LAYOUT FOR SQUARE CROSSING
20-1-26

Chief Engr. of Bgs & Tels.	Drawn by C.E.W.	Traced by L.J.R.

N193

L.83/26

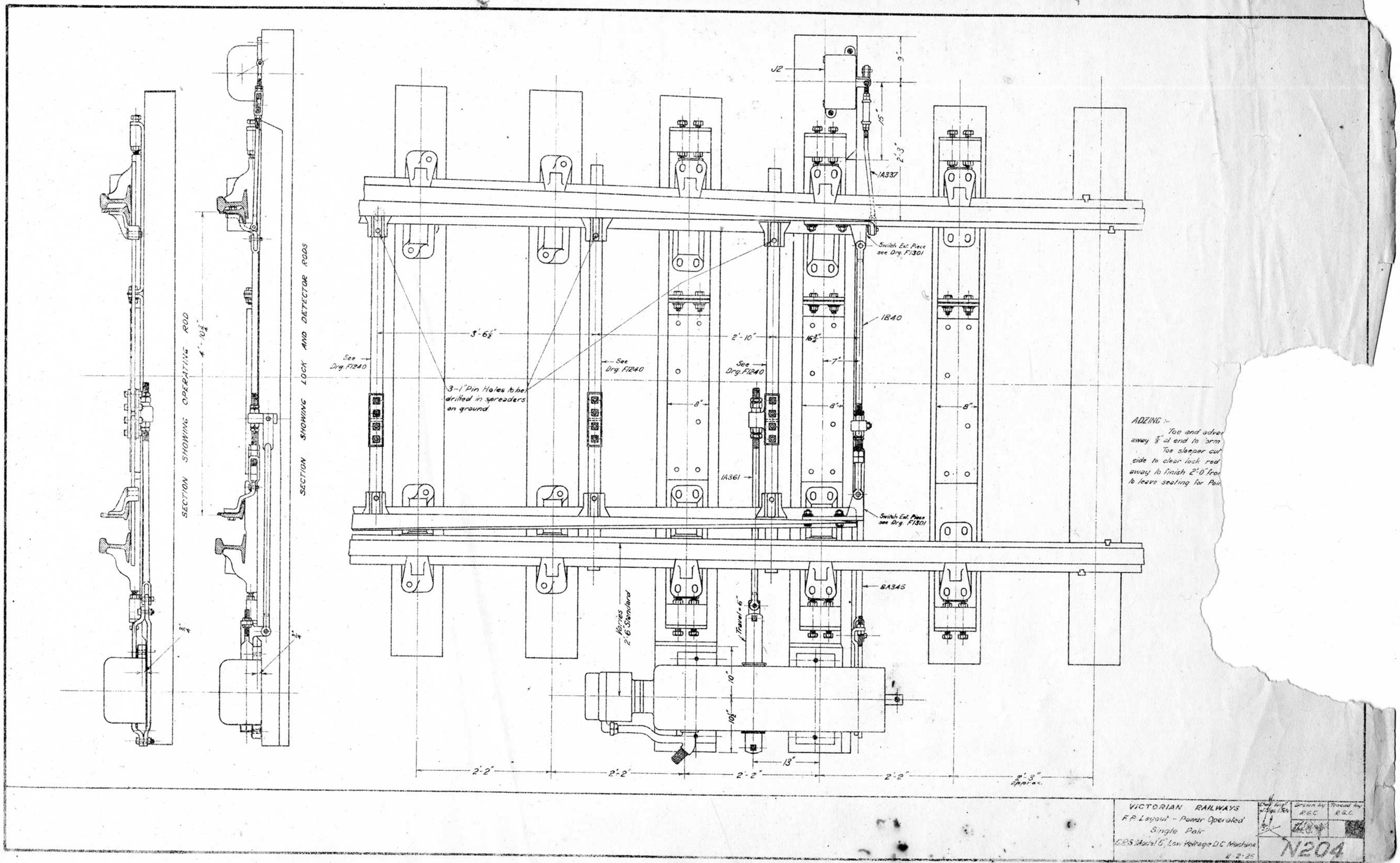

VICTORIAN RAILWAYS
F.P. Layout - Power Operated
Single Pair
C.R.S. Model 5, Low Voltage D.C. Machine
2-2-25

Chief Engr. of Sigs. & Tels.

Drawn by R.G.C.

Traced by R.G.C.

N204

2.3.3/26

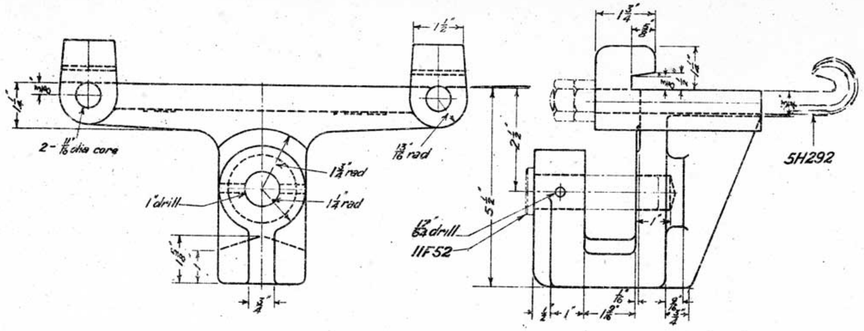

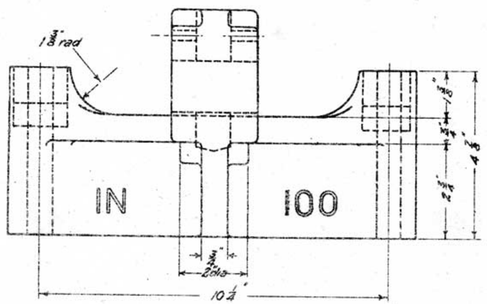

Supplied with
11F52 3⅜" long
2–5H292 8½" long & locknut
½" Split Pin 3½" long

C.I.
29·9·25 100lb INSIDE CLIP 1N209

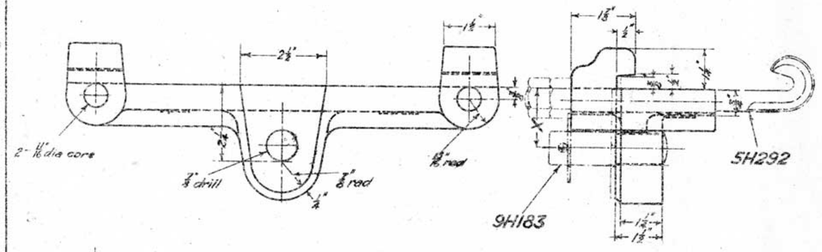

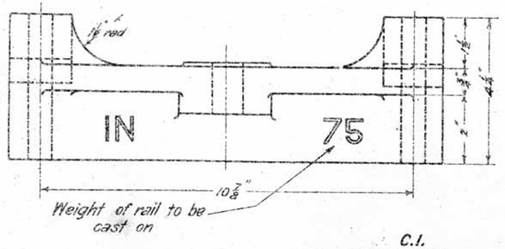

Supplied with
9H183 rivetted in position
2–5H292 8" long & locknut
1"×⅛" Washer

66lb X=2¼" 4N209
75lb X=1¾" 3N209
80lb X=1½" 2N209

C.I.
29·9·25 INSIDE CLIP

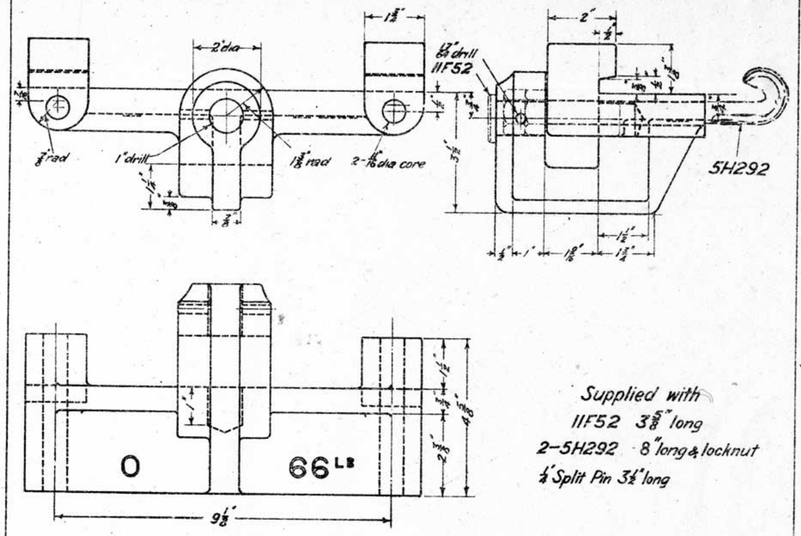

Supplied with
11F52 3⅜" long
2–5H292 8" long & locknut
¼" Split Pin 3½" long

C.I.
29·9·25 66lb OUTSIDE CLIP 5N209

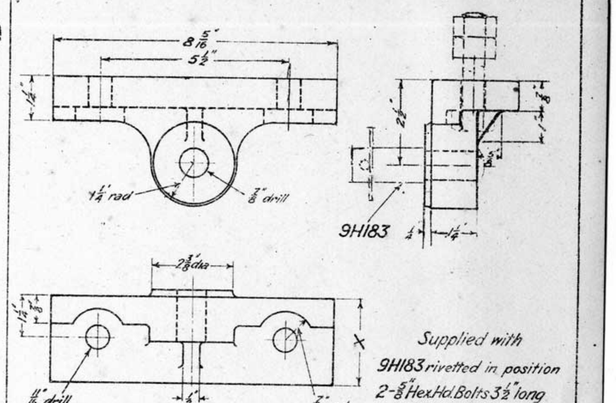

Supplied with
9H183 rivetted in position
2-⅝" Hex Hd Bolts 3½" long
& lock nut
1"×⅛" Washer

HEEL X-3" 9N209
C.I. MIDDLE X-2½" 8N209
29·9·25 100lb POINT BLADE CLIP TOE X-2" 7N209

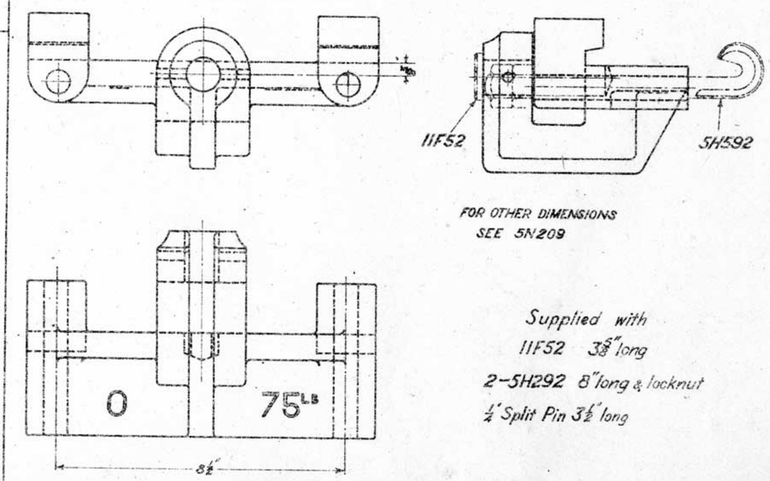

FOR OTHER DIMENSIONS
SEE 5N209

Supplied with
11F52 3⅜" long
2–5H292 8" long & locknut
¼" Split Pin 3½" long

C.I.
29·9·25 75lb OUTSIDE CLIP 6N209

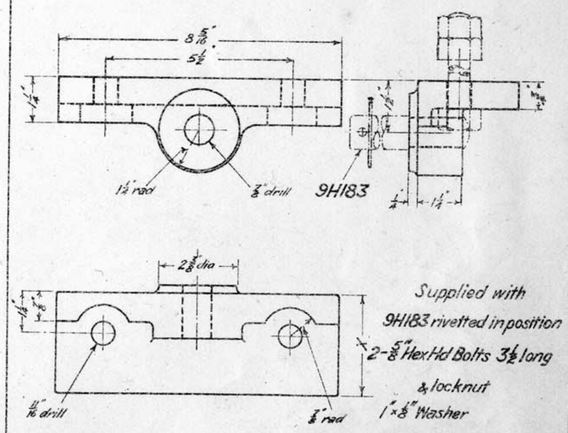

Supplied with
9H183 rivetted in position
2-⅝" Hex Hd Bolts 3½" long
& locknut
1"×⅛" Washer

HEEL X-3" 12N209
C.I. MIDDLE X-2½" 11N209
29·9·25 80lb POINT BLADE CLIP TOE X-2" 10N209

VICTORIAN RAILWAYS
LOCKBAR
"DIRECT" LIFT TYPE 'A'
DETAILS OF CLIPS

Chief Eng. & Signals	Drawn from sample	Traced by
		GWS

N209

RAILS	ON SLEEPER	ON STOCK RAIL	WITH CHECK RAIL	ON POINT BLADE — TOE	ON POINT BLADE — MIDDLE	ON POINT BLADE — HEEL
100 lb	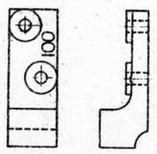 29-9-25 REST 1F2101	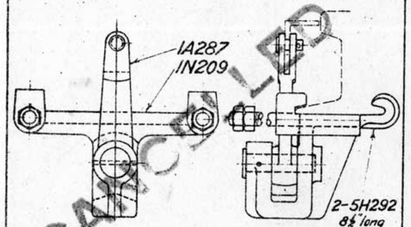 29·9·25 1N210	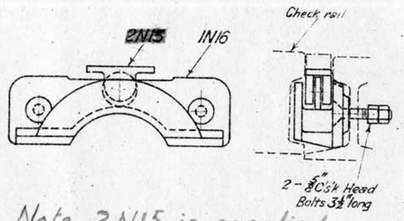 Note 2N15 is supplied with bars 29·9·25 2N210	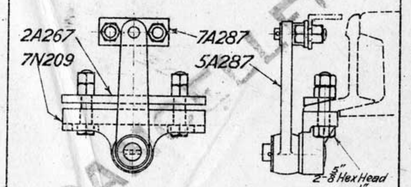 29·9·25 3N210	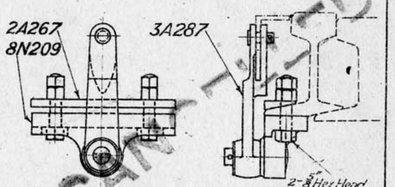 29·9·25 4N210	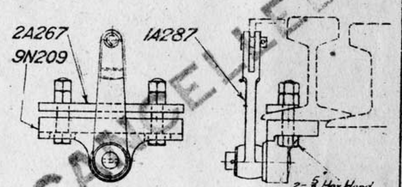 29·9·25 5N210
80 lb	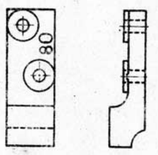 29-9-25 REST 2F2101	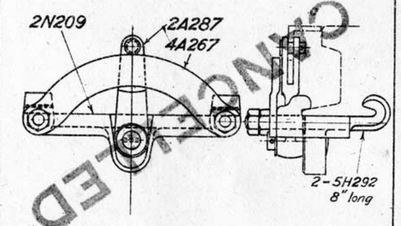 29·9·25 6N210	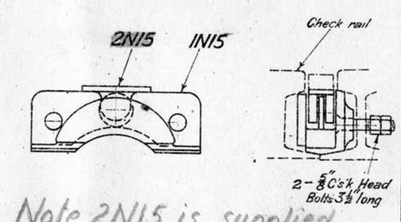 Note 2N15 is supplied with bars 29·9·25 7N210	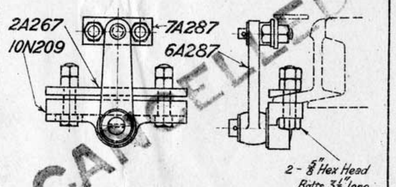 29·9·25 8N210	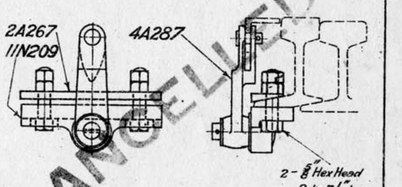 29·9·25 9N210	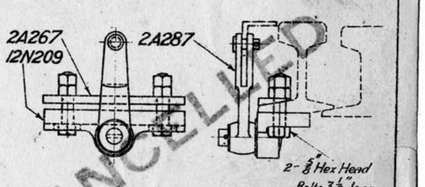 29·9·25 10N210
75 lb	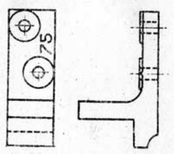 29-9-25 REST 3F2101	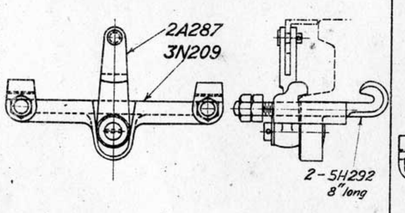 29·9·25 11N210	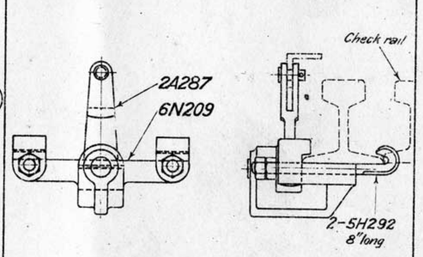 29·9·25 12N210			
60 & 66 lb	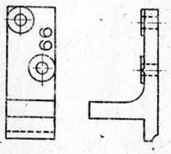 29-9-25 REST 4F2101	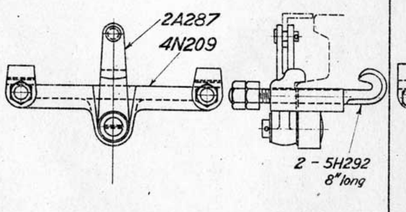 29·9·25 13N210	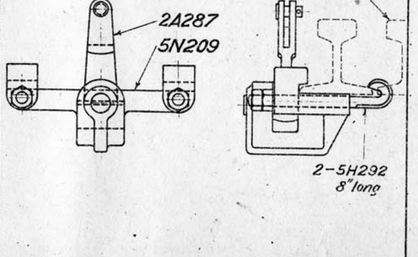 29·9·25 14N210			

CANCELLED

All items marked cancelled not to be manufactured.
S&T. Memo 24/8/53.

See Blueprint for additional Parts.

For application	VICTORIAN RAILWAYS — CROSSOVER & CROSSING — CROSSBAR	Chief Engr. Sanction 4-1